Telecommunications Transmission Engineering

Volume 3
Networks
and
Services

AT&T

Telecommunications Transmission Engineering

Telecommunications Transmission Engineering

Volume 3 — Networks and Services

Second Edition

Technical Personnel
American Telephone and Telegraph Company,
Bell Telephone Companies,
and
Bell Telephone Laboratories

Bell System Center for Technical Education

Prepared for Publication by
Western Electric Company, Inc.
Technical Publications
Winston-Salem, North Carolina

FIRST EDITION 1975

SECOND EDITION 1977

Printed in the United States of America

Telecommunications
Transmission
Engineering

Introduction

Communication Engineering is concerned with the planning, design, implementation, and operation of the network of channels, switching machines, and user terminals required to provide communication between distant points. Transmission Engineering is the part of Communication Engineering which deals with the channels, the transmission systems which carry the channels, and the combinations of the many types of channels and systems which form the network of facilities. It is a discipline which combines many skills from science and technology with an understanding of economics, human factors, and system operations.

This three-volume book is written for the practicing Transmission Engineer and for the student of transmission engineering in an undergraduate curriculum. The material was planned and organized to make it useful to anyone concerned with the many facets of Communication Engineering. Of necessity, it represents a view of the status of communications technology at a specific time. The reader should be constantly aware of the dynamic nature of the subject.

Volume 1, *Principles,* covers the transmission engineering principles that apply to communication systems. It defines the characteristics of various types of signals, describes signal impairments arising in practical channels, provides the basis for understanding the relationships between a communication network and its components, and provides an appreciation of how transmission objectives and achievable performance are interrelated.

Volume 2, *Facilities,* emphasizes the application of the principles of Volume 1 to the design, implementation, and operation of transmission systems and facilities which form the telecommunications

network. The descriptions are illustrated by examples taken from modern types of facilities most of which represent equipment of Bell Laboratories design and Western Electric manufacture; these examples are used because they are familiar to the authors.

Volume 3, *Networks and Services,* shows how the principles of Volume 1 are applied to the facilities described in Volume 2 to provide a variety of public and private telecommunication services. This volume reflects a strong Bell System operations viewpoint in its consideration of the problems of providing suitable facilities to meet customer needs and expectations at reasonable cost.

The material has been prepared and reviewed by a large number of technical personnel of the American Telephone and Telegraph Company, Bell Telephone Companies, and Bell Telephone Laboratories. Editorial support has been provided by the Technical Publications Organization of the Western Electric Company. Thus, the book represents the cooperative efforts of many people in every major organization of the Bell System and it is difficult to recognize individual contributions. One exception must be made, however. The material in Volume 1 and most of Volume 2 has been prepared by Mr. Robert H. Klie of the Bell Telephone Laboratories, who was associated in this endeavor with the Bell System Center for Technical Education. Mr. Klie also coordinated the preparation of Volume 3.

C. H. Elmendorf, III
Assistant Vice President —
Transmission Division.
American Telephone and Telegraph Company

Volume 3 — Networks and Services

Preface

Overall Bell System objectives are to provide high-quality, low-cost communications services as needed with a fair return on investment; this volume presents transmission-related technical and administrative information to help achieve these objectives.

Service quality is provided by meeting established transmission objectives and by ensuring adequate reliability. Networks and services must be engineered to meet design objectives; facilities and circuits must be constructed to meet the design objectives. Facilities and circuits must also be maintained so that deviations from the engineered objectives are not excessive; the effects of failures are thus minimized. Transmission, maintenance, and reliability objectives are discussed throughout this volume as they relate to various kinds of networks and services.

The provision of a service when it is needed often requires meeting near-immediate initial service dates with short intervals available for procurement of material and installation of facilities and equipment. To establish satisfactory minimum intervals requires that functions directly associated with the process of filling specific service requests be clearly defined and efficiently configured. These functions are discussed separately for designed special services and for services provided by the switched message network.

The control of costs is an integral part of the process of deciding how to provide and maintain any network. The process is one of compromise, i.e., of striking the best balance between customer satisfaction, plant performance capability, and cost.

Volume 3 builds on the principles and facilities discussed in Volumes 1 and 2 respectively. The definition and characterization of impairments, their effect on services as measured by grade of service, the methods of setting objectives, and a knowledge of the physical plant used to provide services are necessary to an understanding of the specific objectives and maintenance methods covered in this volume. In essence, the provision of networks and services represents the attainment of a basic Bell System objective.

Section 1 discusses the overall structure and features of the switched public message network which consists of loops, trunks, and switching machines configured into a hierarchy planned for the efficient handling of telephone calls. Local and toll portions of the network are discussed as are the transmission plans for each.

Loops are the circuits which connect telephone station sets to local central offices and thus to the rest of the message network. Their performance characteristics are important because each connection generally involves at least two loops. Section 2 discusses the characteristics, range limits, and design considerations for the provision of loops.

Trunks provide transmission paths to interconnect switching machines. Section 3 defines the various trunk types and then discusses traffic engineering concepts which establish the methods used to determine the required number of trunks. Design criteria are different for local trunks, toll trunks, and auxiliary service trunks and are treated in separate chapters. Consideration of through and terminal balance techniques, used in the control of echo and singing impairments, is also included.

The many types of special services are introduced and defined in Section 4. Design criteria for the principal switched and private line special services types are included.

Transmission performance must be monitored to ensure that quality standards are met, to detect trends, and to develop plans for improvement. Section 5 covers the measurement plans, both internal and external to the telephone company, and the maintenance, planning, engineering, and management functions required in operating the complex facilities network used for the provision of telecommunications services.

Contents

Telecommunications Transmission Engineering

Section 1

The Message Network

Section 1 is devoted to a review of the purposes and functions of the message network because of its fundamental importance and central role in meeting many of today's telecommunications needs. In addition, it provides background and understanding of the overall functions and transmission objectives which are prerequisite to consideration of the loop and trunk components of the network.

Chapter 1 discusses the hierarchical structure, principles, and objectives which are fundamental to the operation of the entire message network. Chapter 2 discusses further service considerations that result in the formation of supplementary hierarchical structures for metropolitan areas within the overall message network. These structures have been designed to serve the unique population densities of the metropolitan areas most economically while still fulfilling the broader message network objectives intended to provide overall service performance which meets the most modern communication standards. These two chapters also provide an overview of the relationships between the various trunk networks that have evolved and the switching systems necessary for efficient interconnection and utilization of the complex network of transmission paths.

Chapter 1

The Network Plan for Distance Dialing

The toll portion of the switched network, commonly known as the direct distance dialing (DDD) network, provides long distance telephone connections among virtually all of the more than 150 million telephones in the United States, Canada, and some Caribbean islands. This network, which is operated jointly by the Bell System, Independent Telephone Companies, and other administrations, handles over 50 million long distance calls each business day. About 90 percent of these calls are dialed directly by the customers; most of the remainder are dialed by operators. About 2000 toll switching offices are interconnected by nearly 900,000 intertoll trunks.

An overview of the switching and transmission plans for the toll portion of the message network must include descriptions of the switching hierarchy, classes of switching offices, types of trunks, and features that permit efficient call routing. It must also describe network transmission requirements and relate them to trunk loss and office balance. These requirements have been derived from the via net loss plan and have been applied to a new transmission plan called the *fixed loss plan.*

1-1 THE TOLL SWITCHING PLAN

Large amounts of traffic between any two central offices are generally routed most economically over direct trunks; however, when the volume of traffic between offices is small, use of direct trunks may not be economical. In these cases, traffic originating from several wire centers destined for one office may be concentrated at intermediate switching machines which connect together two or more

trunks to build up the required connections. Conversely, where concentrating networks have been established, the amount of traffic between any two offices may become large enough to support direct trunks economically. Thus, an economic balance is maintained between the cost of trunks and the cost of switching machines.

The Hierarchical Plan

The switching plan for distance dialing consists of a hierarchy of switching offices interconnected by trunk groups in a pattern that provides rapid and efficient handling of long distance traffic. The hierarchical routing discipline provides for the concentration of traffic and permits complete interconnection of all offices in the network. The principle of automatic alternate routing is used to provide a low incidence of call blockage with reasonable trunk efficiency. The hierarchical structure of the switching plan is shown in Figure 1-1.

Switching Offices. Under the DDD switching plan, each office involved is classified and designated according to its switching function, its interrelationship with other switching offices, and its transmission requirements. There are five ranks in the hierarchy, as shown in Figure 1-1: the rank of the office is given by its class number with class 1 the highest rank. Offices that perform switching functions of more than one rank are assigned the highest classification for the functions that they perform. Also, these offices must meet the transmission requirements of the higher classification.

End Offices. The central office entity where customer loops are terminated is called an end office and is designated class 5. An end office may be physically located in the same building that houses an office of higher classification, and in some cases end office and toll office functions are performed by one switching machine. A class 5 equipment entity may be a subgroup of originating equipment, such as a marker group in a No. 5 crossbar system. However, the offices are considered to be separate entities and customer loops are terminated at the class 5 office only.

Toll Centers and Toll Points. The switching centers which provide the first stage of concentration for intertoll traffic from end offices are called toll centers or toll points and are designated as class 4C and class 4P offices, respectively. The principal function of these class 4 offices is to connect end offices to the intertoll portion of the network. The toll center is an office at which operator assistance is provided

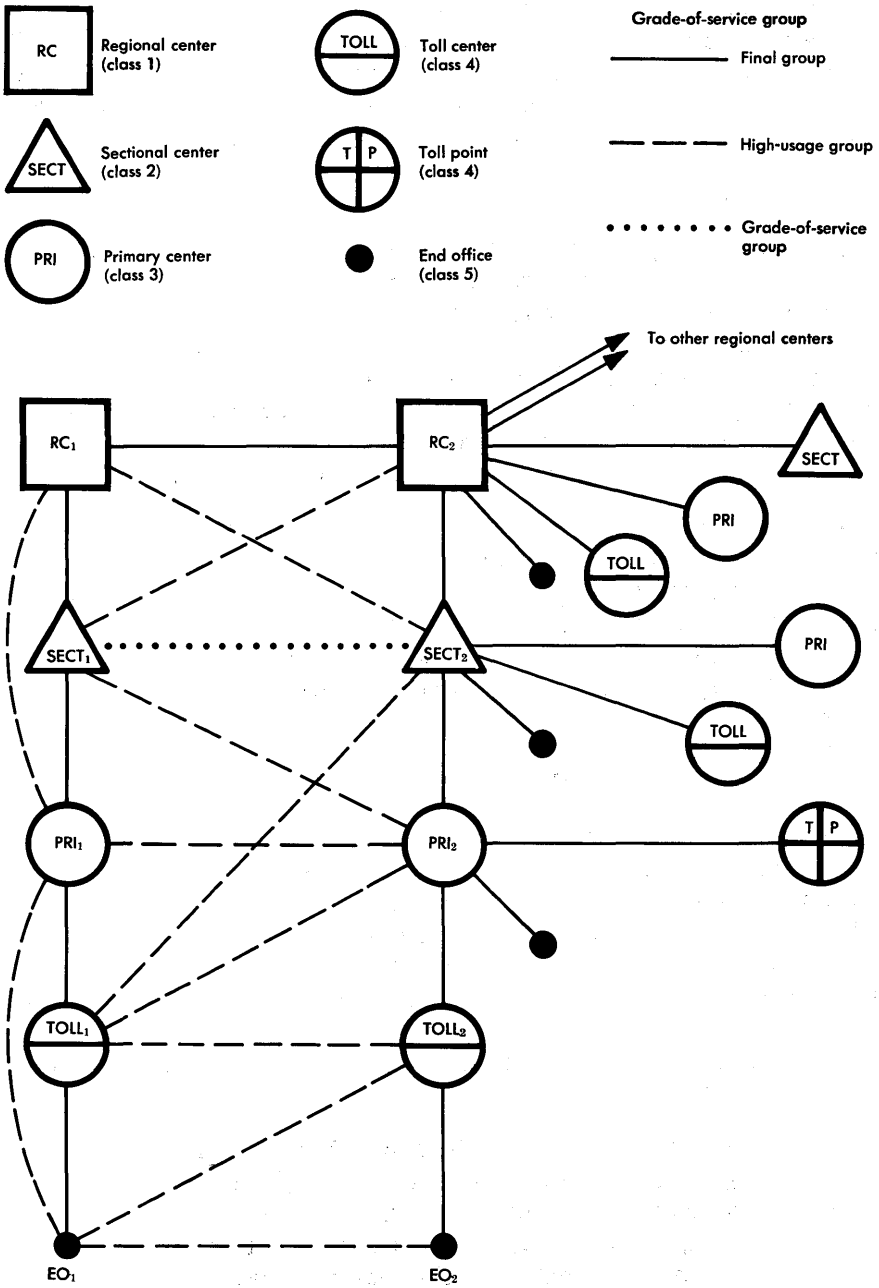

Figure 1-1. Hierarchial network switching plan for distance dialing.

to complete incoming calls in addition to other traffic operating functions. The toll point is an office where operators handle only outward calls or where switching is performed without operators.

Control Switching Points. Regional centers, sectional centers, and primary centers (class 1, 2, and 3, respectively) are the control switching points (CSPs) of the DDD network. The control switching points are key switching offices at which intertoll trunks are interconnected. To qualify as a CSP, a switching office of a given rank must have at least one office of the next lower rank homing on it and must meet certain switching and transmission requirements.

Switching Areas. The serving area of a switching office of any rank is comprised of the areas of all the offices that home on it. Thus, there are areas that correspond to each rank in the switching hierarchy. For example, each regional center serves a geographical area known as a region. Each region is subdivided into smaller areas known as sections, whose principal switching offices are called sectional centers. Similarly, sections are subdivided into small areas served by primary centers. Figure 1-2 shows the two Canadian and ten U.S. regions and the numbering plan areas (NPAs) included in each.

Classification of Trunks and Trunk Groups. Trunks may be classified in several ways according to traffic types and uses or transmission characteristics. Traffic classifications indicate the manner in which trunks are used in the switching hierarchy. Transmission classifications are based on positions in the hierarchy.

Basic Transmission Types. The DDD network is made up of three types of trunk groups distinguished by their respective transmission design requirements. A *toll connecting trunk* connects a class 5 office to any office of higher rank, an *intertoll trunk* connects any class 1 through class 4 office with any other class 1 through class 4 office, and a *direct trunk* interconnects two class 5 offices. The direct trunks may carry either local or toll traffic.

Final Trunk Groups and Homing Arrangements. Final trunk groups are shown by the solid lines in Figure 1-1. One, and only one, final group is always provided from each office to an office of higher rank and the lower ranking office is said to home on the higher. Class 5, 4, and 3 offices must always home on an office of higher rank but not necessarily the next higher rank, as shown at RC_2 in the figure.

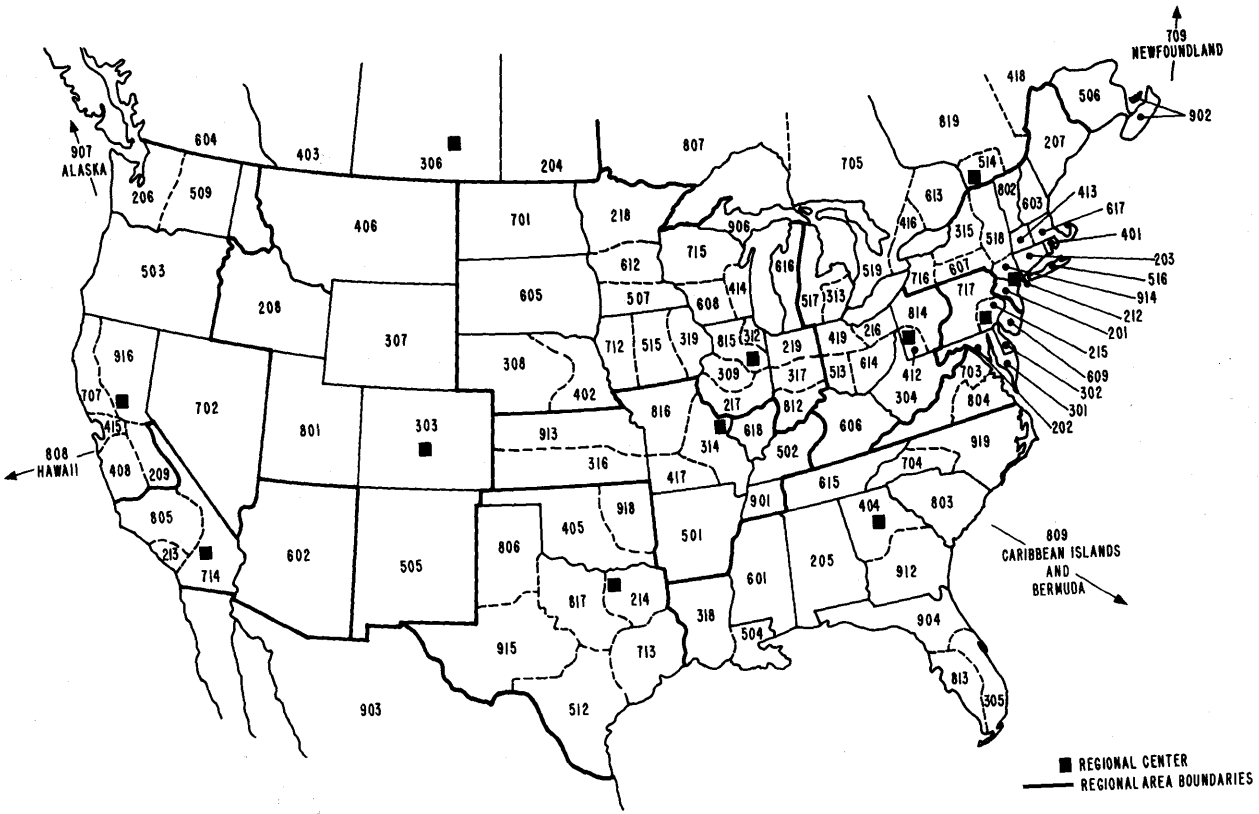

Figure 1-2. Numbering plan areas (including regional area boundaries).

Each final group is the route of last resort between its terminal offices; i.e., there is no alternate route and calls failing to find an idle trunk in the group are not completed. Consequently, each final trunk group in the network is engineered for a low probability of blocking, so that on the average no more than a small fraction of the calls offered to such a group in the busy hour find all trunks busy. Current objectives for final groups are that not more than one call in a hundred shall be blocked by a no-circuit condition in the busy hour. Final trunk groups are required to interconnect the ten U.S. and two Canadian regional centers.

A series of final trunk groups connected in tandem constitute a final route chain. For example, the final route chain between EO_1 and RC_1 has four final groups; the final route chain between class 5 offices EO_1 and EO_2 in Figure 1-1 consists of nine final groups which represent the path of last resort of a call between these offices.

High-Usage Trunk Groups. In addition to the final trunk groups, direct high-usage trunks may be provided between offices of any class where the volume of traffic and economics warrant and where the necessary automatic alternate routing equipment features are available. However, the choice of traffic carried by these trunks should be consistent with routing practices. High-usage trunk groups carry most, but not all, of the offered traffic in the busy hour. Overflow traffic is offered to an alternate route. The proportion of the offered traffic that is carried on a direct high-usage trunk group in each case is determined by the relative costs of the direct route and the alternate route, including the additional switching cost on the alternate route.

Grade-of-Service Group. A trunk group that would normally be in the high-usage category but for service or economic reasons is engineered for a low probability of blocking and not provided with an alternate route is called a grade-of-service group. These groups (formerly called full groups) effectively limit the hierarchical final route chain for only certain items of traffic but do not change the homing arrangements of their terminal offices. The group shown in Figure 1-1 between $SECT_1$ and $SECT_2$ would be in the final route chain for only those end offices that home on these sectional centers. Traffic destined for other locations would be switched via the high-usage and final groups to RC_1 and RC_2.

Call Routing

Calls carried by the network must be routed according to a standard plan or set of rules. Elements of the routing plan include the numbering plan, routing codes, and switching office capabilities as well as the basic network configuration.

Numbering Plan. An essential element of the DDD network operation is the numbering plan whereby each main station telephone in the entire network is identified by a unique 10-digit number. The first three digits of this number are the NPA code. The remaining 7-digit number is made up of a 3-digit central office code and a 4-digit station number.

Destination Code Routing. The NPA and office codes of the numbering plan comprise a unique designation or network address for each central office. A call can be routed from any location in the network to any office using the network address of the destination office. This process is known as destination code routing and the NPA and office codes are called routing codes.

There are other routing codes in addition to the NPA and central office codes. System group codes are 3-digit codes used for routing traffic on a system-wide basis where calls cannot be routed by NPA code. Nonsystem group codes are 1-, 2-, or 3-digit codes which are used to meet special local needs such as police and fire calls. There are also standard 3-digit service codes such as operator codes, test codes, and terminating toll center codes.

CSP Switching Requirements. From a routing code, a switching system must be able to interpret the address information, determine the route to or toward the destination, and often must manipulate the codes in various ways in order properly to advance the call. The control switching points must meet certain switching system requirements for efficient call routing, including storing of digits, variable spilling (deletion of certain digits when not required for outpulsing), prefixing of digits when required, code conversion (a combination of digit deletion and prefixing), translation of three or six digits, and automatic alternate routing.

Call Routing Pattern. In the following discussion, the term "final route chain" is applied to the series of final groups in tandem between a class 5 office and its home class 1 office. The term "overall final route chain" is applied to the final groups between two class 5 offices.

The routing pattern for a call between two points consists of a combination of the overall final route chain between the originating and terminating offices and high-usage groups between switching offices in the chain. A call may be switched only at offices on the overall final route chain. A call is routed only upward along the originating final route chain shown in Figure 1-1 and only downward in the terminating final route chain. It may be offered to a high-usage trunk group which bypasses one or more switching centers along the chain provided that the call progress toward its destination. For transmission and administration reasons, calls originating in one final route chain are not routed along a second final route chain to destinations in a third chain. This normal routing pattern is sometimes abrogated to accommodate network traffic conditions caused by natural or manmade emergencies.

Route Selection Guidelines. In addition to the fundamentals of call routing, other principles are applied in assigning routes for traffic on existing trunk groups or in establishing new high-usage groups. These guidelines are used to provide economical handling of traffic; they also have a favorable effect on network transmission performance. The guidelines are:

(1) Traffic should be handled on a direct route whenever such a route is feasible and economical. The ability to overflow from the direct to an alternate route should be provided.

(2) In general, a direct high-usage group may be established between offices of any rank when there is a sufficient volume of traffic to support the group. Also, high-usage trunking should be developed to the maximum economical extent in order to reduce the requirements of intermediate switching by routing traffic at as low a level in the hierarchy as possible. To help achieve the latter objective, there is a restriction on the establishment of high-usage trunk groups and the traffic routed over them. By this rule, called the *one-level inhibit rule,* the switching functions performed for the first-routed traffic at either end of the high-usage trunk group may differ from those at the other end by only one class number. For example, a trunk group may be established between an end office (class 5 switching function) and a distant regional center *but only* for the class 4 switching function performed by the regional center switching system. A regional center acts as a toll center for the end offices homing on it.

(3) In general, traffic between any pair of switching offices, class 1 through class 4, should have the same first choice route in both directions. This rule becomes less applicable as more metropolitan areas acquire switching networks that use directional alternate routing.

(4) The number of intermediate switches should be kept at a minimum. When there is a choice of routes whose cost differences are not significant, the route with the fewest switches should be selected.

(5) When there is a choice of routes with an equal number of switches and insignificant cost differences, that route should be selected in which switching is done at the lowest level in the hierarchy.

Example 1-1: Call Routing

Figure 1-3 illustrates a routing pattern that might be involved in completing a call from EO_1 to EO_2. In this example, $TOLL_1$ has trunks to PRI_1 only; hence, the call is routed to that primary center. At PRI_1 the call is offered first to the high-usage group to PRI_2. At PRI_2 the switching equipment selects an idle trunk in the final group to $TOLL_2$ and the call is routed to the called customer at EO_2.

If all the trunks in the high-usage group between PRI_1 and PRI_2 are busy, the call is next offered to the high-usage group between PRI_1 and $SECT_2$. At $SECT_2$ there is a choice of two routings: (1) via high-usage trunks to $TOLL_2$ or, if all trunks are busy, (2) over the two final trunk groups, $SECT_2$-to-PRI_2 and PRI_2-to-$TOLL_2$.

In the event all trunks in the group between PRI_1 and $SECT_2$ are busy, the call is next offered to the final group to $SECT_1$. There are available at PRI_1 other high-usage groups to RC_2 and RC_1; however, these are intended for terminal and certain other traffic items that must be so routed. Traffic routed via PRI_1 should not be offered directly to regional centers if there are other lower ranking switching centers in the final route path to which the traffic has not yet been offered. It is desirable to restrict the switched load to centers of lower rank, even though

the service advantages of other alternate route possibilities are not realized. At $SECT_1$ there is a choice of four routings in the following sequence:

(1) via the $SECT_1$-to-PRI_2 high-usage group,

(2) via the $SECT_1$-to-$SECT_2$ high-usage group,

(3) via the $SECT_1$-to-RC_2 high-usage group,

(4) via the final group from $SECT_1$ to RC_1.

The routing pattern described assumes one set of conditions and could vary to the extent that economics and plant layout would offer a different set of high-usage groups.

Automatic Alternate Routing. The DDD trunking network is so designed that direct high-usage trunk groups are provided as a first choice for traffic between switching offices when such groups are warranted by the traffic load. These high-usage groups are engineered so that a predetermined portion of the busy-hour traffic is forced to seek another route where it can be carried at less cost with little or no delay. A call which finds an all-trunks-busy condition on the first route tested is automatically offered in sequence to one or more alternate routes for completion, with the last choice being a final group. This process is called automatic alternate routing.

The number of trunks to be provided in a direct high-usage group depends upon the offered load, the efficiency of added trunks in the alternate route, and the cost ratio of the alternate route to the direct route. The cost ratio is the relationship between the average incremental annual costs for transmission and switching facilities for one added trunk path in the alternate route to like costs of the facilities for a trunk in the direct route.

1-2 TRANSMISSION PLAN

The toll switching plan provides for the handling of most traffic with a minimum of switching. Nevertheless, the most serious impact of the switching plan on transmission is that different numbers and combinations of trunks may be used on successive calls (even between the same two telephones) and that as many as nine trunks may be

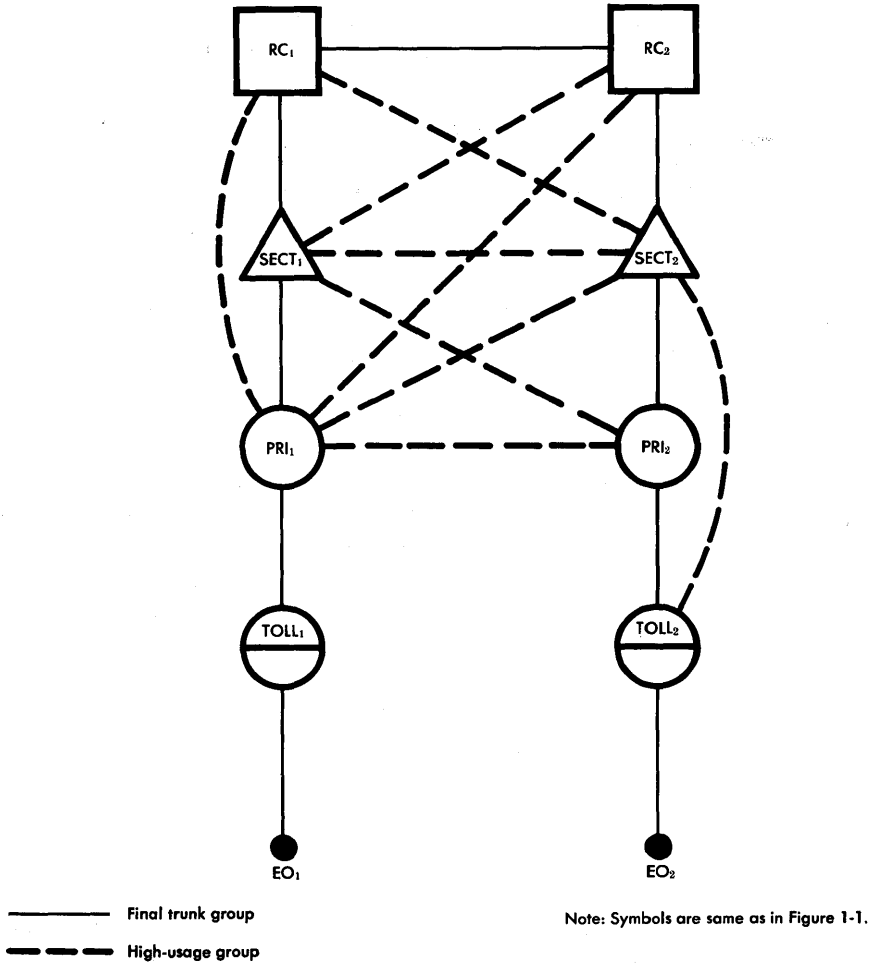

Figure 1-3. Switching plan routing pattern.

connected together on some DDD calls. If satisfactory performance is to be provided, the transmission characteristics of every trunk must be controlled and the plan must accommodate the varying numbers of trunks used without introducing large transmission differences (contrast) on successive calls.

The transmission design of the network must include a requirement of low trunk losses if the requirements of satisfactory speech volumes and low contrast are to be met. However, other factors, such

as the provision of margin against singing and echo, tend to make trunk losses high. A compromise design has been selected that requires the design and operation of every trunk at the lowest loss consistent with echo and singing control, the assignment of trunks in the network hierarchy in accordance with their transmission capabilities, and the implementation and operation of a program of trunk transmission maintenance designed to assure that trunks meet their requirements and are kept as uniform as possible.

Network Transmission Design

The transmission design of the network is based on the use of 500-type station sets connected to class 5 offices by means of two-wire customer loops. This two-wire loop operation creates conditions of low return loss that limit the minimum loss at which network trunks can be operated without echo or singing. These problems are controlled by the via net loss (VNL) design and in some cases by the use of echo suppressors.

Via Net Loss Design. The relationship between the minimum loss required to control echo and the round-trip delay between class 5 offices is shown in Figure 1-4. This relationship is the basis for VNL design [1]. Inspection of Figure 1-4 shows that as the number of trunks is increased, an increase in loss of 0.4 dB per added trunk is required. This increment compensates for the greater loss variability that occurs with an increased number of trunks in the connection. The VNL design rules are applied to all trunks in a connection when the round-trip delay in the overall connection is less than 45 milliseconds. The 45-ms restriction is imposed to limit the maximum trunk loss to a value that permits satisfactory received speech volume. When the round-trip delay is more than 45 ms, one of the trunks in a connection is equipped with an echo suppressor in accordance with application rules. It is recommended that interregional trunks equipped with echo suppressors be operated at zero loss.

Via Net Loss and Via Net Loss Factors. The overall connection loss (OCL) between class 5 offices, shown in Figure 1-4, is given by the expression

$$\mathrm{OCL} = 0.102\,D + 0.4\,N + 5.0 \qquad \mathrm{dB} \tag{1-1}$$

where D is the round-trip echo path delay in milliseconds and N is the number of trunks in the connection. In order that each trunk

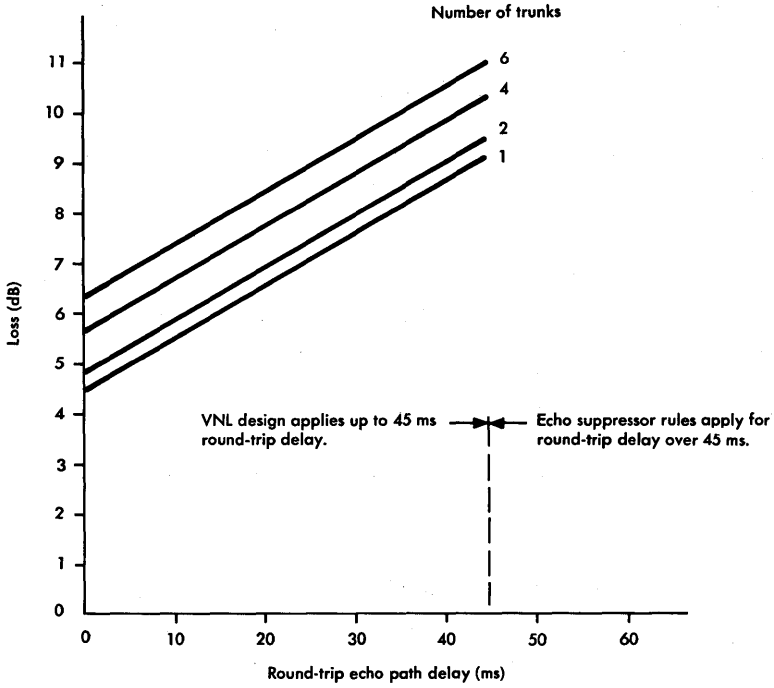

Figure 1-4. Overall connection loss versus echo path delay between class 5 offices.

operate at the lowest practical loss, 2.5 dB of the 5.0 dB constant is assigned to each toll connecting trunk in the connection. The 2.5-dB loss includes an allowance of 0.5 dB for the loss in battery supply equipment formerly allocated to loops. The remaining loss is assigned to all trunks in the connection, including the toll connecting trunks. This remainder is called via net loss and is expressed as follows:

$$\text{VNL} = 0.102\,D + 0.4\,N \qquad \text{dB.} \tag{1-2}$$

Then, for each trunk in a connection

$$\text{VNL} = 0.102\,D_t + 0.4 \qquad \text{dB} \tag{1-3}$$

where D_t is the round-trip echo path delay in milliseconds for the trunk.

Since the echo path delay of a trunk is approximately proportional to its length, Equation (1-3) is usually given in terms of trunk length and a via net loss factor (VNLF) for the trunk facility type as

$$\text{VNL} = \text{VNLF} \times \text{trunk length in miles} + 0.4 \quad \text{dB} \qquad (1\text{-}4)$$

where VNLF = (2 × 0.102 ÷ velocity of propagation in miles per ms) dB per mile. Equation (1-4) is used in VNL calculations. For example, assume that the VNL of a 600-mile intertoll trunk using all carrier facilities is to be determined. The VNLF for carrier facilities is 0.0015 dB per mile. Therefore, for this trunk,

$$\text{VNL} = (0.0015 \times 600) + 0.4 \text{ dB} = 1.3 \quad \text{dB.}$$

Echo Suppressor Use. Echo suppressors are four-wire signal-activated devices which insert a high loss in the return echo path when speech signals are transmitted in the direct path. Since tandem echo suppressors may produce additional degradation in received speech, the application rules permit only one echo suppressor in a connection. This restriction can readily be met because of the hierarchical structure of the network and the finite size of the regional center areas. The maximum echo path delay within a region is usually low enough that echo suppressors are not required for intraregional trunks. However, it is possible to exceed 45 milliseconds delay for connections between points in different regional center areas. Therefore, echo suppressors may be required on certain regional center-to-regional center trunks. In addition, echo suppressors should be used on interregional high-usage intertoll trunks and on interregional toll connecting and end office toll trunks more than 1850 miles long.

Trunk Loss Objectives With VNL Design. The VNL objectives for toll network trunk losses are stated in terms of inserted connection loss (ICL), defined as the 1000-hertz loss inserted by switching the trunk into an actual operating connection.

Intertoll Trunks. The inserted connection loss design objectives for intertoll trunks are shown in Figure 1-5. The trunks that require echo suppressors are certain regional center-to-regional center trunks and the interregional high-usage and full groups more than 1850 miles long.

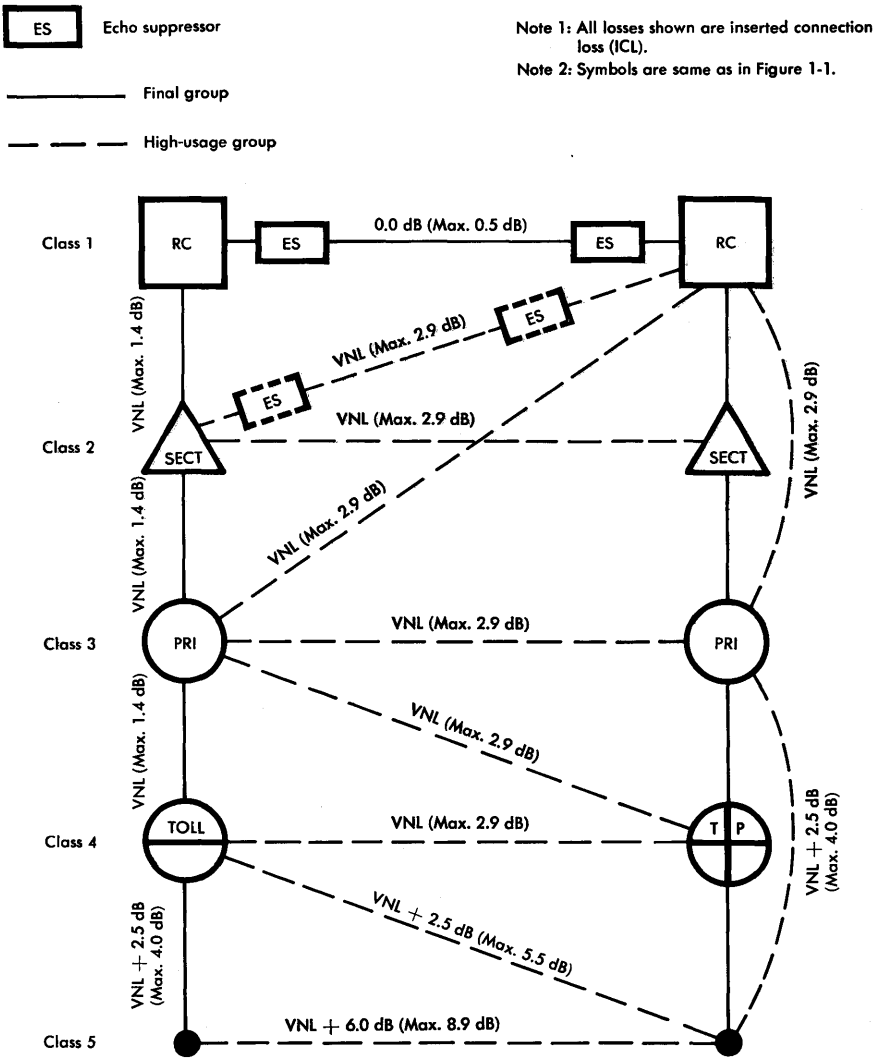

Figure 1-5. Trunk losses with VNL design.

Toll Connecting Trunks. In previous discussion, the theoretical design loss was indicated to be VNL + 2.5 dB for toll connecting trunks. The inserted connection loss objectives for toll connecting trunks are shown in Figure 1-5.

If an interregional toll connecting trunk is more than 1850 miles long, it should be equipped with an echo suppressor and operated at an inserted connection loss of 3.0 dB.

End Office Toll Trunks. The inserted connection loss design objective for end office toll trunks between class 5 offices is VNL + 6.0 dB with a maximum of 8.9 dB.

Through and Terminal Balance. In the development of VNL design, the only reflections considered to be significant from an echo and singing standpoint were those at the class 5 offices. There are no intermediate echoes if the entire connection between class 5 offices including the switching paths is four-wire. However, most class 4 offices and many control switching points employ two-wire switching systems as shown in Figure 1-6. At two-wire offices, special procedures must be implemented to reduce reflections to a point where they approximate the equivalent of four-wire operation. Also, at four-wire switching offices, reflections caused by two-wire toll connecting and switchboard trunks must be controlled.

CLASS	FOUR-WIRE	TWO-WIRE
1	10	0
2	63	3
3	89	126
4	16	755

Figure 1-6. Approximate number of Bell System toll switching offices, January 1, 1977.

In order to achieve the above objective, through balance is required at two-wire control switching points when intertoll trunks are switched together for through connections. Also, terminal balance is required at all switching offices, two-wire or four-wire, when an intertoll trunk is switched to a toll connecting trunk.

Through Balance at Two-Wire CSPs. All intertoll trunks must be provided on four-wire facilities. At two-wire control switching points, four-wire terminating sets are used to convert these trunks to two-wire for switching. On a connection of two intertoll trunks through a two-wire control switching point, reflected currents arise due to the imbalance between the impedances of the balancing network and the two-wire side of each four-wire terminating set. This

two-wire impedance is the two-wire input impedance of the other four-wire terminating set involved in the connection as modified by the office equipment and cabling. By adding a single value of capacitance across each four-wire terminating set balancing network in the office and equalizing the capacitance of office cabling for all through connections, through balance adequate for VNL operation of all trunks can be achieved.

Terminal Balance. The balance at the point where an intertoll trunk is switched to a toll connecting trunk is called terminal balance. Generally, it is the balance between a four-wire terminating set balancing network and a toll connecting trunk appropriately terminated at the class 5 office. Terminal balance improvements are made by adjustment of the toll connecting trunk impedance so that it more closely resembles the relatively fixed impedance of the four-wire terminating set network. In addition, at two-wire offices, the effects of office cabling must be treated in a manner similar to that used for through balance. The procedures and requirements for terminal balance testing fall into two major categories, those for two-wire and those for four-wire toll connecting trunk facilities.

Matching Office Impedance. With the exception of a few isolated cases, the switching office impedances used in the Bell System are 900 ohms for all class 5 offices and 600 ohms for all toll offices. One exception is notable. The impedance used for No. 5 crossbar tandem offices is 900 ohms. These impedance values do not reflect actual central office switching equipment impedances but are standard values based on average impedances of trunk and subscriber facilities connected to the office.

Trunk impedances must match both local and toll office impedances in order to meet terminal balance requirements. At class 1, 2, 3, and 4 offices, all intertoll and toll connecting trunks must be designed to the common office impedance. At class 5 offices, incoming and outgoing trunk circuits must be designed to match a compromise value of impedance, 900 ohms, representing a nominal value for subscriber loop facilities.

Fixed Loss Plan. With the introduction of digital switching machines and their integration with digital transmission facilities, the loss plan for the switched message network is to be modified so that a fixed 6-dB loss will be specified for all toll connections. In this fixed loss

plan, each toll connecting trunk is allocated 3 dB of loss and each intertoll trunk is to to operated at 0-dB loss. These loss objectives are to be applied to the ultimate all-digital network; during the transition from the predominantly analog network to the ultimate digital network, compromise loss objectives will be applied [2].

Transmission Requirements for a Control Switching Point

For an office fully to qualify as a control switching point from a transmission standpoint, the following requirements must be met:

(1) All intertoll trunks terminating in the control switching point must be designed for VNL.

(2) All toll connecting trunks must be designed to VNL + 2.5 dB.

(3) Terminal balance objectives must be met and verified by actual measurement on all toll connecting trunks.

(4) For two-wire control switching points, through balance requirements must be met by actual measurement on all intertoll trunks.

Maintenance Considerations

In the development of the VNL plan, only a small variation of trunk losses from assigned values was considered. In order to meet all the requirements of the VNL plan, a trunk should not be placed in service unless it meets all of the applicable circuit order requirements; tests should be performed at sufficiently frequent intervals to assure that transmission difficulties are detected before they can have significant effect on network performance. In addition, troubles found by tests and investigations should be corrected promptly. Otherwise, consideration should be given to removing the trunk from service until remedial measures can be taken.

REFERENCES

1. American Telephone and Telegraph Co., *Telecommunications Transmission Engineering,* Volume 1, Second Edition (Winston-Salem, N. C.: Western Electric Co., Inc., 1977), Chapter 25.

2. American Telephone and Telegraph Co., *Telecommunications Transmission Engineering,* Volume 1, Second Edition (Winston-Salem, N. C.: Western Electric Co., Inc., 1977), pp. 599-601.

3. Wernander, M. A. "Systems Engineering for Communications Networks," *IEEE Transactions on Communications and Electronics*, Vol. 83 (Nov. 1964), pp. 603-611.

4. Huntley, H. R. "Transmission Design of Intertoll Telephone Trunks," *Bell System Tech. J.*, Vol. 32 (Sept. 1953), pp. 1019-1036.

5. Andrews, F. T., Jr., and R. W. Hatch. "National Telephone Network Transmission Planning in the American Telephone and Telegraph Company," *IEEE Transactions on Communication Technology*, Vol. 19 (June 1971), pp. 302-314.

Chapter 2

Metropolitan Network Plans

All Bell System companies have metropolitan areas comprising complex trunk and switching networks. These networks are complex because of the number of end offices to be interconnected, the volumes of point-to-point traffic loads to be carried, and the possible special routings required for call accounting, number identification, operator assistance, and signalling conversion. Also, many end offices are not equipped for alternate routing, especially those utilizing step-by-step switching machines.

The substantial communication requirements of large metropolitan areas and the variety of interlocal trunking arrangements in use have prompted recommendations for standard metropolitan networks for general use in the Bell System. Requirements for economy and better service under unusual traffic load conditions and the availability of switching systems capable of providing regulated alternate routing (dynamic overload control) were motivating factors in the development of this recommendation. The standard arrangement, called the *multialternate routing* (MAR) arrangement, has the following general characteristics:

(1) Multistage automatic alternate routing

(2) Multitandem switching in the final route

(3) Optional integration of local and toll traffic

(4) The use of a high volume or directional tandem office where needed to augment the basic network.

Studies must be made to anticipate the characteristics of a metropolitan network when the component switching machines are all capable of common control operation. Strategies must be developed for growing into this future network by using time intervals short enough to reflect the variable cross-section requirements, etc. Capital and expense requirements should be developed for each plan for comparison purposes.

In the future, the networks will evolve from the existing step-by-step and locally configured common control networks to the recommended MAR plan. However, the transition process adds additional complexities to the planning and network job. For example, in the case of a network which has a mix of common control and noncommon control central offices, the evolution of the existing network to the recommended network may not be linear. As the common control switching machines are installed and alternate routing capability is added, tandem capacities and trunk group sizes may exhibit highly variable characteristics.

There are a number of metropolitan tandem arrangements in addition to the recommended MAR configuration. An understanding of call routing for each arrangement provides a background in metropolitan network trunk switching patterns. The three local and toll switching office combinations which use the recommended MAR arrangement have different but related transmission designs, each having slightly different performance characteristics. A full treatment of network planning and the reasons for all network changes is beyond the scope of this chapter.

2-1 METROPOLITAN TANDEM NETWORKS

A metropolitan area may be served by one tandem switching system. Where more tandem systems are required, the area may be subdivided into smaller areas called *sectors*. A sector is comprised of the serving areas of a number of end offices. These offices are not necessarily contiguous but offer a blend of traffic such that advantage can be taken of the noncoincidence of busy-hour local and toll traffic loads. Each sector is served by a tandem office, called a *sector tandem,* which is a local area switching center used as an intermediate switching point for traffic between other offices. The interconnecting trunks

used in these networks may be operated as one-way or two-way trunks; i.e., address signalling from the originating station toward the called station may be in either one or both directions. Four types of trunks are used in the local networks: *direct* trunks, which interconnect end offices; *tandem* trunks, which connect end offices to tandem offices; *intertandem* trunks, which interconnect tandem offices; and *toll connecting* trunks.

There are special local conditions where network configurations other than the MAR arrangement have service or economic advantages. In addition, it may be appropriate for the arrangement of a specific network to use two or more configurations. This is inevitable in metropolitan networks which are in the process of planned change from one type of configuration to another. Nevertheless, the MAR should be considered the ultimate objective arrangement in network planning. Several tandem network configurations are capable of automatic alternate routing and thus lend themselves to eventual conversion to the double tandem arrangement. These include the single tandem sector-originating network, the single tandem sector-terminating network, and the central tandem system.

Single Tandem Sector-Originating Network

In the sector-originating network, shown in Figure 2-1, the metropolitan area is sectored either geographically or on a traffic basis. Traffic originating in an end office, EO_A, is routed directly to the called office, EO_B, on a direct high-usage trunk group if there is such a group. Overflow traffic is routed to home sector tandem $T1_A$. Where there is no direct high-usage group, all traffic is routed to $T1_A$. Each sector tandem has final one-way trunk groups to all end offices in the metropolitan area, including the offices in its sector.

The relative efficiencies of the trunk groups to and from the sector tandem result in a smaller number of trunks operating into the tandem office than outward. A self-regulating effect is thus provided under severe overload conditions when excess call attempts are held at the originating end offices; calls that reach the tandem office then have a reasonable chance for completion. This effect and the fact that the sector-originating network adapts more readily and inexpensively to dynamic overload control arrangements make this network preferable to the sector-terminating and central tandem networks.

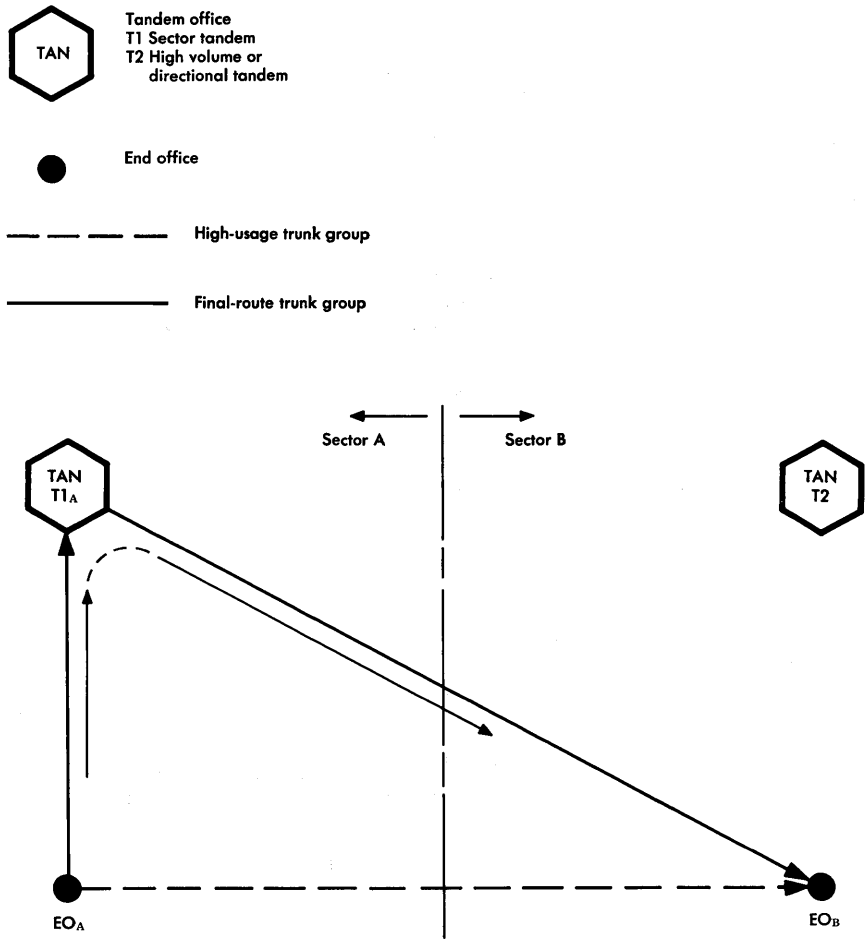

Figure 2-1. Call-routing for single tandem sector-originating network.

Single Tandem Sector-Terminating Network

In the sector-terminating network of Figure 2-2, the tandem office switches traffic inward to the end offices within its sector. Each sector tandem has final one-way trunk groups from each and every end office in the metropolitan area. Traffic originating in EO_A for EO_B is routed via a direct high-usage group if there is one, and the final one-way trunk groups carry the overflow. If there is no high-usage group, all traffic is routed to EO_B through tandem $T1_B$.

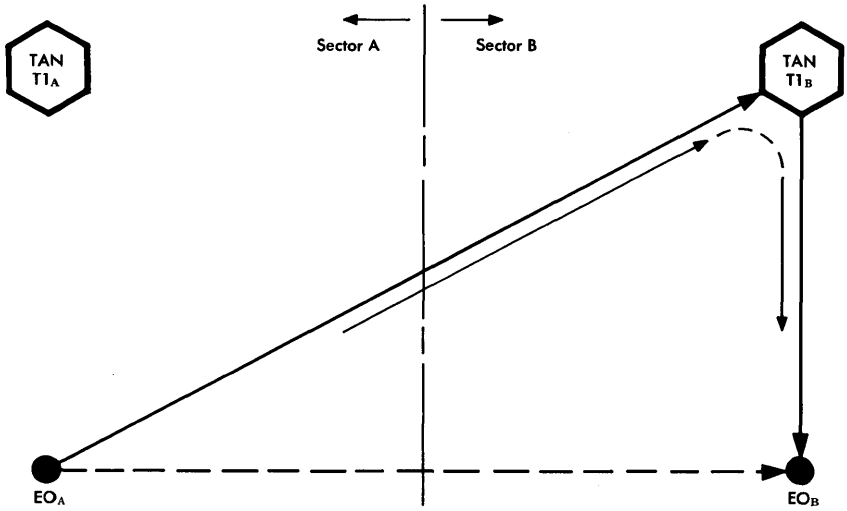

Note: Symbols are same as in Figure 2-1.

Figure 2-2. Call-routing for single tandem sector-terminating network.

Central Tandem System

In the central tandem alternate routing system of Figure 2-3, a single central tandem office has final trunk groups (usually one-way) to and from each end office in the entire metropolitan area. The area is sectored and each sector tandem has final groups to the end offices in its sector. The sectors may be divided into subsectors, each of which is served by a tandem office having final groups to the end offices in the subsector. In most cases, this configuration uses a single central tandem with no sector or subsector tandem offices.

Routing of traffic is determined by traffic volumes offered and the cost ratios involved. As shown in Figure 2-3, the first possible route is a high-usage group direct to the called office. The second and third possible routes are via high-usage groups to the subsector tandem and sector tandem, respectively. The final route is established via the central tandem.

Multialternate Routing Network

In the MAR network, each sector tandem has final routes to and from each end office within its sector. Final intertandem trunk groups

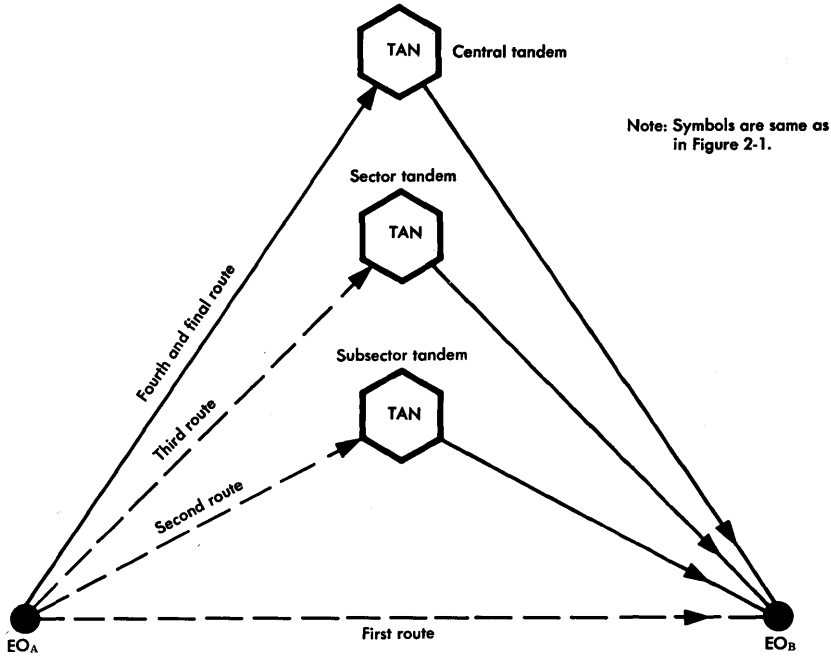

Figure 2-3. Call-routing for central tandem system.

using four-wire voice-frequency or carrier facilities interconnect the tandem offices. High-usage groups may be established to or from a sector tandem to end offices outside its sector, as illustrated in Figure 2-4, by the connections from EO_A to $T1_B$ and from $T1_A$ to EO_B. The four possible routings are shown in the figure.

As previously mentioned, the MAR network configuration is recommended as the basic network for future planning for the larger metropolitan areas. It should be recognized that a gradual transition to this type of network from other network designs is feasible. Some advantages of the MAR over the other networks are lower cost, more even distribution of traffic under distorted overload conditions, simpler application of dynamic overload control features, more adaptability to changes in toll to local calling patterns, more flexible routing, and superior ability to utilize available capacity throughout the network.

Since each end office in a metropolitan area has final toll connecting trunk groups to a toll switching office, it is possible to combine metro-

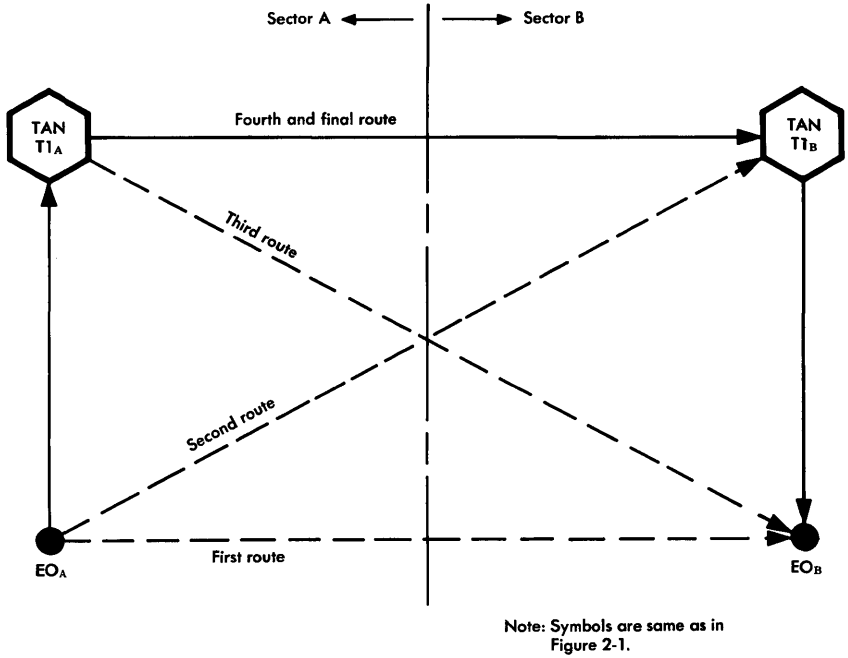

Figure 2-4. Call-routing for MAR network.

politan area traffic with the toll traffic on these groups. This is readily accomplished in the MAR arrangement by having a class 4 toll office also perform the local sector tandem switching function as illustrated in Figure 2-5.

2-2 TRANSMISSION CONSIDERATIONS

The MAR network is a highly flexible configuration that can be used as a local trunk network, a combined local and toll connecting network, or a mixed local and toll switching network. Each of these arrangements of the basic plan is acceptable; however, the transmission requirements, although generally consistent, do vary with each configuration.

General Network Requirements

The following general requirements for satisfactory transmission performance apply to each of the three arrangements:

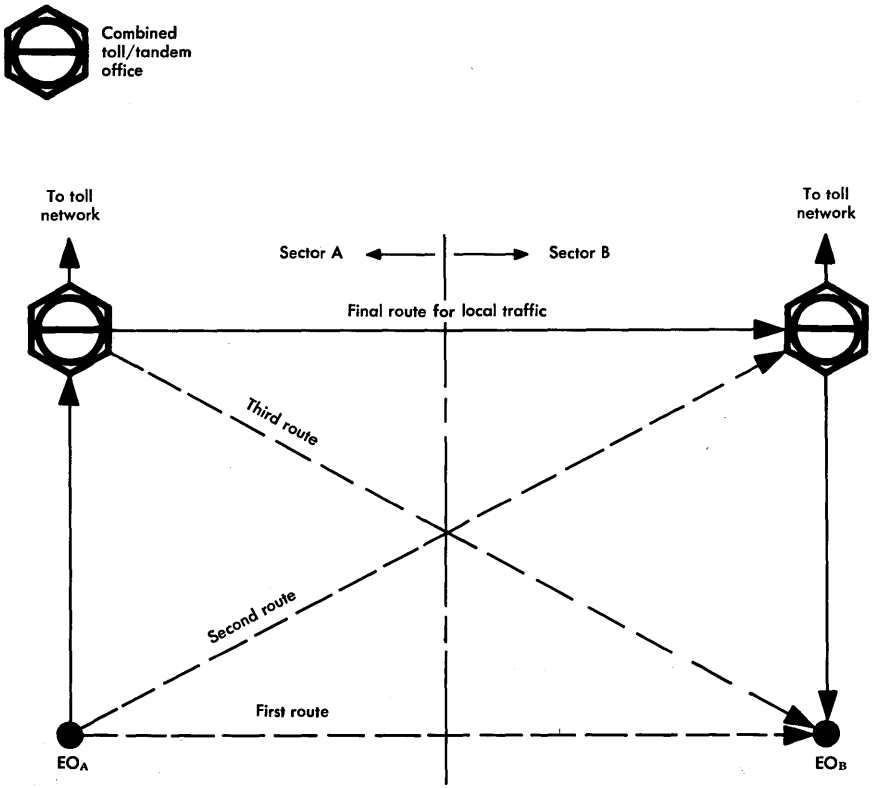

Figure 2-5. Combined toll/tandem arrangement for MAR network.

(1) There may be no more than three trunks in any connection between end offices.

(2) The distance between extreme points in the metropolitan serving area should not exceed about 150 route miles. This guideline is selected to ensure that round-trip delays in excess of 10 milliseconds on 3-link connections are rarely exceeded. Beyond these limits, echo would become a problem. When metropolitan networks must cover larger serving areas, sector tandems and higher ranking tandems must comply with message network toll transmission requirements (i.e., toll connecting and intertoll trunking as well as through and terminal

balance certification). The round-trip delay expected in a given network connection depends on the types of facilities encountered.

Consider a 3-link connection consisting of two tandem trunks and one intertandem trunk. If each sector tandem is permitted to serve a 15-mile radius on H88 loaded cable facilities (0.187 ms per mile round-trip delay), the two tandem trunks contribute the following maximum delay:

$$2 \times 15 \times 0.187 = 5.6 \text{ ms round-trip delay.}$$

If the intertandem facility is N3 carrier, which has a round-trip delay of 2.3 ms per pair of terminals and 0.0185 ms per mile of line, the maximum allowable length of the intertandem trunk for a 3-link connection is:

$$[10 - (5.6 + 2.3)]/0.0185 = 113 \text{ miles.}$$

The overall route length of the 3-link connection for this example is close to the maximum of 150 miles.

(3) Combined toll/tandem installations must meet through and terminal balance objectives applicable to toll offices. Although the combined toll/tandem is actually a through switching center, toll office through balance requirements may not have been specified in older offices since the less stringent terminal balance requirements of Figure 2-6 meet echo and stability objectives for metropolitan networks of limited size. As a result, existing installations which do not meet through balance objectives may be used in these networks.

(4) Intertandem trunks terminating in a two-wire toll switching office that acts as a tandem office should have their network building-out (NBO) capacitors adjusted to the same value as the capacitors used with intertoll trunks in the same office.

(5) Intertandem trunks should use four-wire facilities and trunk circuits and signalling equipment that meet toll requirements.

(6) Precision balancing networks should be used in the four-wire terminating sets of two-wire trunks terminated in four-wire tandem offices. Also, compromise balancing networks should be used in the four-wire terminating sets of four-wire trunks terminated in two-wire tandem offices.

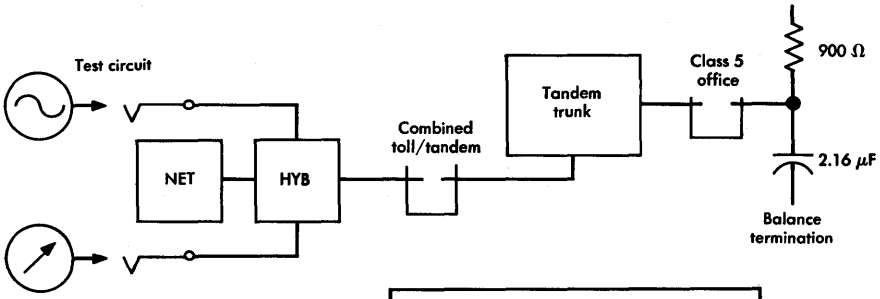

	MEASUREMENTS	
	50% EQUAL TO OR EXCEED, dB	MINIMUM, dB
Echo return loss	22	16
Singing point	15	11

(a) Test of tandem trunk

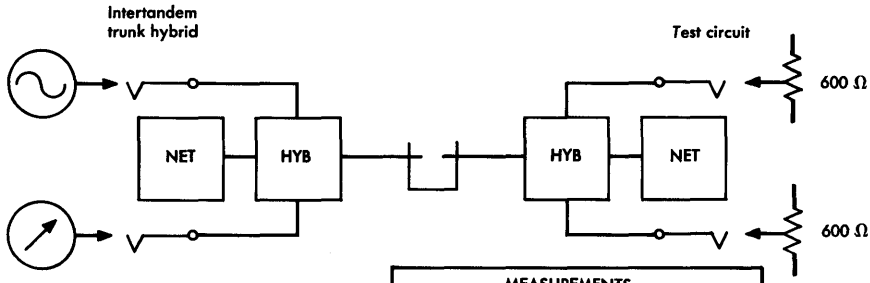

	MEASUREMENTS	
	50% EQUAL TO OR EXCEED, dB	MINIMUM, dB
Echo return loss	22	16
Singing point	No requirement	No requirement

(b) Test of tandem trunk hybrid

Figure 2-6. Balance test requirements for two-wire combined toll/tandem office.

Local Networks

Figure 2-7 shows a network consisting of local trunks only; the inserted connection loss (ICL) objectives are also shown. One advantage of this network is that the local tandem trunks do not require terminal balance treatment at the sector tandem offices. However,

negative impedance repeaters on tandem trunks should be located at the end office or at an intermediate office to obtain the best possible return losses at the sector tandem offices.

Combined Local and Toll Connecting Networks

It was previously pointed out that from a call-routing standpoint there is a possibility of combining local and toll traffic on the toll connecting trunk groups. From a transmission standpoint, the same possibility exists. The ICL objective for toll connecting trunks is VNL + 2.5 dB or, for trunks shorter than 200 miles, 2.0 to 4.0 dB without gain or 3.0 dB with gain or carrier. These objectives fall within the range for local tandem trunks (0.0 to 4.0 dB). Consequently, class 4 toll offices would also be used as the sector tandem offices in the MAR network, as shown in Figure 2-8. The switching

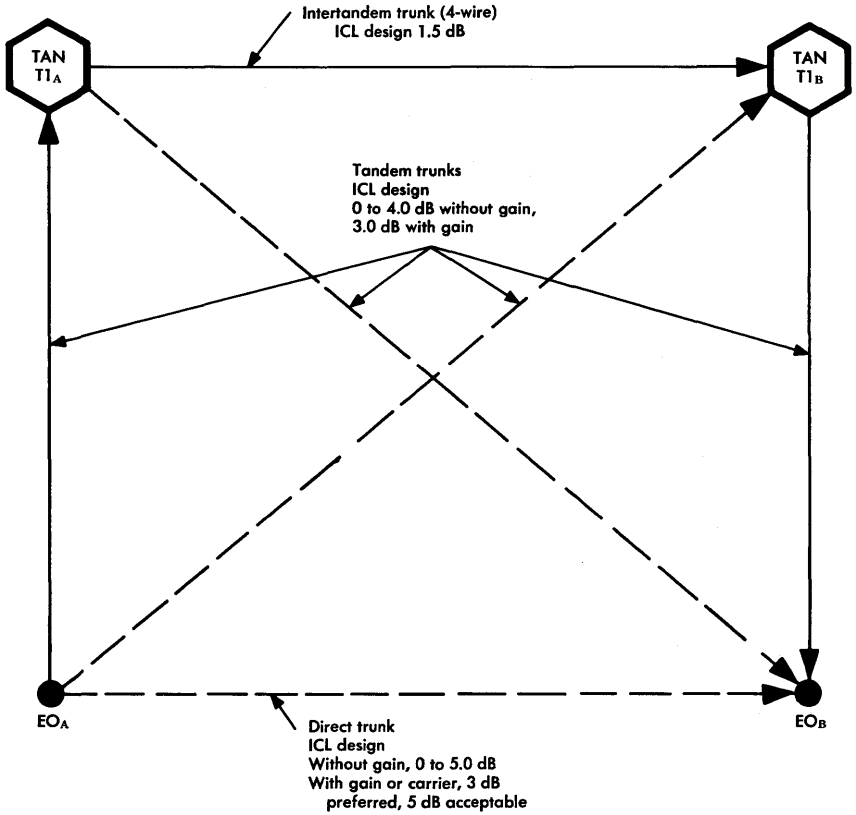

Figure 2-7. Metropolitan local trunk network.

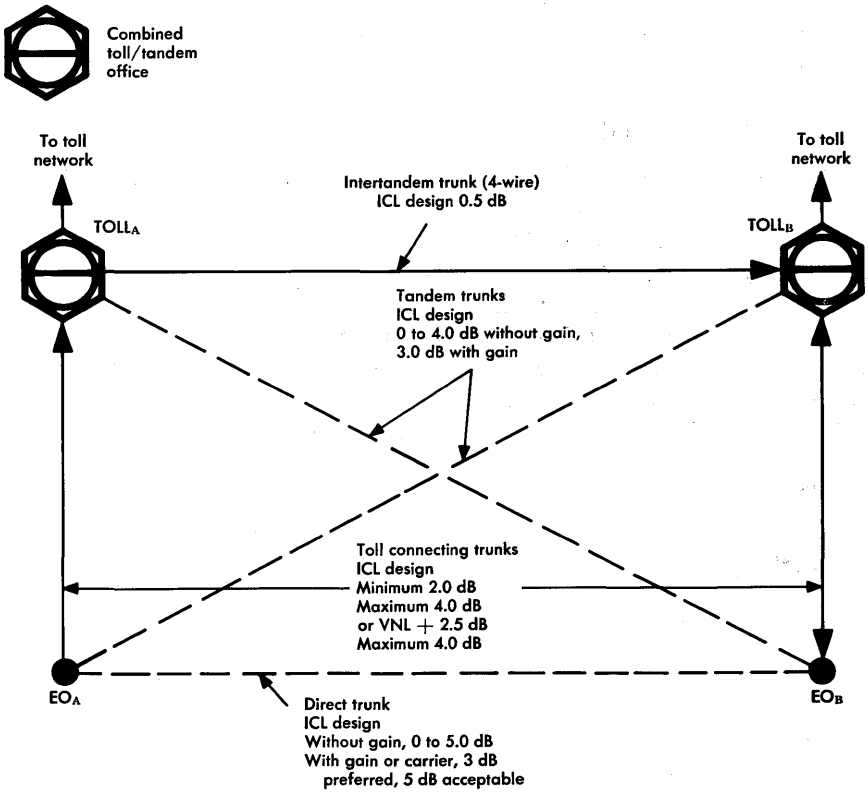

Figure 2-8. Transmission design of combined toll/tandem trunk group network.

machines in these offices must be capable of switching either local or toll traffic. The toll connecting trunks are also used as intrasector tandem trunks. In order to compensate for the slightly higher average loss of the toll connecting trunks, the intertandem trunks are operated at 0.5 dB loss, which is feasible because of adequate terminal balance of the toll connecting trunks.

Mixed Local and Toll Connecting Networks

The network shown in Figure 2-9 is a mixture of a local network and a combined local and toll connecting network. Two types of switching are performed. Sector tandem T1$_A$ switches local traffic while the combined toll/tandem office switches both local and toll traffic. Trunks from the end office to the sector tandem meet tandem

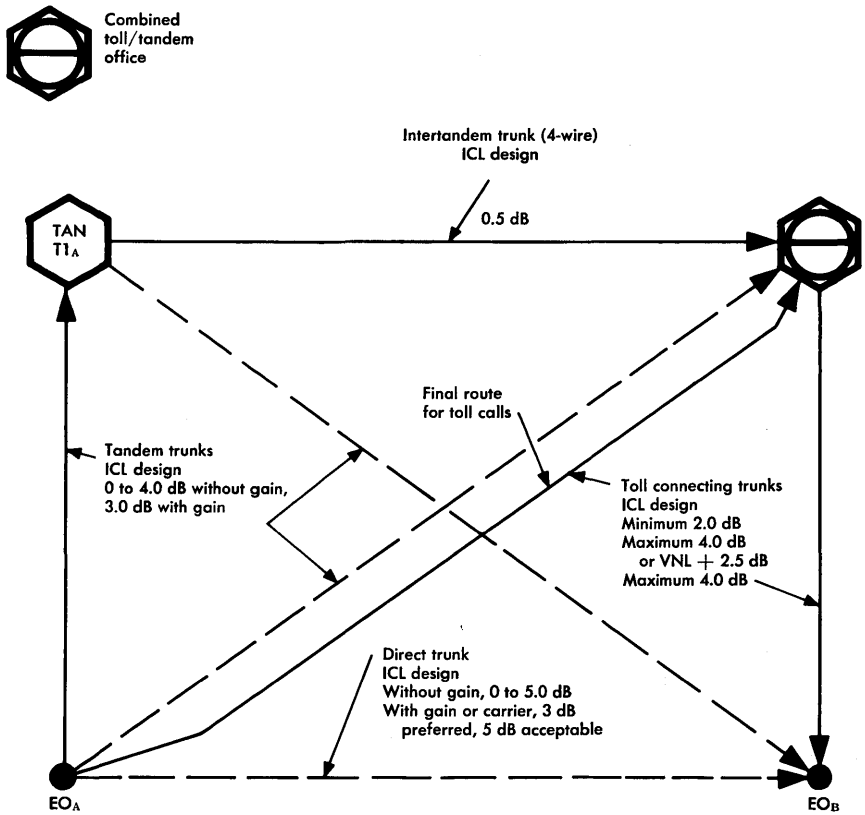

Figure 2-9. Mixed local and toll connecting network.

trunk requirements; trunks from the end office to the toll center must meet toll connecting trunk requirements. Intertandem trunks terminating at the toll center operate with an inserted connection loss of 0.5 dB.

Expected Network Performance

The transmission performance of the local network and the combined local and toll connecting network have been analyzed to evaluate grade of service. The local network was evaluated for two values of inserted connection loss for the intertandem trunks: 0.5 dB, which may be in use in some networks but is not now recommended, and 1.5 dB, which is the recommended value. The parameters used in the

analysis were talker echo, singing point stability, noise/volume grade of service, loss/noise grade of service, and loss contrast.

In Figures 2-11, 2-12, and 2-13, where the results of the analysis are shown, the networks are designated as follows:

LOCAL NETWORK	DESIGNATION
Intertandem ICL = 0.5 dB	A
Intertandem ICL = 1.5 dB	B
Combined local and toll connecting network	C

Loss. In the analysis, loss distributions for the various trunk types were based on Bell System survey data. The distributions are normal and the standard deviations include design and maintenance effects. Figure 2-10 shows the mean, μ, and standard deviation, σ, for each trunk category.

TRUNK CATEGORY	μ, dB	σ, dB
Intertandem trunks:		
Networks A and C	0.5	1.0
Network B	1.5	1.0
Intersector tandem trunks	3.0	1.1
Intrasector tandem trunks	2.5	1.4
Direct trunks	4.0	1.5
Loops	3.5	1.5
Toll connecting trunks	3.4	1.1

Figure 2-10. Loss distributions for various trunk types.

Talker Echo. The trunk loss design is established to ensure satisfactorily low talker echo on at least 99 percent of all connections having the maximum delay. The talker echo performance of the three networks was calculated for the longest estimated delays. These calculations made use of the subjective talker echo tolerances that were used in deriving the VNL plan. The results indicated satisfactory to excellent performance on all connections.

Singing Point Stability. The singing point stability objective is a singing margin of 10 dB or more for at least 95 percent of all connections. The most unstable situation observed in the three networks

analyzed involves an intertandem trunk used in a 3-link connection. The estimated singing margin distributions for 3-link connections and the margin achieved in 95 percent of the cases are given in Figure 2-11.

PARAMETERS	NETWORK		
	A	B	C
Mean	15.0	17.0	23.0
Standard deviation	4.2	4.2	4.2
Margin in 95% of cases	8.1	10.1	16.1

Figure 2-11. Singing margin in dB for intertandem trunks in 3-link connections.

Noise/Volume Grade of Service. A grade-of-service rating based on received noise and speech volume was computed for the three networks by using distributions based on Bell System survey data. The objective grade of service is 95 percent of all calls rated good or better. The results, shown in Figure 2-12, indicate that all networks satisfy the objective. This method of determining the grade of service is no longer used; the results are given to illustrate the results of early performance evaluations. The method of analysis now used is one involving the evaluation of loss/noise grade of service.

NUMBER OF LINKS IN CONNECTION	NETWORK		
	A	B	C
1	95.7	95.7	95.7
2	94.4	94.4	93.7
3	94.4	93.5	92.6
Overall*	95.3	95.2	94.9

*Based on 70% one link, 20% two links, 7% three links.

Figure 2-12. Received noise and speech volume grade of service, percentage of calls rated good or better.

Loss/Noise Grade of Service. An analysis of the three networks was made by using the loss/noise grade-of-service measure of transmission quality. While the absolute percentages for the various numbers of links are somewhat different from the corresponding percentages for received noise/volume grade of service, the results indicate that the loss/noise ratings showed little difference among the three networks.

Contrast. Contrast is defined as the difference in loss between successive calls through a network. Experience indicates that where these differences are less than about 5 dB and other transmission parameters are reasonably good, contrast creates little difficulty. An analysis of the probability of contrast less than 5.0 dB was performed on the three networks on an overall connection distribution basis of 70 percent one link, 20 percent two link, 7 percent three link, and 3 percent four link. To eliminate the effect of loss variations in loops, a fixed value of 2.5 dB was assumed. The results indicate that the probability in percent of contrast less than 5 dB is 95.5, 93.6 and 92.0 for networks A, B, and C, respectively.

Performance Summary. On the basis of the five parameters analyzed, it can be concluded that the networks designated B and C (also shown in Figures 2-7, 2-8, and 2-9) perform satisfactorily from a transmission standpoint. However, network A is somewhat deficient in terms of echo and singing margin performance on 3- and 4-link connections. As a result, it is recommended that intertandem trunks used in local networks segregated from the DDD network be designed with an inserted connection loss of 1.5 dB.

Section 2

Customer Loops

Loops are used for connections between customer locations and local offices. They are the end links for message network service and for many special services. The loop is an important link in every connection because many loop transmission impairments, such as noise or high loss, affect every call and total loop failure isolates the stations connecting to it.

Initially, the loop was simply a pair of wires selected to provide adequate transmission and signalling within the area served by a central office. In urban and suburban areas, cable pairs are now used almost exclusively, while in rural areas, some open-wire lines using steel or copper conductors are still used. Increases in construction costs, customer movement, the cost of copper, and the demands for improved transmission and higher reliability have forced many changes in loop plant technology, design methods, and outside plant administration. Increased signalling range of central offices, higher performance station sets, increased use of inductive loading, and the application of electronics permit the use of finer gauge cable than was heretofore possible.

Long route design, which involves the use of circuits that provide signalling range extension and voice-frequency gain, also permits the use of finer gauge cable for loops serving rural areas. Single channel and multichannel analog subscriber carrier systems are used increasingly for deriving additional loop facilities on a single cable pair, both as a temporary solution when additional physical pairs are not available and as an economic alternative for providing permanent service. Concentrator switching systems are also being used to provide for the more economical use of the loop plant. The subscriber loop multiplexer system and the digital subscriber loop carrier system provide additional economic alternatives for upgrading and growth,

especially in rural areas, often with improved transmission performance relative to long voice-frequency cable facilities.

Chapter 3 characterizes the loop plant and reviews the associated engineering problems. Statistical data derived from Bell System loop surveys are summarized and the more important physical characteristics and distributions of transmission parameters that can be expected in the loop universe are highlighted. The chapter concludes with a discussion of the Outside Plant Plan that has evolved to permit more efficient engineering of the outside plant and to permit continued control of the transmission characteristics of loops.

Maximum loop lengths are limited in many cases by transmission considerations but there are many other considerations that may also limit loop lengths. These include the transmission of dc power, control and supervisory signalling, ringing, and ring tripping, all of which are discussed in Chapter 4.

Transmission considerations involved in the provision of loops using the present methods of resistance design, unigauge design, and long route applications are covered in Chapter 5. The distributions of transmission parameters attainable by these methods are analyzed from the standpoint of their effects on overall voice and data message network service. Brief reference is also made to supplementary considerations for various special services, where appropriate. However, detailed design criteria for the loop portions of such services are discussed in subsequent chapters relating to special services.

Chapter 3

Loop Plant Characteristics

Since loops are integral portions of every connection, whether through the message network or as part of a dedicated channel or network, a knowledge of loop plant characteristics is required to establish interrelated criteria for other network or channel components. Periodic surveys are taken in the Bell System to determine the nature of the loop plant and to evaluate important trends in the various physical and electrical characteristics that might influence future design and administrative planning.

Characterization resulting from a loop survey is broad in nature and is not necessarily valid for small segments of the total loop plant. The topography of one wire center serving area may differ sharply from another and from the average. Without treatment, some wire center distributions would not provide the desired overall loop transmission characteristics, especially in rural areas. However, each design method presently in use provides the flexibility to accommodate topographical differences and to achieve a distribution of transmission parameters that meets loss and noise requirements.

The evolution of design and construction practices may also have influenced the actual distributions found, since many wire center serving areas may contain some plant placed according to earlier design methods. For example, prior to 1950, loop design was based on an "effective loss limit" for each local office. The limit was determined for each local office by loop and trunk studies in which compromises were made between loop and trunk losses. This method was replaced by the resistance design plan, which provides a uniform set of design criteria for all offices. However, existing routes, originally designed according to the effective loss method, may still contain a significant

percentage of loops at or near the limiting loss value; these loops may tend to skew the overall loss distribution in the high direction. These situations are gradually corrected by applying more modern design methods as such routes are extended or enlarged, or as the older cables are replaced. However, in areas which have experienced little or no growth, some of the earlier plant may still remain.

3-1 OUTSIDE PLANT ENGINEERING

The provision of outside plant facilities requires the application of engineering skills to the solution of problems involving the economical and efficent layout and utilization of cables. At the same time, these facilities must be capable of rendering customer satisfaction in terms of signalling, supervision, and high transmission quality for a wide variety of telecommunication services.

As demands for service have increased and expenditures have risen to satisfy these demands, new concepts and administrative procedures have been introduced for engineering and construction of plant. Multiple plant design, dedicated or permanently connected plant, and the serving area concept have been coupled with increased use of electronics and improved equipment designs. These approaches are combined to help solve the loop plant engineering problems.

Changing Patterns of Telephone Usage

Population growth, the changing pattern of population distribution, and the general increase in affluence have brought an unprecedented demand for telecommunication services and a concomitant need for facilities. The growth in service is notable, but even more notable is the fact that for a net gain of one telephone station, about ten stations must be installed; i.e., for each station gained, eight or nine others must be installed to accommodate residential or business moves. The necessity for providing loop facilities in such a situation presents many difficult engineering problems.

In addition to population growth and mobility, there has been an increase in the percentage of households that desire service (now in excess of 90 percent) and in the percentage desiring individual instead of party line service. These factors also increase the needs for additional loop facilities.

Evolution of Designs

The outside plant provides a signalling and voice transmission path between a central office and the station set. This is usually accomplished over pairs of metallic conductors bundled in a cable. Distribution cables provide facilities in local residential and business areas. Cable sizes are chosen to provide for the maximum service expected to evolve within the area under existing land usage and zoning plans. Distribution cable pairs are connected to the central office through larger branch feeder and main feeder cables.

While the geographical arrangement of streets, the ease of providing for growth, and protection from construction activity all influence the layout of feeder routes, the shortest distance from the central office to a customer location is generally the basis for most feeder route layouts. However, in certain circumstances the most economical route is other than the shortest; it may be determined by studies that involve the determination of equal cost boundaries within a fairly large area. The resulting arrangements in either case generally meet transmission requirements with the most economical use of cable conductors.

Multiple Plant Design. The multiple plant design concept, which evolved before the increased demand for individual service, provided for splicing two or more distribution cable pairs to the same feeder cable pair. This procedure had the advantage of allowing a minimum number of feeder pairs to furnish a large amount of party line service, as illustrated in Figure 3-1. Addition of multiple plant feeder cables necessitated cable pair transfers to provide relief to distribution cables. Line and station transfers at the multipling location were necessary to achieve high fills in the feeder plant. Although multiple plant design is generally not the first choice for new plant, it still has applications in areas where growth patterns are uncertain. Furthermore, a large proportion of existing plant was installed when multiple plant design was standard.

Dedicated Outside Plant Design. When it became apparent that multiple plant design was uneconomical for increased service needs, the dedicated outside plant plan was introduced. It provides for the permanent assignment of a cable pair from the central office main frame to each residential or business location not requiring PBX or key telephone service. Once dedicated, the cable pair remains assigned to the original location whether service is being rendered or not. Permanent assignment makes possible the elimination of multiple branches in

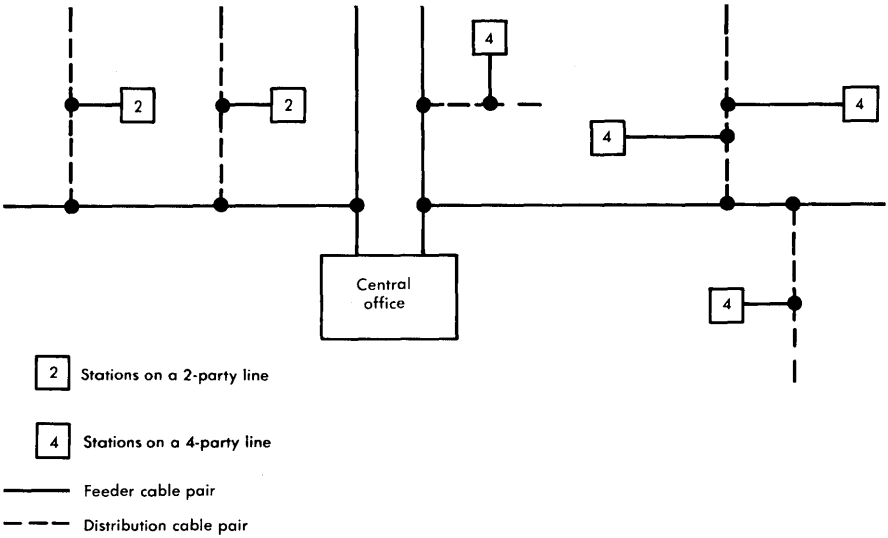

Figure 3-1. Multiple plant design.

the feeder and distribution network, thereby practically eliminating line, station, and cable pair transfers. Under this plan, all party line stations are bridged at the central office main frame; bridge lifters are used to control transmission discontinuities arising from excessive lengths of bridged tap.

Connection devices, located at control and access points, are installed to provide flexibility in the assignment of spare pairs. Figure 3-2 shows a comparison of one cable pair connection in a multiple plant design to that in a dedicated plant design. The dotted lines indicate the pairs which are idle and reassignable in the dedicated plant design plan but which are permanently connected bridged taps in the multiple plant design.

Under the dedicated outside plant plan, reductions in cable pair rearrangements result in cost savings and a decrease in man-made troubles. Many bridged taps are also eliminated, as can be seen in Figure 3-2. While the dedicated outside plant concept remains valid, anticipated cost savings have often not been realized because of complicated record administration and the wiring complexities at the control and access points. As a result, it has largely been superseded by the serving area concept.

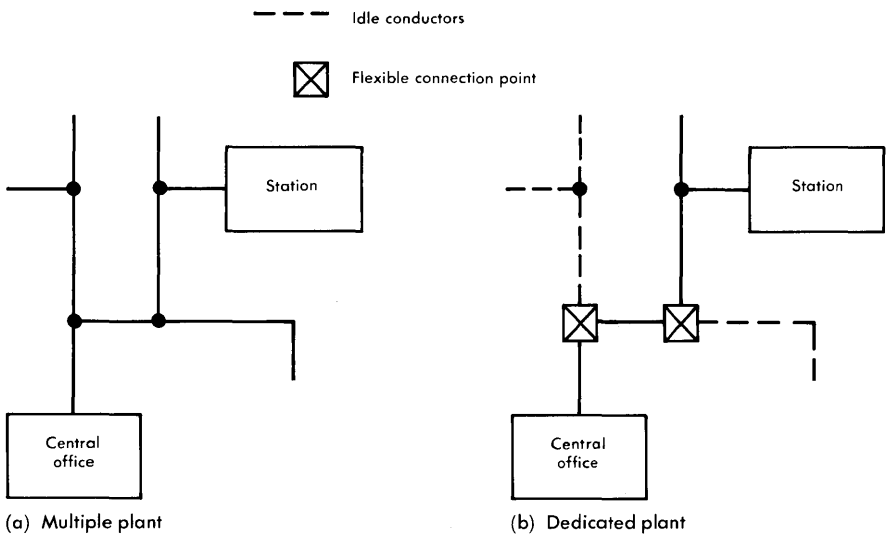

Figure 3-2. Comparison of multiple and dedicated plant.

Serving Area Concept. Portions of the geographical area of a wire center may be divided into discrete serving areas to be administered under the serving area concept. The outside plant within the confines of the serving area is known as the distribution network. It is connected to the feeder network at a single interconnection point called the serving area interface. Figure 3-3, a typical configuration for the serving area concept, illustrates the use of the single interface. All pairs at the input and output of the interface are terminated on connecting blocks which provide the single point of interconnection between the feeder and distribution pairs.

The concept provides for the expansion of permanent and reassignable services, yet minimizes future rearrangements; it simplifies and reduces engineering and plant records necessary to design, construct, administer, and maintain outside plant; it improves and reduces maintenance activities in terminals and enclosures; and it improves transmission by minimizing bridged taps.

The interface also allows investment economies to be realized by separating the distribution and feeder facilities. For example, distribution facilities may be provided to serve the ultimate needs of

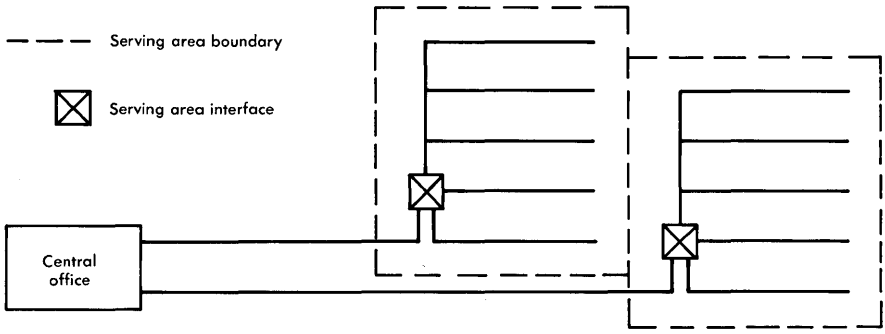

Figure 3-3. A simplified configuration of the serving area concept.

the area, whereas the installation of feeder facilities can be deferred until needed.

When administered under the serving area concept, distribution cables are selected to provide a minimum of two cable pairs to each anticipated residential unit; these pairs are permanently wired to the serving area interface. The optimum size of each serving area, in the range of 200 to 600 residential units, is determined by geographical constraints and predicted population density. In areas where growth is uncertain, reassignable plant can be built and converted to the serving area concept as growth characteristics become apparent.

Operating expense for the serving area concept is less than for the dedicated outside plant plan because of better designed equipment and simplicity of record maintenance. The provision of at least two distribution pairs per residential unit increases the cost of the cable network but this cost is offset by higher average feeder cable utilization and reduced station connection and repair costs. The serving area concept also provides benefits by reducing the need for making station connections in areas where PhoneCenter Stores, at which telephone sets may be selected by customers for plug-in installation, have been established; i.e., there is a higher probability that a loop pair can be provided without delay.

Administration of the Local Cable Network. Since the introduction of the serving area concept, procedures have evolved to provide for the administration of local cable networks and to specify the application of various designs discussed. Each design has one or more administrative methods associated with it.

When multiple plant design is used, feeder and distribution cable pairs may be flexibly reassigned as changes are required. In addition, pairs may be reassigned 60 days after release from a previously assigned address. These two features are called *reassignable* and *connect-through* methods of administration, respectively.

The *permanently connected plant* method of administration is used predominantly with dedicated outside plant design. In this method, a cable pair is permanently connected from the central office to each residential unit.

The single interface design may be administered by reassignable, connect-through, or permanently connected plant methods. As previously mentioned, the single interface is an integral part of the serving area concept and provides a portion of the savings achieved because of its inherent flexibility. Due to this flexibility, single interface design and the serving area concept are attractive for new cable extensions and the conversion of existing multiple plant design.

Outside Plant Engineering Functions

With changes in customer usage, many new combinations of design and administration have been introduced. Other factors have also produced changes in outside plant engineering. Technological changes in the building industry have shortened the time available to provide facilities for service to new buildings. The use of electronic computers has increased the amount and accessibility of data necessary to optimize expenditures. Rapid growth combined with multiple plant design has resulted in very complex feeder route configurations.

The administration of the outside plant requires that an *Outside Plant Plan* be prepared and kept up-to-date and that the construction budget be prepared regularly. The Outside Plant Plan is completely restructured only when the validity of the existing plan is seriously in doubt. Many computer programs are available to provide aid in the analysis and development of an Outside Plant Plan and an optimum budget. Available are the Air Pressurization Analysis Program (AIRPAP), the Economic Alternative Selection for Outside Plant (EASOP) program, a number of versions of the Exchange Feeder Route Analysis Program (EFRAP) with supplementary programs such as the Time-Share Cable Sizing (TICS) program, the Loop Carrier Analysis Program (LCAP), the Long Feeder Route Analysis

Program (LFRAP), the Long Route Economic Study (LORES) program, and many more.

Additions to outside plant facilities must conform with the Outside Plant Plan and should agree with company objectives and long range plans for the provision of permanently connected plant, out-of-sight plant, etc. Coordination is necessary to ensure scheduling compatibility with major undertakings, such as central office cutovers and area transfers.

3-2 PHYSICAL CHARACTERISTICS OF LOOPS

Comprehensive surveys of loop facilities were conducted in 1960, 1964, and 1973 [1, 2, 3]. The results of such surveys are used to characterize the loop plant in studies of costs and performance. In the 1964 and 1973 surveys, random samples of 1100 main station loops were selected for analysis from the universe of all existing loops. In the 1964 survey, an additional random sample of 955 loops was selected from all loops more than 30 kilofeet long to provide what is known as the long loop survey. Official telephone lines, dial teletypewriter exchange lines, and special service lines were excluded from these samples. Survey results are valuable in characterizing the plant at the time they are made and also show, by comparison of results, the trend of changes in various characteristics.

A typical loop survey includes detailed information on loop lengths, bridged tap lengths, wire gauges, type of construction, and type of service provided. Cumulative distributions of loop length, total bridged tap lengths, and wire gauges from recent loop surveys are given in Figures 3-4, 3-5, and 3-6. Distributions of types of construction and type of service from the survey of 1973 are given in Figures 3-7 and 3-8, respectively. The sampled loops of Figures 3-6, 3-7, and 3-8 were inspected at intervals of 1000 feet, starting at the central office, to evaluate the composition of loop plant as a function of distance. For example, Figure 3-6 shows that in 1964 40-kilofoot loops were generally made up of complex combinations of wire types and gauges; they contained, on the average, 22 percent 22-gauge wire pairs, 58 percent 19-gauge wire pairs, 17 percent steel open-wire pairs, and 3 percent open-wire pairs of copper and copper-steel composition.

The mean loop length was found to be 10.3 kilofeet in the 1960 survey, 10.6 kilofeet in 1964, and 11.4 kilofeet in 1973. Even though

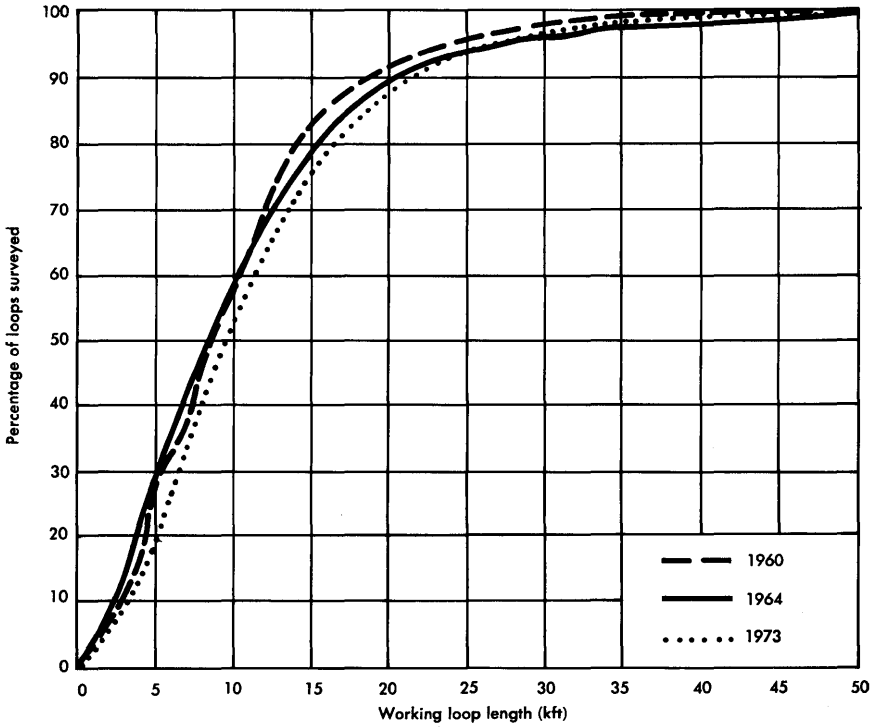

Figure 3-4. Distribution of loop lengths.

only about 4 percent of all loops exceeded 30 kilofeet in 1964, there was demonstrated a trend toward longer loops that is quite significant in terms of economic impact. Costs for long loops are proportionately much higher than costs for short loops where equivalent transmission, signalling, and supervisory performance is provided. The development of various long route design applications now available was to a large extent stimulated by economic considerations.

Survey results indicate that the use of inductive loading is increasing. Care must be taken in applying loading to avoid the introduction of loading errors which may reduce the benefits of lower losses and are also violations of loop design rules. The use of inductive loading and the application of a number of auxiliary systems and equipment are summarized in Figure 3-9.

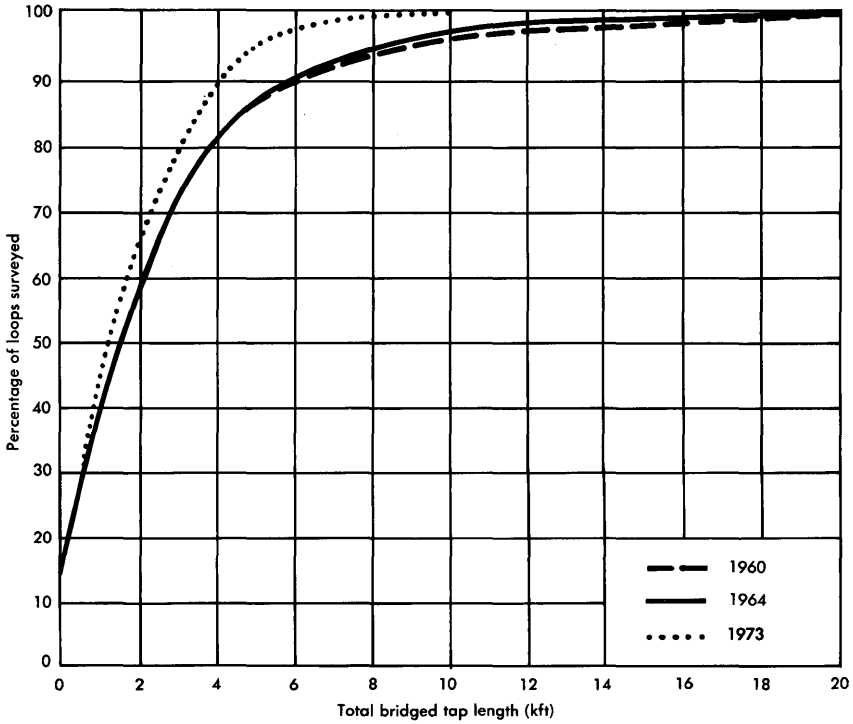

Figure 3-5. Distribution of bridged tap lengths in loop plant.

3-3 LOOP TRANSMISSION CHARACTERISTICS

In the 1964 loop survey, transmission performance data were developed by deriving equivalent T networks from information supplied on loop records. These networks were then analyzed for transmission performance. In addition, insertion loss measurements were made at 1, 2, and 3 kHz; dc resistance, noise, and crosstalk were also measured. The analysis process was repeated in 1973 but measurements were not made because measured and computed values agreed so well in the earlier survey.

Insertion Loss

The cumulative distributions of insertion losses at 1, 2, and 3 kHz derived from calculated data in the general loop surveys of 1964 and

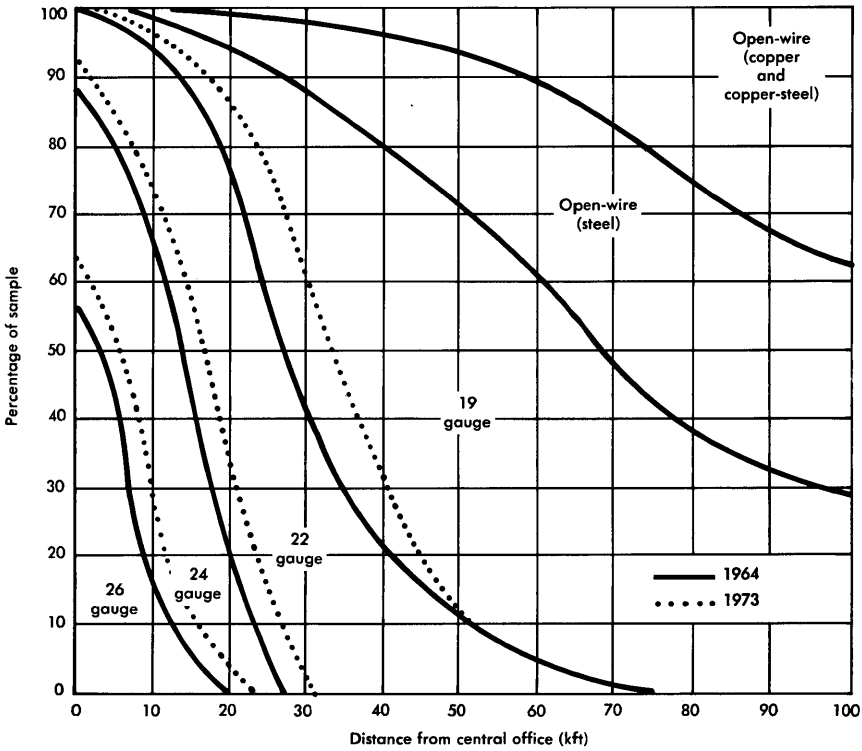

Figure 3-6. Distribution of wire types and gauges in loop plant.

1973 are shown in Figure 3-10. In all cases, the terminating impedances were 900 ohms. The mean value of the measured 1-kHz loop insertion losses was 3.5 dB in 1964 and 3.7 dB in 1973. About 95 percent of all loops had a 1-kHz insertion loss less than 8 dB in 1964 and 98 percent in 1973. The 1973 distribution, modified to account for variations in station set transmitting and receiving efficiencies with loop current, is widely used in transmission studies to represent the insertion losses of loops.

Comparison of the insertion losses in Figure 3-10 shows that the calculated values tend to be very nearly the same for both surveys with some increase in 1-kHz loss in 1973 relative to 1964. In general, the outside plant cable records for nonloaded loops were found to be

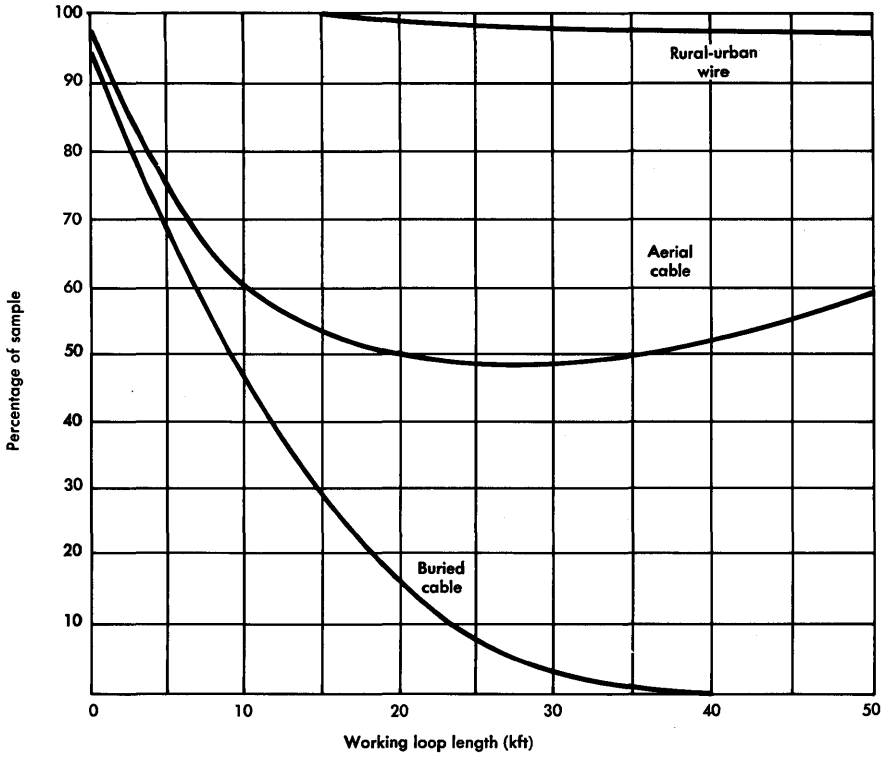

Figure 3-7. Distribution of loop construction types.

sufficiently accurate to permit loop characterization by calculation but the same was not always true for recorded makeups on loaded loop facilities.

Loop Resistance

The comparison of measured and calculated loop resistances in the 1964 survey showed no significant difference between the two sets of data. Note that about 98 percent of all loops had a resistance of 1300 ohms or less. Figure 3-11 shows the distribution of loop resistances for the 1964 and the 1973 surveys. Note that loop resistances have generally increased with time. In 1964, the mean value of loop resistance was 574 ohms and in 1973, 646 ohms.

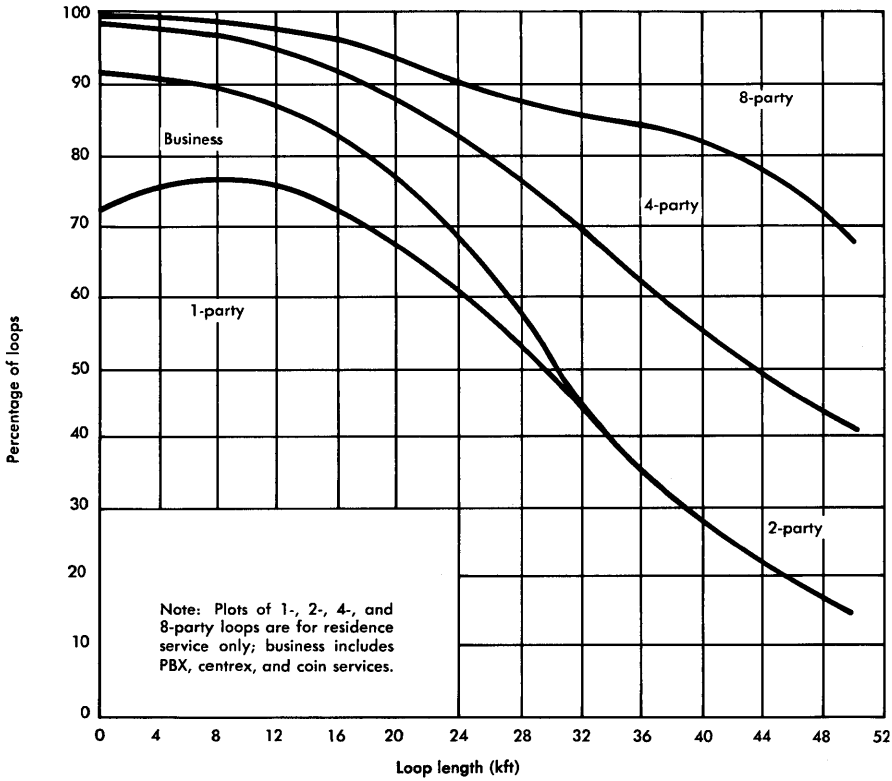

Figure 3-8. Distribution of type of service versus loop length.

Return Loss

Approximate echo return loss data were obtained by calculating the return losses at five frequencies (500, 1000, 1500, 2000, and 2500 Hz) and determining the mean value. The calculated return loss is a measure of the departure of the impedance of the loop at the central office from a reference impedance consisting of 900 ohms in series with 2.16 μF. The calculation assumes the far end of the loop is terminated with the impedance of an off-hook 500-type station set. Figure 3-12 shows the cumulative distributions of echo return losses obtained in the 1960 and 1964 loop surveys. The 1973 survey results indicate that return loss performance is essentially unchanged since 1964. While there is no stated echo return loss objective for loop plant, adherence to design rules should ensure an overall loop distri-

LOOP TYPES	PERCENTAGE OF LOOPS			
	1960 GENERAL SURVEY	1964 GENERAL SURVEY	1964 LONG LOOP SURVEY	1973 GENERAL SURVEY
Loaded loops — total	9.4	16.4	94.0	22.9
With H88 loading	7.9	15.5	84.7	22.6
Having load spacing deviations exceeding 500 feet*	6.2	5.3	—	8.6
Having equivalent end section exceeding 15 kilofeet*	1.2	2.3	17.8	1.3
Having loaded bridged tap*	0.3	0.8	6.3	1.0
Nonloaded loops				
Exceeding 18 kilofeet*	2.7	1.5	—	1.0
Having bridged tap exceeding 6 kilofeet*	6.5	6.0	—	1.6
Line concentrators	0.2	0.4	4.8	<0.1
Dial long-line circuits	NA	0.7	27.9	<0.1
Voice repeaters	NA	0.4	1.9	0.09
Carrier systems	0.2	<0.1	0.9	<0.1

*Violation of design rules.

Figure 3-9. Miscellaneous loop characteristics.

bution at least as good as that in Figure 3-12. Such performance is important from the standpoint of ensuring adequate overall echo balance in built-up connections.

Noise

Central office noise, circuit imbalance, and power line influence may be serious contributors to loop noise. However, it is usually difficult to separate completely the effects of these factors in noise measurements. For example, the disturbing effects of central office noise (which might otherwise be within limits) may be significantly enhanced as a result of longitudinal-to-metallic voltage transformation due to imbalances in the central office equipment, station equipment, or conductors of a given loop or route. Excessive message circuit noise on loops is sometimes due, either directly or indirectly, to such imbalances.

Figure 3-13 shows the most likely contributors to excessive loop noise for individual lines, party lines, and coin stations. Power line

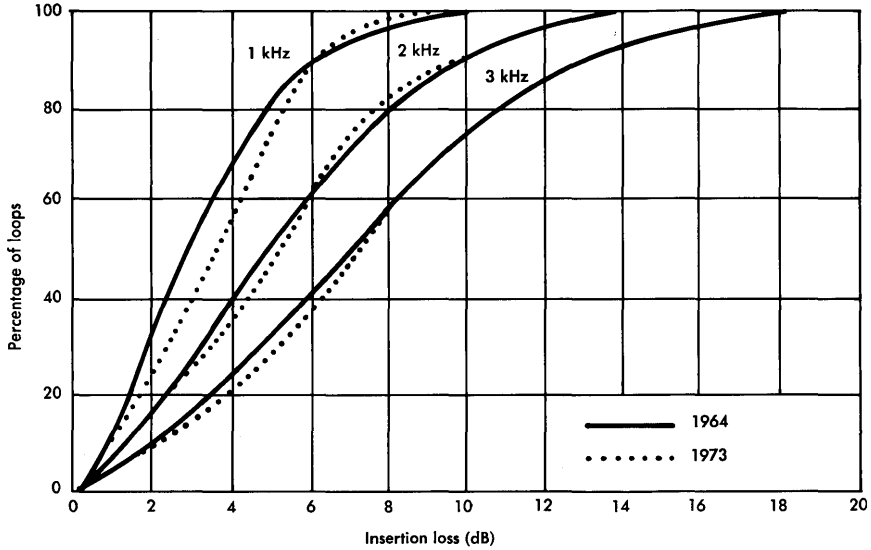

Figure 3-10. Distribution of calculated loop insertion losses.

influence (hum), a predominant contributor for longer loops because longitudinal voltages tend to be proportional to exposure length, is determined by the degree of longitudinal-to-metallic conversion. This conversion depends directly on the imbalance to ground of the loop conductors and the terminating equipment at the central office and the station.

Figure 3-13 also shows that sources of central office noise (switch contacts, power supplies, crosstalk) are generally significant contributors to the total message circuit noise only on shorter loops. On longer loops, noise from these sources is attenuated at the station by the higher long-loop insertion loss and is usually masked by power line hum. However, the switch contact and power supply transient components of central office noise are still primary sources of impulse noise, often a limiting noise parameter for data-type services.

Noise Balance. The longitudinal to metallic noise conversion susceptibility of a loop may be evaluated by computing the noise balance, defined as

$$\text{Noise balance in dB} = 20 \log \frac{\text{open circuit longitudinal voltage}}{\text{metallic voltage}}.$$

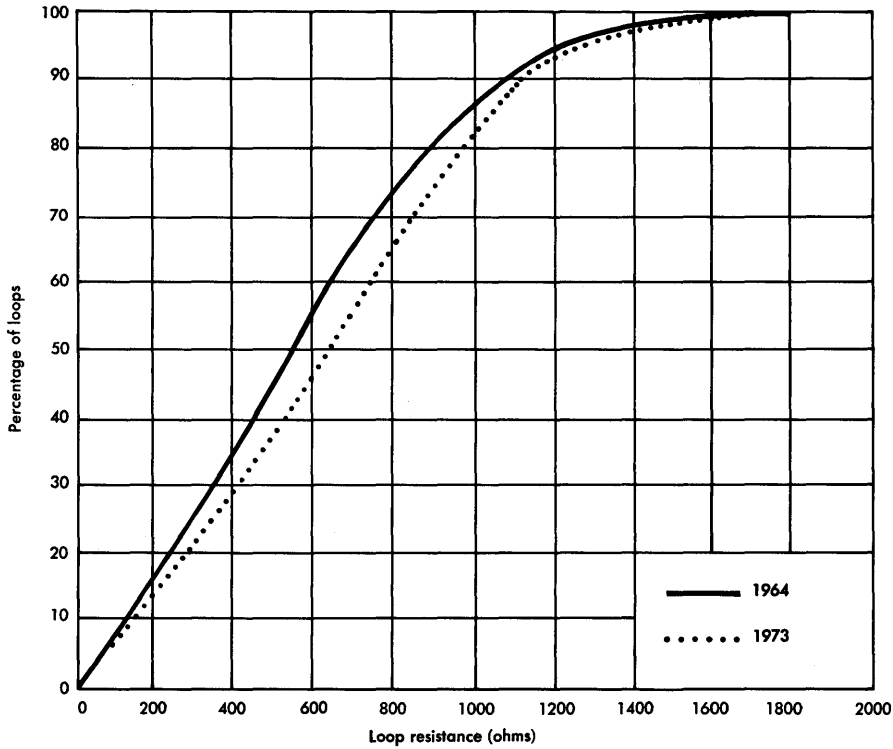

Figure 3-11. Distribution of calculated loop resistances.

An estimate of loop noise balance is often made by using a 3-type noise measuring set or equivalent (C-message weighting) to measure noise power to ground (longitudinal noise) and noise power between conductors (metallic noise). If the difference between the two is less than 50 dB, the overall message circuit noise can generally be reduced by improving the balance of the loop or its associated equipment.

Figure 3-14 shows the distribution of noise balance measurements for loops in the 1964 combined survey which had longitudinal noise power greater than 20 dBrnc. As can be seen, the mean noise balance for party lines was almost 13 dB poorer than that of individual lines. Almost 20 percent of the party lines had noise balances below 50 dB, as opposed to only 5 percent of the individual lines. Thus, it can be expected that party lines in general, and the longer ones in particular,

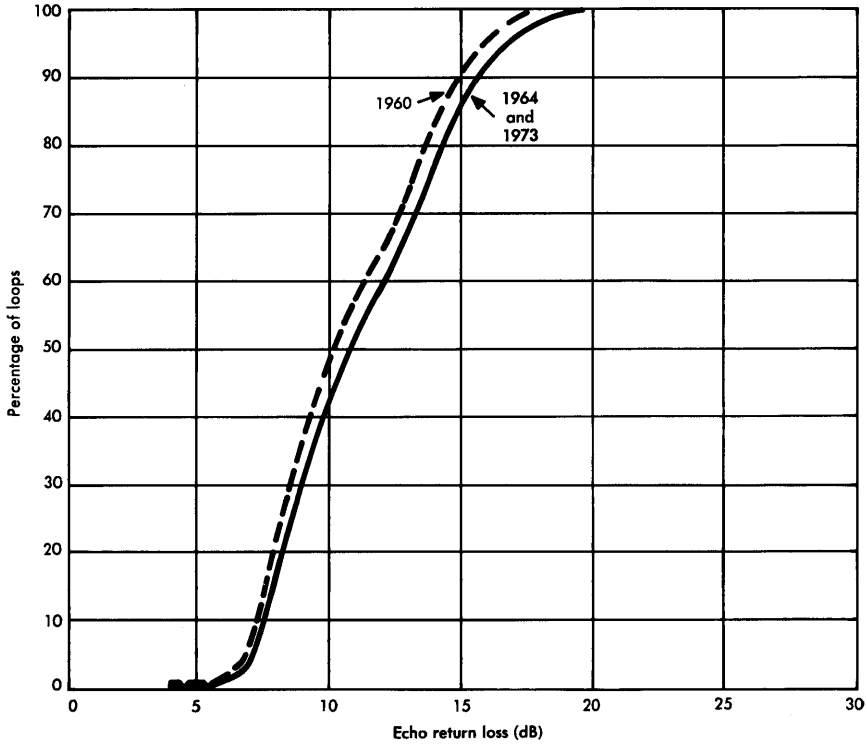

Figure 3-12. Distribution of calculated loop echo return losses.

NOISE SOURCE	LONG LOOPS		SHORT LOOPS	
	INDIVIDUAL LINES	PARTY LINES AND COIN STATIONS	INDIVIDUAL LINES	PARTY LINES AND COIN STATIONS
Power line influence	Yes	Yes	Usually small	Usually small
Central office imbalance	Yes	Yes	Yes	Yes
Station imbalance	Usually small	Yes	Usually small	Yes
Central office noise	Attenuated	Attenuated	Yes	Yes

Figure 3-13. Loop noise factors.

are more adversely affected by induced longitudinal voltages and that excessive noise on such lines can often be reduced by improvement of balance. These expectations are substantiated by the results, shown in Figure 3-15, of metallic noise measurements made at the station set with dialed central office terminations. Results from both the general and long loop surveys are given for comparison. Figure 3-15(a) shows the results for all lines and Figure 3-15(b) subdivides the results into the individual and party line components. Loop balance and loop noise performance has improved and will continue to improve as the number of party lines in service is reduced and as modern techniques for improving balance are increasingly applied to the remaining party lines.

In the 1964 survey, the mean value of the metallic noise for all loops, shown in Figure 3-15(a), was found to be about 5.6 dBrnc; for long loops it was 18.4 dBrnc. About 57 percent of the long party line loops exceeded 20 dBrnc, the nominal message circuit noise objective for all loops, and 27 percent exceeded 30 dBrnc, the maximum objective for long loops.

Since these measurements were made with dialed central office terminations, the noise contributions of central office sources were

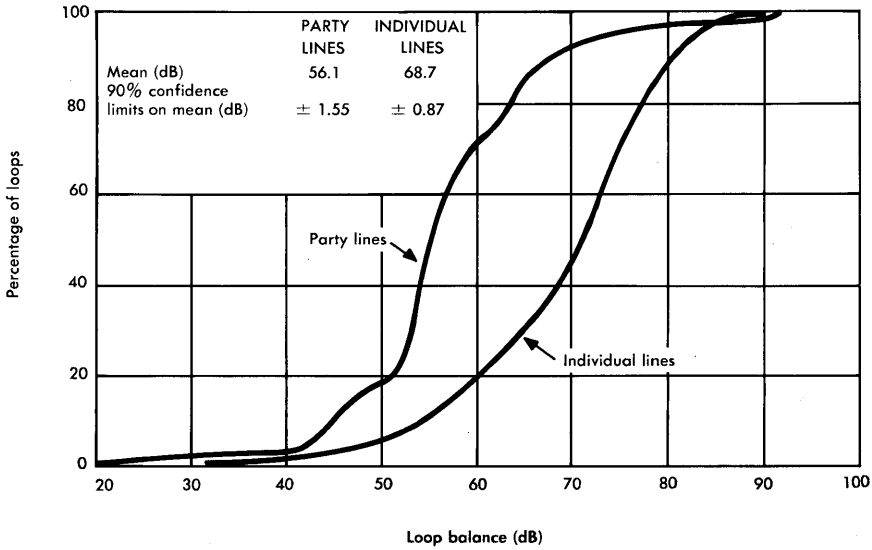

Figure 3-14. Loop circuit noise balance, 1964 survey.

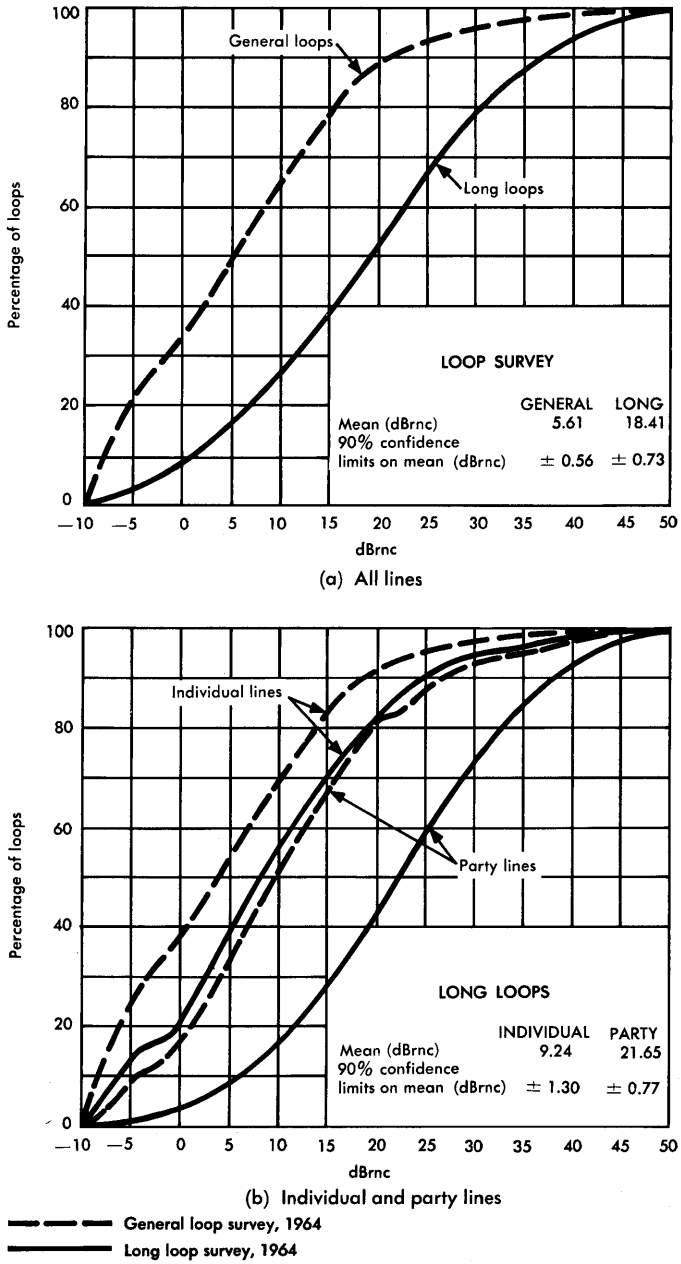

Figure 3-15. Metallic noise at station set with dialed central office termination.

included in the readings. Therefore, noise measurements were also made by terminating the loops directly at the main distributing frame to eliminate most of the central office noise sources. The results are shown in Figure 3-16. If these results are compared with those of Figure 3-15, it can be seen that the contribution of the central office noise to the total loop noise varies from insignificant, in the case of long-loop party lines, to controlling, in the case of general individual line service. However, also note in Figure 3-15 that, even with the addition of the central office noise sources, about 92 percent of all individual lines still meet the 20 dBrnc message circuit noise objective at the station.

Crosstalk. Another potential contributor to noise on loops is crosstalk from other pairs within the same cable sheath. Figure 3-17 shows the near-end 1-kHz crosstalk coupling loss characteristics of loops as derived from measured 1964 survey data. Comparison of the curves for nonloaded loops and the total of all loops shows the relatively poorer crosstalk performance of longer loaded loops. However, the distribution of coupling losses is still such that the resultant crosstalk is not usually a controlling message circuit noise component. The crosstalk coupling loss distribution may be significantly degraded by excessive imbalances in the pairs or terminating equipment or by significant loading deviations. Where this occurs, the resultant increased crosstalk may be masked by an even greater increase in power line hum.

Administration of Loop Noise Objectives. Loop noise measurements are most accurate when they are made at a station by means of a noise measuring set connected to the line terminals of the station after the loop has been connected to a termination in the central office. During the measurement, the station set is not disconnected but must be on-hook; thus, the measuring apparatus must include a circuit to hold the connection during the measurement. The desired result for noise measured in this manner on a large number of loops is a distribution with the substantial majority of loops having noise less than 20 dBrnc. For short loops, measured noise must not exceed 20 dBrnc on any loop. Since, for loops provided under the long route design plan, it is not economically possible to achieve noise performance of better than 20 dBrnc on all loops, a relatively small number are permitted to exceed 20 dBrnc; however, in no case should 30 dBrnc be exceeded. Figure 3-18 shows the action recommended in relation to measured noise on loops. The table separates short and long loops;

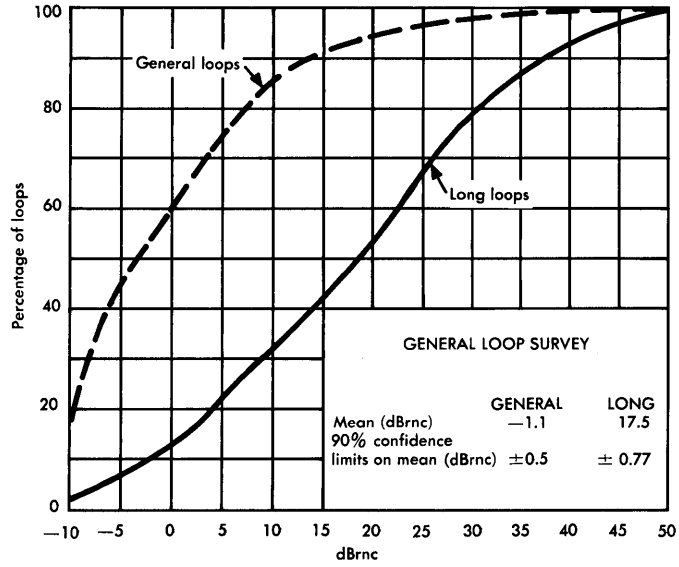

(a) All loops

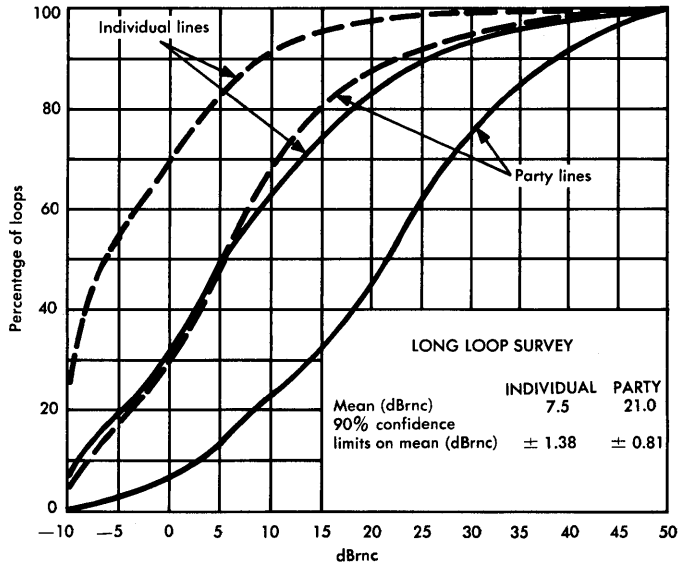

(b) Indvidual and party loops

General loop survey, 1964

Long loop survey, 1964

Figure 3-16. Metallic noise at station set with central office termination at the main distributing frame.

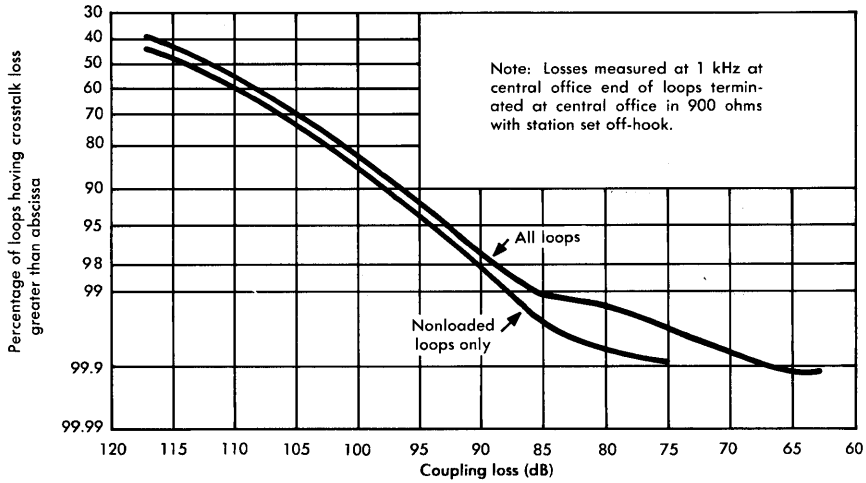

Figure 3-17. Near-end crosstalk coupling losses for loops.

somewhat relaxed recommendations are given for long loops, thus recognizing the effects of greater exposure and increased use of signalling and gain devices. Careful design, construction, and maintenance of long loops assure that noise is minimized, although the final measured result may fall acceptably within the 20 to 30 dBrnc range. When noise on a long loop does exceed 30 dBrnc, further analysis and

NOISE, dBrnc	SIGNIFICANCE	ACTION RECOMMENDED	
		SHORT LOOPS	LONG LOOPS*
20 or less	Objective for all loops	Further analysis not necessary	
21 to 30	Loop noise marginal as 30 dBrnc approached	Further analysis and investigation	Review to assure design and construction best possible
Greater than 30	Unacceptable	Immediate investigation	Further analysis and investigation

*Provided under long route design plan.

Figure 3-18. Loop noise objectives and requirements at station set.

NOISE, dBrnc		ACTION RECOMMENDED	
TO ON-HOOK STATION	TO OFF-HOOK STATION	SHORT LOOPS	LONG LOOPS*
10 or less	5 or less	Further analysis not necessary	
11 to 20	6 to 15	Further analysis and investigation	Review to assure design and construction best possible
Greater than 20	Greater than 15	Immediate investigation	Further analysis and investigation

*Provided under long route design plan.

Figure 3-19. Loop noise objectives and requirements at central office.

investigation are indicated to make sure the best possible design has been selected and that all construction and installation details conform to standard practices.

Central Office Measurements of Loop Noise. While loop noise is measured most accurately at the station set as just described, such measurements are time consuming and expensive. Central office measurements can be made much more conveniently with adequate accuracy for survey purposes and for the preliminary evaluation of loop noise conditions. These measurements can be made to on-hook or off-hook stations. Figure 3-19 provides guidelines for the interpretation of such measurements. The data were developed from central office and station noise measurements on the same group of subscriber loops.

3-4 THE OUTSIDE PLANT PLAN

The Outside Plant Plan is designed to optimize the long-term cost of engineering, constructing, administering, and maintaining the local cable network. The plan is intended to help appraise the outside plant requirements of a wire center area through an evaluation of the various available alternatives. When it is fully implemented, outside plant loop transmission characteristics may be expected to stabilize and to be much more predictable.

Once developed, the plan should be reviewed periodically and expanded or modified to reflect the most current data. The plan is the

fundamental plan for the area; it must conform with objectives concerning out-of-sight plant, permanently connected plant, and must be consistent with long-range road and land use plans and with zoning regulations. Interactions among plant extension studies, commercial forecasts, and the Outside Plant Plan must be recognized to ensure that long-range fundamental objectives are reflected. A well-developed and well-documented plan provides the basis for orderly expansion of outside plant facilities in line with overall objectives and optimal costs.

Procedures are also available for establishing an economical outside plant improvement program. These procedures are covered by a *Facilities Analysis Plan* that acts as a monitoring and managing system on the loop network. With this plan, a wire center area is organized into geographic units called allocation areas. These are used as the basis for collecting facility and maintenance activity data and for planning changes and/or additions to feeder and distribution plant. The plan provides cost analyses, problem diagnosis, analysis of selected plant improvements, and the setting of objectives for reductions in maintenance and facility activities.

Development of the Outside Plant Plan

In order to provide a systematic approach and to allow periodic review and modernization, certain basic steps should be followed in the initial development of an Outside Plant Plan. However, these steps are not rigidly defined or specified.

Feeder and Branch Feeder Cable Locations. The economical layout of the local plant cable network is closely related to its geometric arrangement. Branch feeder cables intersect the main feeder route and provide facilities to the feeder route boundary. This configuration is commonly referred to as *pine tree geometry*. Figure 3-20 shows pine tree geometry and, for comparison, another configuration called *bush geometry*. Studies indicate that the savings of the pine tree over the bush geometry range from 5 to 30 percent of present worth of expenditures.

The ideal wire center area, having outside plant cabling in a perfect pine tree configuration, never exists. The configuration in a given wire center area must be determined by means of an economic analysis of various alternative configurations. These different configurations can often be evaluated best by a computer using EFRAP. All con-

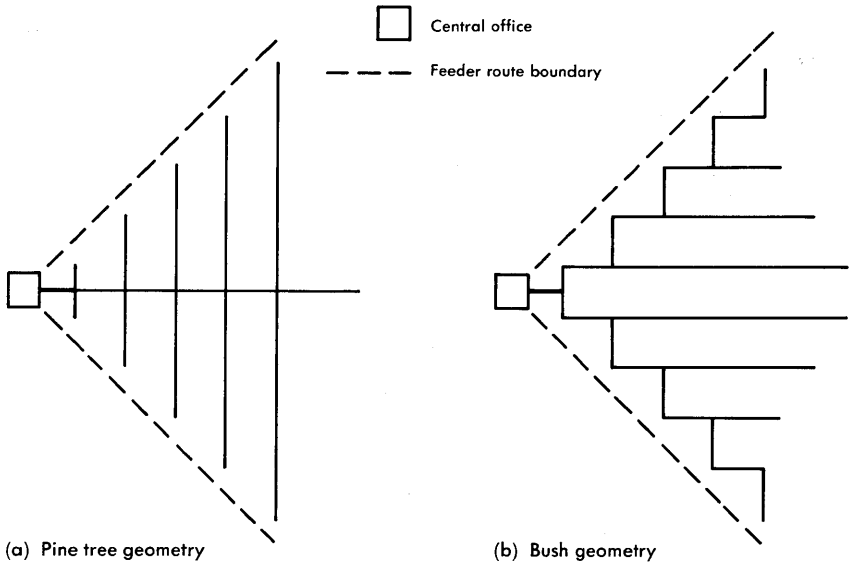

Figure 3-20. Loop cable layout geometry.

figurations or plans under study must provide enough cable pairs of the proper gauge to serve the demand. In order to ensure that each plan provides the necessary facilities, the area is subdivided into allocation areas.

Allocation Areas. An allocation area is a geographical area with well-defined boundaries that is the primary unit of plant for feeder pair administration. It has one connection point to the feeder cable plant and generally consists of one or more serving or distribution areas. An allocation area is served by only one transmission design; i.e., the same cable gauge is used within a given allocation area. In developing an Outside Plant Plan, each allocation area should be delineated and organized to minimize loop length variations.

Distribution Areas. Feeder cable pairs are committed to serve distribution areas one or more of which may make up an allocation area. Complements of feeder cable pairs are first assigned to an allocation area and then committed to individual distribution areas within the allocation area. The distribution area is called a serving area if it is

fed from a serving area interface. Distribution areas can also contain dedicated plant elements such as control and access points. A distribution area may also be fed by one or more cross-connection boxes or laterals.

Growth Forecast. The outside plant forecast provides the basis for the timing, sizing, and arranging of additions or extensions to the outside plant network. Accurate predictions of the magnitude and location of future demands for service are needed for the development of an Outside Plant Plan and an optimal construction program. After the forecast has been made, the expected growth must be spread in the applicable distribution areas as logically as possible on the basis of available information. The manner in which the expected growth is spread in these relatively small areas can be a critical step in the planning process. (If it is done properly, the resulting Outside Plant Plan and construction program are very nearly optimum.) After the forecast is spread, the existing and alternative configurations may be evaluated.

A well-developed Outside Plant Plan incorporates all of the feasible alternatives which may provide economies. Alternatives that must be considered include the outside plant design options, transmission design options, and the application and use of pair gain system techniques.

Boundary Changes. Feeder route, wire center, allocation and distribution area boundaries are well-defined but there are occasions when changes should be considered. The economic advantages of changing a boundary, such as the wire-center area boundary, should be evaluated completely in terms of outside plant since savings are often possible through the coordinated efforts of several engineering and planning organizations.

Out-of-Sight Plant. An alternative to aerial cable, considered increasingly attractive by the public, is out-of-sight plant. The economic factors involved in providing below-ground facilities are constantly evaluated and action is taken on the basis of company policy. The decision is not necessarily one of least cost but rather one of planning a program to meet ecological objectives with the least penalty.

Unigauge Versus Resistance Design. These are transmission design alternatives which result in comparable loop loss distributions. Figure 3-21 shows the combinations of conductor gauge, loading, and central office equipment that are available for various loop lengths

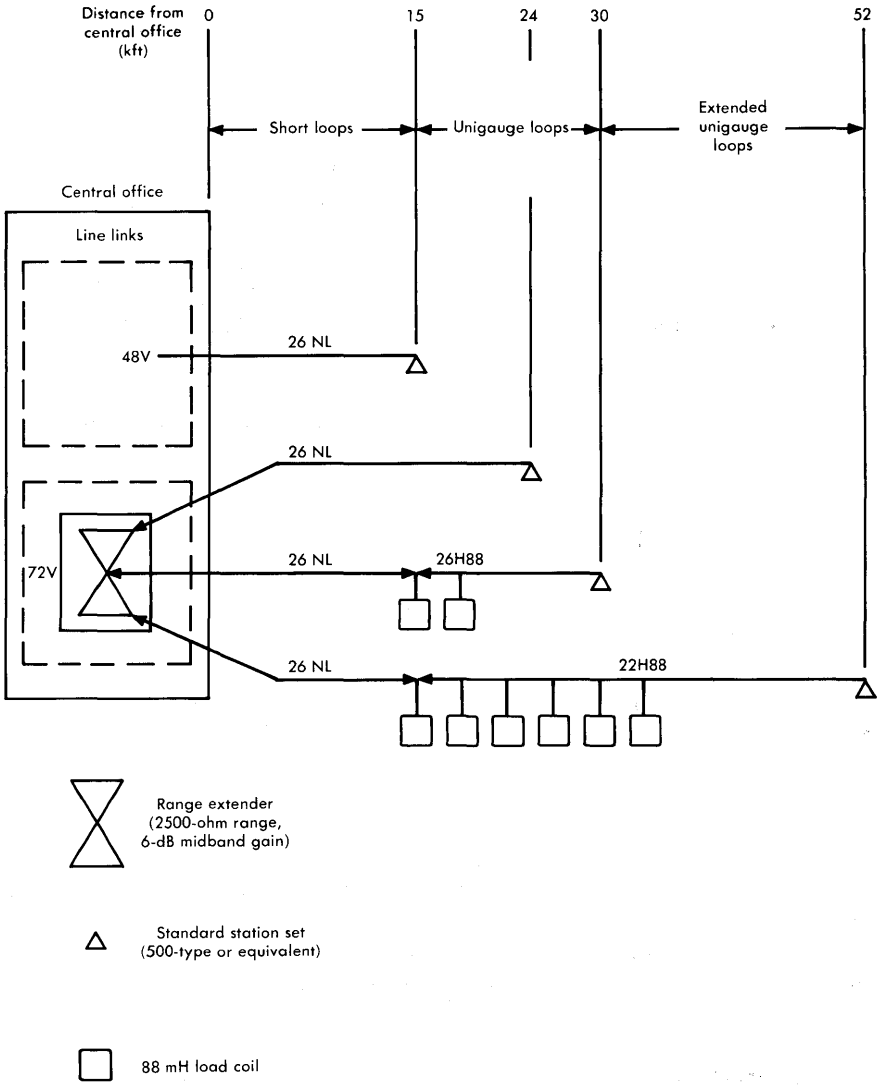

Figure 3-21. Unigauge design plan for loops.

under the unigauge design. These designs represent economic alternatives involving central office equipment and outside plant facilities. A complete analysis is necessary to make a valid choice; however, unigauge is generally more economical in residential areas where there is a relatively high growth rate at distances in excess of 15 kilofeet from the central office where the percentages of coin, multiparty, and special service loops are low.

The savings associated with unigauge can be realized only as new plant is added. The unigauge design has certain advantages over resistance design but these must be weighed carefully against certain disadvantages. Generally, a finer gauge of wire is used with unigauge; as a result, copper costs are lower. When the finer wire gauge is used, there tends to be a significant increase in conduit efficiency; i.e., for a given conduit size, more pairs can be furnished. Loading is required in fewer circumstances and overall loading costs are thus lower. Since a single gauge of wire is used in most cases, fewer rearrangements must be made to accommodate gauge requirements. Considerable study is necessary to determine the suitability of the unigauge design in any wire-center area. All affected areas must be included in the economic analysis.

The disadvantages associated with the unigauge design include an increase in central office equipment costs. Various electronic components, such as range extenders, are required and equipment modifications are necessary in No. 5 crossbar offices. Building space requirements are increased and there are also some increases in traffic and plant operating costs. Finally, it is important to note that the unigauge design is not adaptable for use with all types of switching machines and, in some cases, cannot meet special service transmission requirements.

Long Route Design. This transmission design is applicable to those routes which serve customers relatively distant from the central office where forecasted customer density is low. The design achieves economies by using finer gauge cables and adding electronic equipment to maintain transmission, signalling, and supervision performance comparable to that achieved under the resistance design plan.

Subscriber Pair Gain Systems. In the preparation of an Outside Plant Plan, another alternative to be considered, particularly in a rural environment, is the use of an analog or digital subscriber line carrier

system or a subscriber loop concentrator switching system. The application of pair gain systems often saves cable and structural additions.

There are several analog carrier systems that provide from four to eight channels on one cable pair at costs that are competitive with the costs of loops provided under long route or resistance design plans. Single-channel analog subscriber carrier systems are also available for use in urban and suburban environments.

A digital subscriber loop carrier system, such as the SLC*-40 System, may also be an economical solution to problems involving the provision of service in rural areas. This system can serve up to 40 loops over two cable pairs from the central office by using a T1-type repeatered line. An additional two pairs are used as a protection facility which may protect service on up to 11 working systems by automatic protection switching arrangements. The SLC-40 System includes a remote terminal from which service is extended by standard loop distribution facilities to customer premises.

Subscriber loop concentrator switching systems provide pair gain by concentrating a number of subscriber lines onto a fewer number of trunks between the central office and remote terminals.

Evaluation of the Alternatives

Several computer programs are available to assist in the evaluation of the many outside plant design and administration alternatives. Without these programs such studies would be impractical.

Exchange Feeder Route Analysis Program. This is the most comprehensive program currently available to assist in feeder route design. It uses study techniques involving present worth of annual costs (PWAC) to determine the timing and sizing of cable and conduit relief in a route. Many alternatives may be submitted to the computer covering a single feeder route problem; a separate analysis of each alternative is made. The computer selects the most economical.

The feeder network is divided into sections which can be engineered as a unit. Data relative to each section are entered in the program which then accumulates the requirements by gauge (using either resistance design or unigauge design, as specified) and rigorously

*A trademark of the Western Electric Company.

searches every possible cable placement to determine that series of actions which would result in minimum PWAC over the analysis period. The EFRAP program is a powerful tool which allows the analysis of many alternatives ordinarily not evaluated. It may be used to test the effects of modified growth rates, reroutes, area transfers, varying construction costs, or alternate types of structure. A nonoptimum solution with a reduced first cost may also be determined. This option is sometimes especially important in conserving capital funds while the construction budget is being formulated.

The heart of the EFRAP program is the *decision tree.* The program selects a cable which can satisfy a shortage. This selection results in another shortage at some future time, which must also be satisfied. Each time a shortage occurs, there are several courses of action which can satisfy the demand. The combination of all the branches resulting from shortages is called the decision tree; it contains every practical solution for each section. The EFRAP program calculates the PWAC for every combination of placements for a section and prints the one with the lowest PWAC as the solution.

Before the search through the decision tree, EFRAP determines the demand by gauge for each section and year. The program calculates a gauge makeup for the requirements of each section by solving the simultaneous equations used to derive a resistance design worksheet. The allocation area(s) fed by one EFRAP section has a single transmission design, i.e., the design required to serve the longest distribution loop for the section(s).

The section-by-section solutions must be taken from EFRAP and analyzed to determine the best overall plan for the route. Intangible factors and certain costs, such as those of central office equipment, must be considered in addition to the EFRAP solution. Sound engineering judgment cannot be replaced by mechanized procedures. The computer simply removes much of the drudgery from the job, leaving more time for analysis and refinement of the Outside Plant Plan.

Time-Share Cable Sizing Program. The feeder cable sizing algorithms of the EFRAP program may be used to study variations in an interactive environment of alternative solutions to problems in one section of plant by use of the TICS program. The TICS program requires economic and cable usage data for the section under study and makes it unnecessary to repeat a complete EFRAP study where variations in only one section are of concern. Thus, the TICS program can be

used to smooth the output data generated by the EFRAP program and to determine the effects of changes in particular sections of plant.

Economic Alternative Selection for Outside Plant. Cost comparisons of up to 12 alternate plans for the addition, removal, or rearrangement and repair of outside plant equipment can be made by the Economic Alternative Selection for Outside Plant (EASOP) program. The computer output of an EASOP study is a printout of either the PWAC or the present worth of expenditures (PWE) for each plan.

Loop Carrier Analysis Program. When consideration of outside plant facilities includes the possible use of distributed analog subscriber carrier systems, planning and economic analysis may be carried out by means of LCAP. This program provides PWAC and first cost information on specific combinations of wire gauges and electronic system designs. The LCAP program is designed to evaluate combinations of voice-frequency cable pair circuits and carrier derived circuits against the cost of providing service entirely on voice-frequency cable pairs.

Long Feeder Route Analysis Program. This program is used to assist in planning and designing facilities for a route where the use of large-capacity lumped pair gain systems is an alternative to ordinary cable pair facilities. It provides PWAC and installed first cost information for problems involving cable and voice-frequency range extension electronics and for those involving a combination of cable facilities and pair gain systems.

Other Planning Considerations

While considerations of design configuration, administration, and transmission performance are the backbone of a properly developed Outside Plant Plan, additional items are involved in the development. The items covered here are not all-inclusive but represent those most frequently encountered.

Special Services. With the substantial increase in demand for special service circuits in recent years, the effects of special requirements imposed on the Outside Plant Plan by these circuits must be taken into account. Generally, there are two alternatives: (1) the use of electronics such as repeaters, amplifiers, and carrier systems in the local network to meet transmission requirements; or (2) the use of a coarse-gauge cable to provide the generally lower loss requirement

of such special circuits. Analyses of the alternatives must be made to determine the most economical arrangement.

Centrex. The standard procedure for the provision of circuits for centrex service must be followed. The procedure involves a number of basic steps that are required if service is to be provided economically and if the circuits are to meet transmission objectives. For example, periodic marketing reviews of anticipated service requirements are conducted for each large PBX and centrex location. Engineering and traffic studies must be made to determine the best serving arrangement for each case. These studies must take into consideration the customer location, present and anticipated service requirements, existing serving equipment arrangements, and outside plant considerations.

Once determined, the potential centrex requirements can be included in the outside plant and central office planning processes. Certain arrangements for centrex-CO service require special treatment of outside plant facilities in order to meet transmission requirements.

REFERENCES

1. Hinderliter, R. G. "Transmission Characteristics of Bell System Subscriber Loop Plant," AIEE Summer General Meeting, Denver, Colorado, June 17-18, 1962, Paper 62-1198.
2. Gresh, P. A. "Physical and Transmission Characteristics of Customer Loop Plant," *Bell System Tech. J.*, Vol. 48 (Dec. 1969), pp. 3337-3385.
3. Manhire, L. M. "Physical and Transmission Characteristics of Customer Loop Plant," *Bell System Tech. J.*, Vol. 57 (To be published Jan. 1978).

Chapter 4

Range Limits

Range considerations for the various types of central office switching machines and private branch exchange (PBX) systems have had a significant effect on the nature of the loop plant. With some types of machines, the length and gauge of cable are limited by the office signalling or supervisory range rather than transmission performance. The various factors and limitations which determine office loop ranges must be considered in the determination of loop plant characteristics. The factors that limit the ranges of PBX-central office trunks and PBX station lines are closely related to central office loops and thus contribute to loop plant characteristics.

4-1 LOOP RESISTANCE LIMITS

The basic function of a loop is to provide a two-way voice-frequency transmission path between a central office and a station set. It must also provide a dc path to operate the station set microphone and a transmission path for supervisory, address, and ringing signals. The loop length over which these signals may be transmitted is limited by the conductor resistance of the loop and is influenced by the characteristics of the equipment at both ends.

Direct Current

The 500-type telephone set, the major type in service today, is designed to operate satisfactorily with a minimum loop current somewhat less than 23 milliamperes. The efficiency of the carbon microphone in the 500-type set decreases with loop current and deteriorates rapidly with currents less than 23 milliamperes. Furthermore, TOUCH-TONE® signalling circuits require a minimum of 20 mA.

The nominal maximum of 1300 ohms is the value of resistance to which loops are administered for control of outside plant facility insertion losses under resistance design rules. A typical central office supplies loop current from a 48-volt battery through a 400-ohm battery feed circuit. Other resistances that determine loop current include allowances of 300 ohms for the telephone set, 25 ohms for 500 feet of drop wire, 10 ohms for central office wiring, and a 10 percent allowance (a maximum of 130 ohms) for resistance increase with temperature.

Supervisory and Dial Signalling Limits

The maximum loop resistance that can be tolerated in connection with supervision and dial signalling is usually determined by the operating parameters of the central office line relay, the dial pulsing relay, and the trunk supervisory relay. However, the requirements for ring tripping sometimes establish the maximum loop resistance rather than requirements for the operation of these relays. Equipment reference data for a given type of central office should be consulted to determine the controlling parameter.

Ringing and Ring Tripping Ranges

Although ring tripping is considered a supervisory signalling function, it is discussed here with ringing since ringing and ring tripping circuitry perform integrated functions. Figure 4-1 is a simplified schematic of a ringing signal source (with associated ringing and tripping relays) applied to an individual loop in a step-by-step office. In other types of offices, the principle of operation is similar although circuit details may vary. The interrupter applies the 20-Hz ringing voltage to the circuit in the standard ringing cycle (two seconds ringing, four seconds silent). Battery voltage is applied continuously to the line during the ringing and silent periods so that the ringing may be tripped whenever the switchhook contacts are closed at the station set. The combined 20-Hz and dc voltages are applied to the line through the tripping relay, F, when relay K is operated under the control of the switching machine. When the call is answered, the switchhook of the station set completes a dc path through the P winding of the tripping relay. If the loop resistance is low enough, the tripping relay operates. It is held operated during the call by means of a tripping lock-up circuit provided by the S winding, the battery, and the make-first contract, designated (1). The other contacts of the

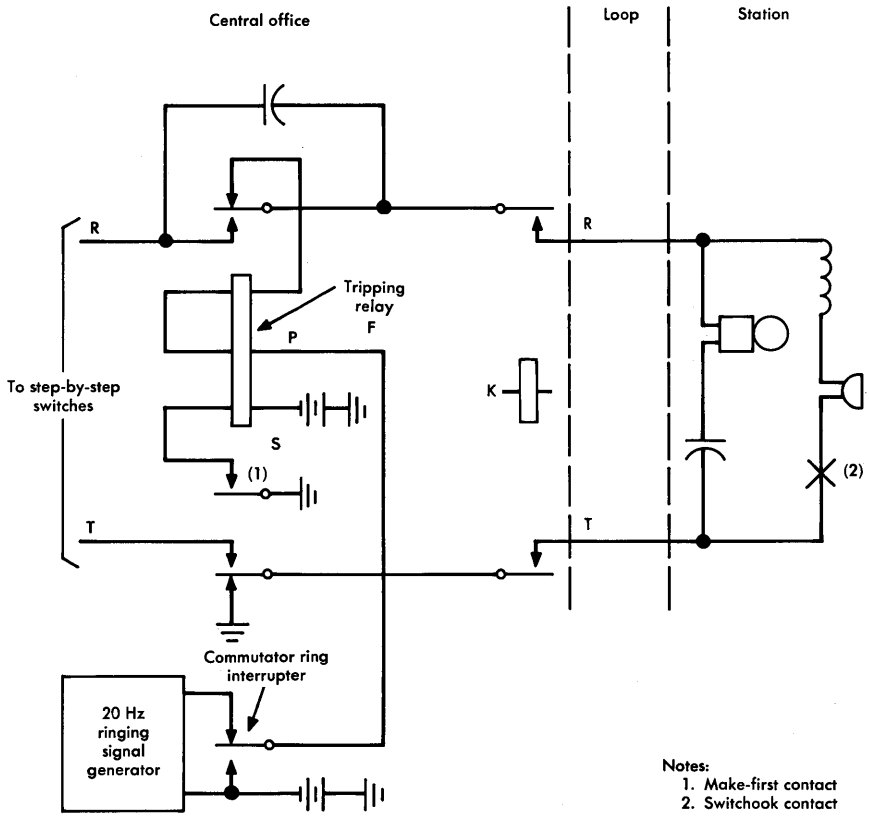

Figure 4-1. Ringing and ring tripping in a step-by-step office.

F relay remove ringing from the line and place the line in the talking condition. At the conclusion of the call, the F relay is released by circuits not shown in Figure 4-1.

Ringing ranges for loops depend on a number of factors such as station equipment, central office arrangements, and loop conditions. At the station set, the type of ringer, its sensitivity, the adjustment of the bias spring, the number of ringers, whether they are bridged or grounded, and the type of ringer coupling circuit may all affect the loop resistance range. The line capacitance, line leakage, and earth potential differences are among the loop conditions that must

be taken into account. Loop range data are usually based on 19-gauge cable characteristics. In modern plant, line leakage is usually in the range of 1 to several megohms. For this reason, present ringing ranges are based on at least 100,000 ohms leakage resistance for any line. Finally, the values of ringing voltages (both ac and dc), the ringing source impedance (tripping relays, current limiting resistors, or lamps), and the type of ringing (individual, selective, semiselective, ac-dc, superimposed, etc.) must all be known in order to determine the loop ringing range.

Ringing ranges are based on the low probability that all of the variable factors resulting from the wide variety of ringing configurations are simultaneously adverse. However, failure to ring is normally precluded by ringing verification at the time of installation; appropriate ringer selection and/or adjustments are made as required. Routine outside plant construction work which alters the makeup of working loop plant or changes resulting from area transfers may result in some action being required to ensure satisfactory ringing under the new conditions.

Ringing ranges for individual line, PBX station, coin, and two-party service are based on the assumption that standard 20-Hz ringing voltage is applied through a tripping relay and that station sets have capacitor-coupled ringers. The maximum loop conductor resistance (station set excluded) differs for each type of station configuration and generally declines as the number of ringers increases. Tables are available for the determination of maximum loop conductor resistances with various combinations of the variables involved. In some cases, it is also necessary to specify a minimum conductor loop resistance in order to prevent premature operation of the tripping relay (pretripping).

The tripping range is determined by the various ac and dc power sources, the loop leakage, and the type of tripping relay used and its adjustments. Increases in assumed leakage resistance now make it possible to use weaker operate and nonoperate adjustments (less current required) for the tripping relays in many cases, thereby extending the maximum loop range in tripping-limited offices.

Tabulated loop resistance values usually include the resistances of the station set and the customer loop. In determining the maximum nominal loop resistance at 68°F, the station set resistance (300 ohms

for a 500-type set) must be deducted from the tabulated values and an allowance must be made for increased loop resistance at temperatures above 68°F. Moreover, variations in individual central office tripping relay arrangements, leakage assumptions, battery voltage regulating arrangements, types of line relays, etc., may exist and must be taken into account.

Overall Central Office Range Limits

As previously discussed, the determination of the controlling range limit is a complex process. No general rules cover all possible configurations of equipment and facilities. Range limits vary widely for different types of central office switching machines and can vary considerably among offices of the same type. It is common practice for operating companies to prepare lists of specific central office range limits for each of the offices in the company. Such lists are periodically updated as new switching machines are added or as existing offices are modified in a manner which would affect range limits.

4-2 PBX TRUNK AND STATION LINE RESISTANCE LIMITS

Most of the preceding discussion is based on the assumption that only message network station lines are connected to the central office. If the central office also serves PBXs, there are additional considerations involved in determining the maximum conductor resistance of PBX-central office trunks and PBX station lines for a given central office configuration, especially where trunks and station lines are cut through in the PBX-central office trunk circuit rather than coupled by repeat coil circuitry.

Limiting Factors

Four major factors limit the resistances of PBX-central office trunks and PBX station lines. These factors, which are different in the various types of central offices, and the limiting effects of each are: (1) the PBX power supply and the line and connecting circuit options have a direct influence on the signalling and supervision ranges on station-to-station calls within the PBX; (2) the PBX-central office trunk resistance may be limited by ringing and supervision requirements on calls between the central office and the PBX attendant; (3) the interrelated loop conductor resistances of PBX-

central office trunks and PBX station lines may be limited by supervision requirements on incoming or outgoing PBX station calls through the central office; (4) the combined loop conductor resistances of PBX-central office trunks and PBX station lines may be limited by the station set minimum current requirement.

The limitation on station-to-station calls within the PBX is straightforward. Station line conductor resistance may not exceed the value which is established for the PBX involved, a limit particularly related to the type of PBX power supply used and to the circuit options. Where the PBX uses a low-voltage power supply and where circuit options are highly resistive, station line lengths are shorter than in other types of PBXs.

The maximum trunk conductor resistance depends on trunk ringing and holding ranges involving circuits at both the central office and the PBX such as the circuit that responds to the central office ringing signal (ring-up relay) and the ac ringing voltage of the central office ringing supply. In panel- and crossbar-type offices, the central office sender circuit operation depends on the design of PBX attendant dial circuits and cord circuits. Earth potential differences between the central office and the PBX may also influence the operation of these circuits and thus indirectly affect trunk conductor resistance limits.

The PBX-central office trunk and PBX station line resistance limits are interrelated by several factors. The total trunk and line resistance for any connection must satisfy the supervision requirements at the central office and at the PBX. On a night connection or a direct dial connection, the sum of the two resistances cannot exceed the individual subscriber line supervisory limit for the central office; the resistance of any series relays in the PBX circuits must be included in this total. On an incoming call to the PBX completed by the attendant, the PBX supervisory relay must operate when the call is answered at the PBX station. The relay current is reduced by the shunt connection of the PBX holding circuit. Finally, minimum loop current station set requirements must be satisfied. On many calls completed by the PBX attendant, resistance is bridged across the circuit after the call is established to hold the central office equipment. This resistance shunts the loop current and must be accounted for in determining trunk and station line combined resistance limits.

In order to determine the PBX trunk and station ranges, all four of these factors must be considered. Information must be obtained regarding the PBX and the central office, and the circuit configuration for each factor must be determined before the range calculations are made. The limiting range is the lowest of the values obtained when all four factors have been considered. If the actual range exceeds the calculated maximum, dial long line equipment may be required to provide added signalling range and to restore the line current to the required value.

Range Charts

Since the indicated procedure is laborious and time consuming, range charts have been developed to simplify obtaining PBX range data [1]. The latest series of charts takes all of the range factors into account. Trunk and station line ranges are given for commonly used PBXs connected to various widely used central office configurations.

A brief example is given to illustrate the use of range charts and to show the interdependence of trunk and station line ranges. Figure 4-2 is an excerpt from a set of range charts for a No. 5 crossbar office with a 1360-ohm loop conductor supervisory limit. The office is assumed to have a standard —48V battery, 400-ohm battery feed circuits, and standard ringing voltages. The range chart in Figure 4-2(a) applies to certain PBXs using 10-cell local batteries; the PBX station lines are equipped with line relays. Figure 4-2(b) is an intermediate table which tabulates data common to several charts in the set between certain resistance ranges.

The right column of a range chart shows station line resistances in descending order. The left column shows the corresponding trunk resistances. Trunk resistances must be known to determine the corresponding station resistances, or vice versa. If the trunk resistance is known, the chart in Figure 4-2(a) is interpreted from top to bottom as follows:

(1) For trunk resistances between 0 ohms and 445 ohms, the maximum allowable loop resistance is 850 ohms (controlled by station-to-station PBX calls), as indicated by the first two rows.

(2) For trunk resistances greater than 445 ohms, the loop resistance must be reduced due to one or more of the other factors.

RANGE LIMIT, ohms	
TRUNK	STATION
0	850
445	850
*	*
665	675
†	†
1340	0

*See intermediate table below.

†Deduct the known trunk conductor loop resistance from 1340 ohms to obtain the permissible station conductor loop resistance. Where the station conductor loop resistance is known, deduct this value from 1340 ohms to obtain the permissible trunk conductor loop resistance.

(a) Range chart for No. 5 crossbar central office and 507A- or 507B-type PBX

TRK	STA	TRK	STA	TRK	STA	TRK	STA	TRK	STA	TRK	STA
295	1005	360	930	420	870	485	810	555	750	645	690
310	990	370	920	430	860	495	800	570	740	660	680
320	975	380	910	440	850	510	790	585	730		
330	965	390	900	450	840	520	780	600	720		
340	950	400	890	460	830	530	770	615	710		
350	940	410	880	470	820	545	760	630	700		

Note: Limits shown in this table result from supervisory relay operating current requirements.

(b) Intermediate table

Figure 4-2. Example of a range chart for determination of limiting PBX trunk and station line resistances.

For trunk resistances between 445 ohms and 665 ohms, the asterisk (third row) indicates that the intermediate table should be used to determine the corresponding loop resistance. Note that only a portion of the intermediate table applies to this particular configuration. The controlling factor that causes the reduced loop limit is given in Figure 4-2(b).

(3) For a trunk resistance of 665 ohms, a 675-ohm loop limit is imposed (fourth row).

(4) For trunk resistances between 665 ohms and the maximum of 1340 ohms, a dagger (fifth row) indicates that the footnoted instructions below the range chart should be used to determine the applicable station line resistance limit. Normally, the limiting factor in establishing the sum of trunk and station line resistances at a figure such as 1340 ohms is the through-dial central office range, central office line relay range, ringing range, or some other similar factor.

Range charts for other PBX configurations are similarly interpreted. There may be no applicable intermediate table or there may be several, each keyed by a number of asterisks. It is important to determine the options to be used with a given PBX since the ranges within the tables may be modified by a footnote pertaining to a particular option.

REFERENCE

1. Weinberg, S. B. "New Range Charts for PBX Operation," *Bell Laboratories Record,* Vol. 41 (Jan. 1963), pp. 12-17.

Chapter 5

Design Considerations

Since every connection between subscribers includes a customer loop at each end, the transmission performance of the loop plant significantly affects overall connection performance. However, the large number of loops, variety of lengths, varying density of customers along given routes within a wire center area, and increasing inward and outward customer movement would make transmission design of each individual loop both prohibitively expensive and operationally not administrable. Therefore, the transmission design of loop plant is treated statistically. Either the gauging of feeder and distribution routes is planned so that certain maximum resistance values are not exceeded in any distribution area, or general prescription transmission and signalling designs are applied. These designs vary with resistance ranges on routes where economics make advantageous the use of finer gauge cable with electronic supplements. Since serving central offices are generally located near the population center of a given wire-center area, a distribution of transmission losses results so that most losses are less than the loss corresponding to the limiting resistance within the design range. When properly administered, this approach to the design of loop plant is economically sound and, when the entire local plant universe is considered, produces transmission grades of service that meet overall objectives.*

There are three basic design methods used in the loop plant—resistance design, unigauge design, and long route design—which comple-

*In Volume 1 it is shown that grade-of-service computations are made on a statistical basis. Grade-of-service objectives are thus valid for large universes on an absolute basis; for smaller universes, they must be used only on a comparative basis.

ment each other economically and which together produce the desired distribution of transmission parameters. Special design considerations for centrex are also discussed. Transmission statistics from loop surveys are included when appropriate to the discussion [1, 2].

5-1 RESISTANCE DESIGN

Resistance design is a method for designing customer loops based on establishing a common maximum resistance limit for an office. This limit is applied to the longest forecasted loop (far point) in each distribution area contained within a perimeter called the *resistance design boundary*. In most urban and some nonurban areas, the resistance design boundary may coincide with the wire-center boundary. In other nonurban areas, one or more of the long route applications may be more suitable economically for serving distribution areas on the extremities of a route. By applying appropriate rules for controlling transmission loss and/or signalling ranges, use of the resistance design method produces a distribution of loop losses with the majority well below 8 dB. Loop noise is generally controlled by proper administration of the subscriber plant transmission index. When the resultant loop loss and noise distributions are combined with loss and noise distributions for trunks, overall transmission loss/noise grade-of-service objectives are met for the message network. Resistance design remains the basis on which the majority of loop plant is installed.

In addition to the resistance design boundary, certain other terms associated with resistance design must be defined:

(1) The *resistance design limit* is the maximum value of outside plant conductor loop resistance to which the resistance design method is applicable. This value is set at 1300 ohms, primarily to control transmission loss.

(2) The *resistance design area* is that area enclosed within the resistance design boundary.

(3) The *office supervisory limit* is the conductor loop resistance beyond which the operation of central office supervisory equipment is uncertain.

(4) The *office design limit* is the maximum resistance to which loops should be designed for a particular office. This is the supervisory limit for those offices with supervisory limits less than 1300 ohms; otherwise, the resistance limit of 1300 ohms controls.

(5) The *design loop* is the customer loop under study in a given distribution area to which the office design limit is applied to determine the conductor gauge(s). It is normally the longest loop expected during the period of fill of the cable involved.

(6) The *theoretical design* is the cable makeup consisting of the two finest standard consecutive gauges necessary in the design loop to meet the office design limit. Theoretical design does not take into consideration any possible economic advantages of reusing existing coarser gauge cable pairs.

Basic Procedures

The application of resistance design to telephone loops begins with three basic steps or procedures. These are (1) the determination of the resistance design boundary, (2) the determination of the design loop, and (3) the selection of the cable gauge or gauges required to meet the design objectives.

Determination of the Resistance Design Boundary. The resistance design method should be applied to the bulk of loops in areas where customer density and/or growth potential are moderate to heavy. For more sparsely settled areas, long route applications are often more economical. The resistance design boundary is not necessarily fixed but may be adjusted to accommodate changes in customer density and other economic factors; it should be re-examined with each Outside Plant Plan review or modification.

Determination of Design Loop. The design loop length is based on local service requirements, commercial forecasts, and other relevant data. If the longest loop will ultimately exceed both the present length and the longest proposed in the job being considered, the ultimate length should be considered the design loop and the theoretical design and gauge selection should be based on it.

Some cables may contain pairs which extend outside the resistance design area. These pairs do not control the gauging of the cable but

must be studied on the basis of long route applications. Also, if a major branching point occurs before a gauge change point, each branch may have a different gauge requirement; hence, it may have a separate design loop and must be designed on a separate basis.

Selection of Gauge. The theoretical design is used to determine the gauge or combination of gauges required for any loop. When more than one gauge is required, the most economical design, if considerations of existing plant are temporarily neglected, results from use of the two finest consecutive standard gauges that meet the office design limit. It is normally most advantageous to place the finer gauge cable closest to the office where a larger cross section is normally required. Since the design loop length is known, and the resistance per kilofoot for each gauge may be determined from tables such as that of Figure 5-1, the theoretical design can be obtained from the solution of two simultaneous equations. For example, if the design loop is to be 32 kilofeet, it can be seen from Figure 5-1 that 32 kilofeet of 24 gauge would exceed 1300 ohms and 32 kilofeet of 22 gauge would be somewhat less than 1300 ohms; therefore, a combination of 22 and 24 gauge is required.

One of the the simultaneous equations may be written

$$x + y = 32 \tag{5-1}$$

where x is the length of 24-gauge cable and y is the length of 22-gauge cable making up the 32-kilofoot design loop. Since the total resistance should equal 1300 ohms, including the resistance of any load coils (loops exceeding 18 kilofeet require loading), the second equation may be written

$$51.9x + 32.4y + 5(9) = 1300 \quad \text{ohms} \tag{5-2}$$

where 51.9 and 32.4 are the resistances at 68°F in ohms per kilofoot of 24-gauge and 22-gauge wire pairs, respectively, 5 is the number of required load coils, and 9 is the resistance of each load coil. Equations (5-1) and (5-2) can now be solved simultaneously to yield

$$x = 11.2 \text{ kft of 24-gauge cable}$$

and

$$y = 32 - x = 20.8 \text{ kft of 22-gauge cable.}$$

Other resistance values from Figure 5-1 might be used if local temperatures were significantly different from 68°F.

TYPE OF CONDUCTOR	OHMS/KFT at 68° F	OHMS/KFT at 100° F	OHMS/KFT at 140° F
CABLE			
19 ga	16.1	17.2	18.6
22 ga	32.4	34.6	37.4
24 ga	51.9	55.5	60.0
26 ga	83.3	89.1	96.2
OPEN WIRE			
109 HSS	12.40	13.26	14.32
104 CS (40% conductivity)	4.73	5.06	5.47
URBAN WIRE			
C 16 pr 24 ga	52.0	55.6	60.1
D 16 pr 22 ga	32.0	34.2	36.9
RURAL WIRE			
C 1 pr 0.064 CS (14 ga)	17.0	18.20	19.64
D 6 pr 19 ga	16.4	17.55	18.95
E 12 pr 19 ga	16.4	17.55	18.95
UNDERGROUND WIRE			
B 1 pr 19 ga	16.0	17.1	18.5
C 1 pr 16 ga	8.0	8.6	9.2
SERVICE WIRE			
B 2 pr 24 ga	52.0	55.6	60.1
LOADING COILS			
Type 632 88 mh 9 ohms each	—	—	—

Figure 5-1. Loop resistance of commonly used facilities.

While solution of simultaneous equations yields the correct theoretical design and is used in a number of computer applications, a simpler and more flexible method for manual use is a graphical solution using a resistance design work sheet such as that shown in Figure 5-2. This sheet has preplotted slopes corresponding to the resistance per kilofoot at 68°F of 19-, 22-, 24-, and 26-gauge nonloaded cable. As shown, the resistance design limit is a constant 1300 ohms

out to 18 kilofeet and then gradually decreases. The decrease takes into account the resistance of any load coils which in the graphical method is subtracted from the resistance design limit. Thus, resistance curves need not be drawn for loaded cable. If the office design limit is less than 1300 ohms, the line representing this limit must be drawn in parallel to the resistance design limit line and used in establishing the theoretical design. Load coil designations, based on an ideal H88 loading scheme, are shown near the bottom of the work sheet. Ranges of recommended and permissible end section lengths are also given on standard work sheets and the recommended positions of load coils are shown on the basis of an ideal H88 loading scheme. Final location may vary somewhat, depending on the actual length of office end section and various physical constraints, such as available manhole locations. In addition, rules for load spacing deviations must be followed.

When the work sheet is used to establish the theoretical design, a horizontal line equivalent in length to the proposed design loop, or ultimate design loop if longer than the proposed loop, is drawn to scale in the box labeled "Theoretical Design." Next, the point of equivalent length is located on the resistance design limit line (or office design limit line, if lower). Through this point a line is drawn parallel to the preplotted slope for the gauge to the immediate right and its intersection with the next finer gauge slope is determined. The length to this intersection represents the gauge-change point for the theoretical design and the resultant length of each gauge is marked on the line in the theoretical design box.

Once the theoretical design is determined, the makeup of the existing plant is drawn in the upper portion of the box labeled "Present & Proposed Plant." A second, heavier line drawn below the existing plant makeup is then entered for the proposed plant; a dashed line extension to the ultimate length is used, if required. Either the proposed plant makeup may be gauged identically to the theoretical design, or existing plant conditions may be taken into account to establish the actual gauge-change point. This point, when a 2-gauge makeup with the finer gauge at the office end is assumed, may be moved closer to the office if the point falls in the middle of a conduit section or if there is a major branching point within two or three sections of the theoretical gauge change. It may not be moved further from the office with this type of makeup. When duct space is at a premium (under rivers, highways, etc.), it is permissible to

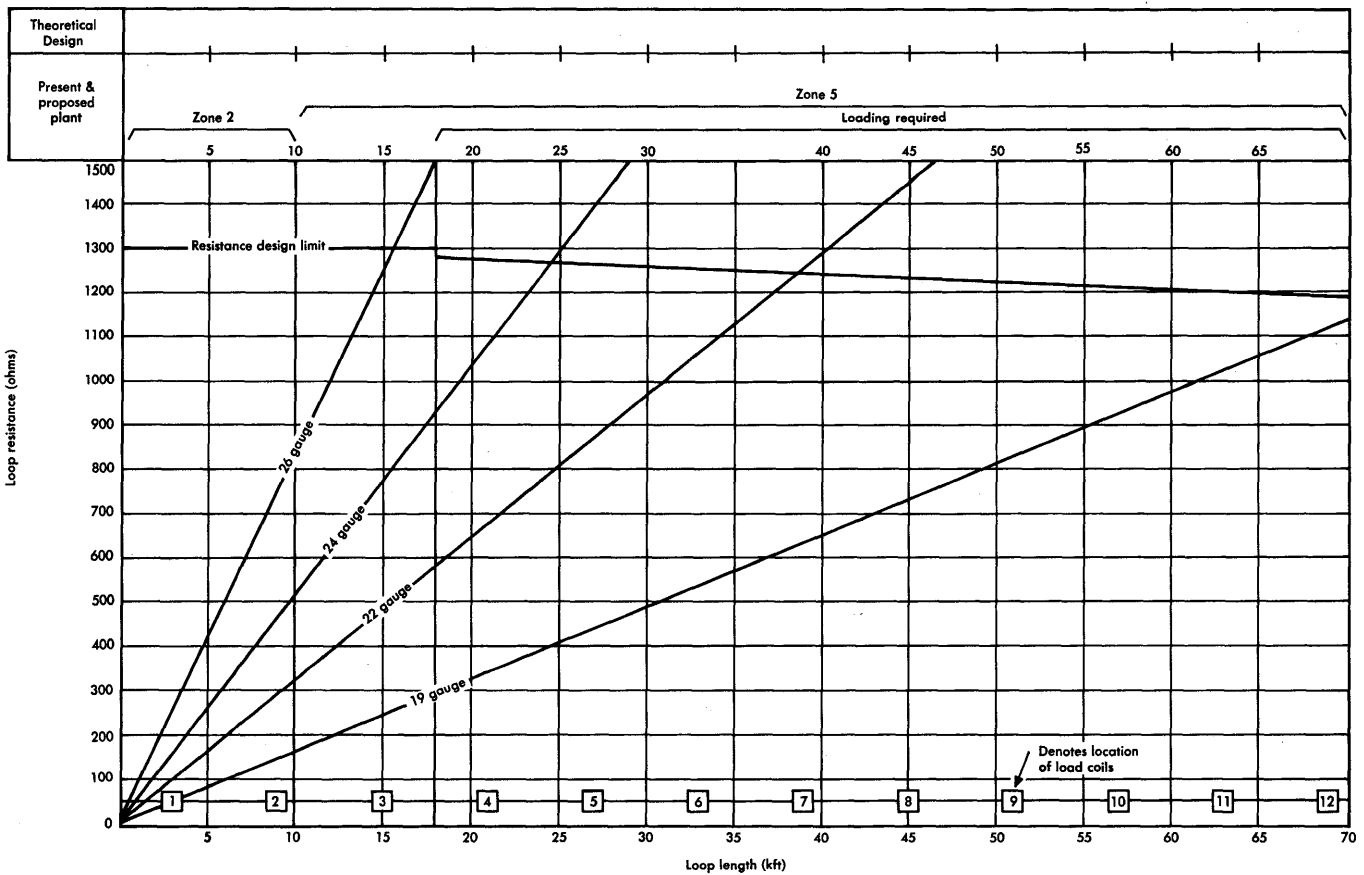

Figure 5-2. Illustrative resistance design work sheet.

deviate from the 2-gauge plan by utilizing finer gauge cable at such a conduit section provided that coarser gauge cable is added in another part of the loop so that the overall office design limit is not exceeded. Deviation from the 2-gauge plan may also be desirable in cases where only part of a route is being reinforced, where the gauging of existing portions does not correspond to the new theoretical design, and where there is an economic advantage in utilizing existing plant. The resistance design work sheet is quite flexible as a tool for handling these situations. Some companies have adopted the practice of allowing up to 1500 feet of 26-gauge cable at the customer end of some distribution cables, provided the 1300-ohm limit is not exceeded. However, the design loop in such distribution areas should not be so gauged. Moreover, this practice tends to bias on the high side the distribution of losses in these areas and should therefore be allowed only where grade of service would not be significantly penalized.

Transmission Considerations

Control of total resistance does not ensure a satisfactory transmission loss distribution unless some additional rules are followed. These include loading all loops over 18 kilofeet and limiting the cumulative length of all bridged taps on nonloaded loops to 6 kilofeet or less.

Loading. The maximum number of load coils consistent with H spacing (6000 feet) should be placed on loops longer than 18 kilofeet. All loading should be H88, although existing loops loaded at H44 need not be changed if they are in areas that are primarily residential. In general, the load coil spacing should meet an objective of 6000 ± 120 feet. Occasionally, deviations greater than ± 120 feet may be allowed for economic reasons, provided the transmission shortcomings are analyzed and weighed against the service provided in the route, especially when data and special service objectives are considered. Wherever possible, it is also desirable to take deviations greater than ± 120 feet on the short side so that correction may later be applied by normal building-out procedures, if required.

Central Office End Section. The central office end sections for each office should be determined locally with due consideration given to the amount of office wiring involved so that the combination is equivalent to 3000 feet of cable. As far as spacing is concerned, the first coil is the most critical in achieving acceptable return loss and must be placed as close to the recommended location as is physically and economically possible.

Customer End Section. The recommended range for customer end sections is between 3 and 12 kilofeet, *including all bridged taps.* In cases where extensive distribution cable was placed on a multiple plant basis, an end section plus bridged tap *limit* of 15 kilofeet has been acceptable. However, the trend toward *permanently connected plant* (PCP) should greatly reduce the requirement for long non-loaded end sections.

Bridged Tap. A bridged tap is considered to be any branch or extension of a cable pair in which no direct current flows when a station set is connected to the pair in use. The cumulative bridged tap limit for nonloaded loops is 6 kilofeet, no matter where the station set is to be connected. An example of how this limit applies is shown in Figure 5-3. If the working station set were connected at points C or D, the cumulative bridged tap would be 6 or 5 kilofeet, respectively, apparently within the 6-kilofoot limit. However, if a working station set were located at points A or B, the cumulative bridged tap would be 13 or 7 kilofeet, respectively. Therefore, such a layout violates the 6-kilofoot limit.

For loaded loops, the limit for bridged tap is combined with end section length, as described previously. Moreover, no bridged tap is permitted between load coils and no loaded bridged tap is permitted under any circumstances.

In some cases, bridge lifters may be employed to eliminate the effect of bridged tap, e.g., for party line services. However, bridge lifters are subject to both administrative and transmission limitations and must be carefully controlled.

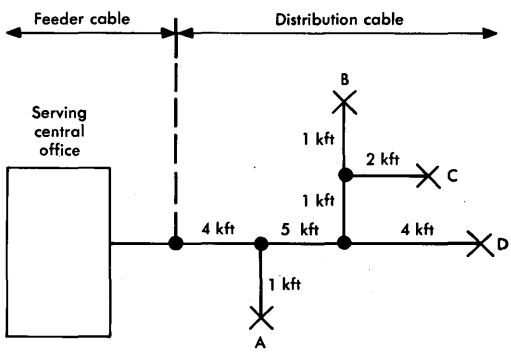

Figure 5-3. Application of bridged tap limit.

Miscellaneous. Resistance design assumes that 500-type telephone sets or equivalent are used exclusively beyond 10 kilofeet from the office, shown in Figure 5-2 as transmission zone 5. They may also be used, but are not required, in zone 2 (up to 10 kilofeet). Since most sets are 500-type or equivalent, selection of the telephone set is usually of minor significance in resistance design.

Multiple line wire and C-type rural wire can also be used in resistance design areas, subject to certain restrictions due to the variable transmission characteristics of nonstabilized types with changes in the weather. Open wire, however, is not recommended and should be replaced whenever relief cable is planned. Nonstaggered twist cable is a source of unacceptable crosstalk and may also fail to meet noise objectives. It should be removed whenever possible and should be used only for nonloaded loops until it can be removed.

Loop concentrators may be used under resistance design rules without significant transmission impairment. Rules are applied to the complete connection from the central office to the station set. However, different types of concentrators have various signalling, control, and supervisory limits which must be taken into account.

Since customer locations served by more than one cable route are subject to transmission contrast, an attempt should be made to select the gauge(s) for each route so that similar losses are obtained.

Transmission Losses. The dashed line of Figure 5-4 shows the computed 1-kHz insertion loss versus loop length for ideal theoretical resistance design loops when a temperature of 68 degrees F and no bridged taps are assumed. Variations from the ideal design in the loaded range (beyond 18 kilofeet), i.e., variations in office and customer end sections and actual load spacing variations, would change the location and, to some extent, the magnitude of the peaks from those shown. However, the figure shows that the highest theoretical losses occur in the nonloaded range between 14 and 18 kilofeet, with a maximum of 7.5 dB at 18 kilofeet. If the effects of bridged taps are considered, additional loss may be encountered. If it is assumed that the average length of bridged tap is about 2.5 kilofeet, the mean value from the 1964 general loop survey, about 0.6 dB of loss would be added. The 6-kilofoot limiting case of bridged tap could add as much as 1.5 dB, depending on the gauge makeup of the basic loop. Hence, the insertion loss for nonloaded loops in the 14- to 18-kilofoot

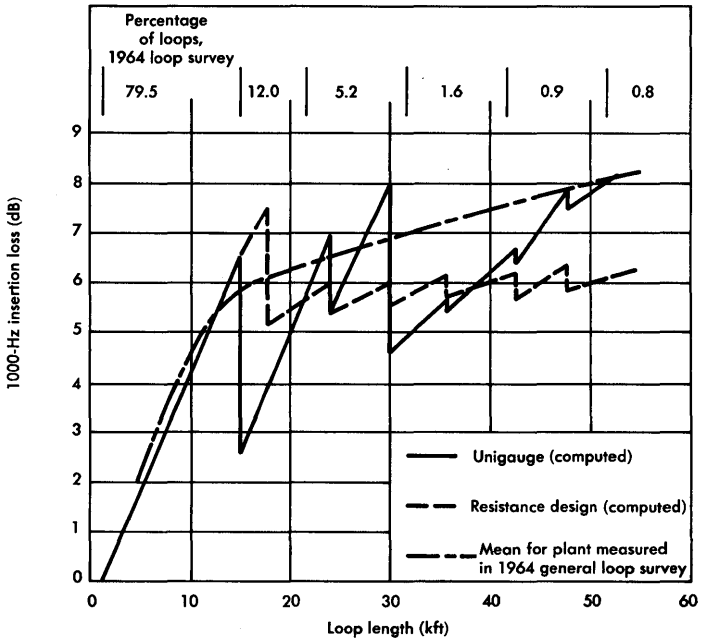

Figure 5-4. Loss comparison of unigauge and resistance designs.

range can approach and in some cases exceed 8 dB, often taken as the maximum desirable insertion loss so that the mean and standard deviation of loss distributions in loop plant are not excessive.* As can be seen in Figure 5-4, the percentage of loops in this range account for a small percentage of the total; therefore, the number of built-up connections with limiting loops at each end is small.

For the general loop universe, computations using mean and standard deviation values from the 1964 loop survey show that the overall network transmission grade-of-service objective is met provided the loop noise objective of 20 dBrnc or less is not exceeded. This noise objective is generally met in most of the loop plant which falls within the resistance design area.

*If the insertion loss is stated as an expected measure loss (EML), it is conventional to add 0.5 dB to the facility insertion loss to account for loss in central office equipment.

The broken line of Figure 5-4 shows mean loss versus length from actual measurements in the 1964 loop survey; losses include those due to bridged taps, end sections, loading irregularities, or other deviations from the ideal theoretical design. The solid line represents the ideal unigauge design 1-kHz insertion loss.

Supplementary Design Considerations for Special Services

The high losses and larger loss/frequency slopes obtained on nonloaded cables in the 12- to 18-kilofoot range or on loaded cables with longer end sections and bridged taps may not be suitable for some special service applications. It is common practice in many companies to load all loops longer than 12 kilofeet if these are likely to be used as PBX trunks. Even nonloaded loops shorter than 12 kilofeet may require special treatment, such as the use of E6 repeaters with 837C networks, to meet some special service objectives. Services with specified slope, delay, or noise requirements (such as DATA-PHONE® loops or the local plant portion of conditioned private lines) often require special design rules to supplement basic resistance design. For example, some form of slope equalizer such as the E7 repeater, may be required; frequently, excessively long bridged taps must be removed even though they are within the normal resistance design end section limits. Even loops which are already loaded under resistance design rules may require gain in some special service applications. Often, special service circuits must be extended on a four-wire basis to the customer premises to meet return loss requirements.

Special service requirements are generally accommodated on an individual case basis rather than as a modification of standard resistance design procedures. However, it is important that special service requirements in a given cable route be forecast as accurately as possible. In some cases, economies can be realized when the size, gauging, loading, and bridged tap content of certain cross sections are planned initially to meet special service requirements. Centrex locations also require special planning.

DATA-PHONE or Data Access Arrangement. As previously mentioned, special data loop design rules are used to supplement basic telephone loop design for DATA-PHONE or data access arrangement loops [3]. These loops are divided into three classifications depending on data transmission speed:

(1) Type I—For data transmission speeds below 300 bits per second.

Loss: Less than 9 dB at 1000 Hz.

Message circuit noise: No more than 20 dBrnc.

(2) Type II—For data transmission speeds from 300 bits per second to 2400 bits per second. The Type I limits apply in addition to the following:

Impulse noise: No more than 15 counts in 15 minutes at a threshold of 59 dBrnc on carrier facilities and 50 dBrnc on physical facilities, both referred to the local central office.

Slope: No more than 3 dB difference in loss between 1000 Hz and 2800 Hz.

Envelope delay distortion: No greater than 100 microseconds between 1000 Hz and 2400 Hz.

(3) Type III—For data transmission speeds above 2400 bits per second. Identical to Type II requirements except that additional tests are required if carrier channels are used.

As can be seen from Figure 5-4, the 1000-Hz loss requirement is generally not a problem if loop design rules are not violated. Moreover, the transmitting station power output is specified so that the signal is received at the originating end office at −12 dBm; therefore, only the loss between end offices and the loss of the *terminating* station loop are involved in determining received signal power.

Generally, the message circuit noise requirement is not critical if the loop plant is properly designed and administered. On the other hand, switching equipment is often the source of impulse noise; hence, proper design of loop facilities does not necessarily guarantee meeting the impulse noise objective. Either impulse noise mitigation techniques or remote exchange lines must be employed if these objectives are exceeded. Remote exchange lines are often prescribed when the normal serving central office is a panel or step-by-step office, since mitigation in these offices may be insufficient to meet objectives without excessive expenditures.

It is generally the envelope delay and slope objectives for Type II or III data loops which precipitate supplemental loop design procedures. Figures 5-5, 5-6, and 5-7 show distributions of 1000-Hz insertion loss, envelope delay, and slope parameters for the loop universe

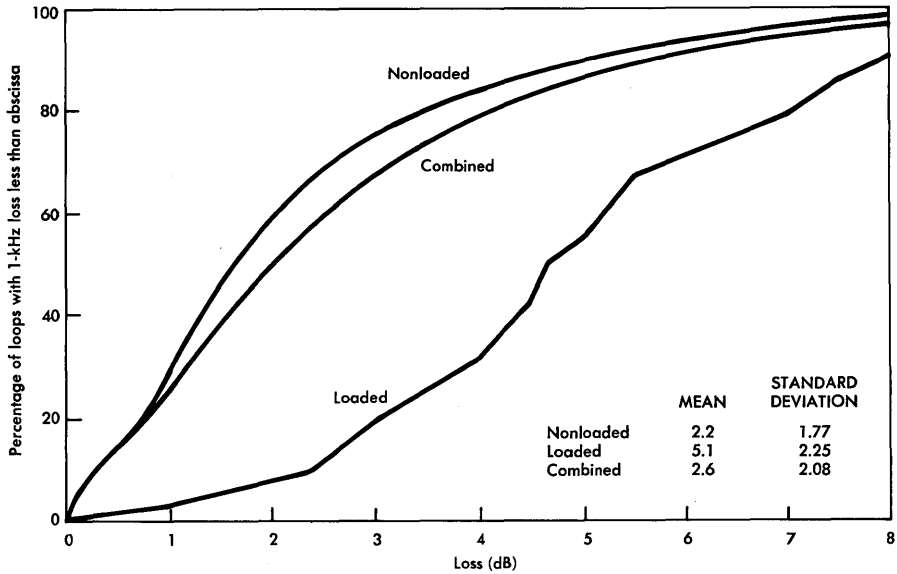

Figure 5-5. Insertion loss of loops to business customers.

which typically serves business customers.* Nonloaded loops do not pose envelope delay problems (see Figure 5-6) but over 15 percent of loaded loops require some form of delay equalization. On the other hand, Figure 5-7 shows that about 30 percent of nonloaded loops as well as slightly less than half of the loaded loops would require equalization or other treatment to meet the Type II or III slope objective.

PICTUREPHONE®. The large bandwidth ($\approx$ 1 MHz) and special control of certain impairments required for analog transmission of PICTUREPHONE signals in the local plant severely limit the proportion of loops placed under standard methods which are suitable for PICTUREPHONE service. These restrictions should be considered in the formation of any Outside Plant Plan for areas where PICTUREPHONE service is contemplated.

*This is a subuniverse of the general loop universe in Figure 5-4. Since business customers are predominantly (but not exclusively) located in urban or suburban areas, the means and standard deviations shown for the various transmission parameters are lower than for the general loop universe.

5-2 UNIGAUGE DESIGN

Unigauge design utilizes the basic concept that in certain situations it may be more economical to provide loop plant of uniformly fine gauge and to correct for transmission and signalling limitations by applying electronic circuitry which provides gain, equalization, and extended range for signalling and supervision [4, 5]. Generally, the greatest economies are realized if the electronic equipment can be engineered to provide a fixed amount of correction and can be switched into the transmission path of those loops requiring it rather than by dedicating apparatus to each individual loop and requiring a range of correction settings. These principles are also used in the unigauge plan.

Application

Unigauge is presently applicable to No. 5 crossbar and No. 2 ESS offices. The plan is most effective in urban-suburban areas 15 to 30 kilofeet from the central office, where there is significant demand for individual line residence service, and where there are few special

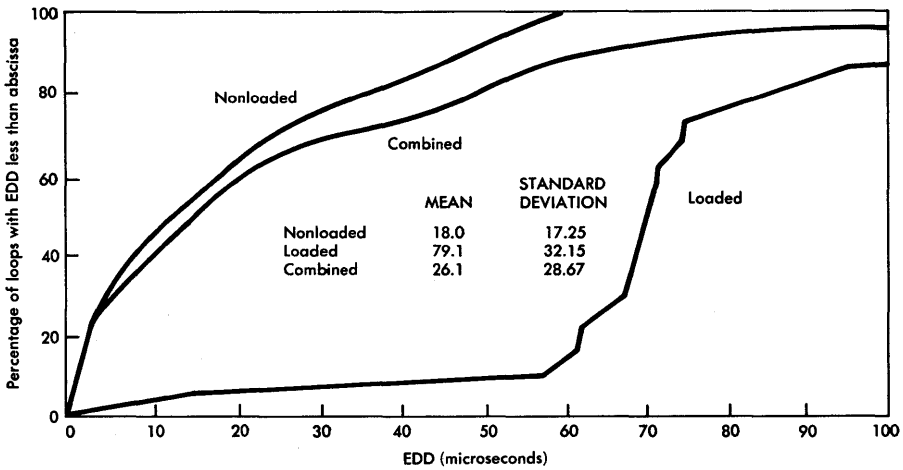

Note: Response in the 600- to 2750-Hz band when 1800 Hz is assumed to be the reference frequency.

Figure 5-6. Envelope delay distortion on loops to business customers.

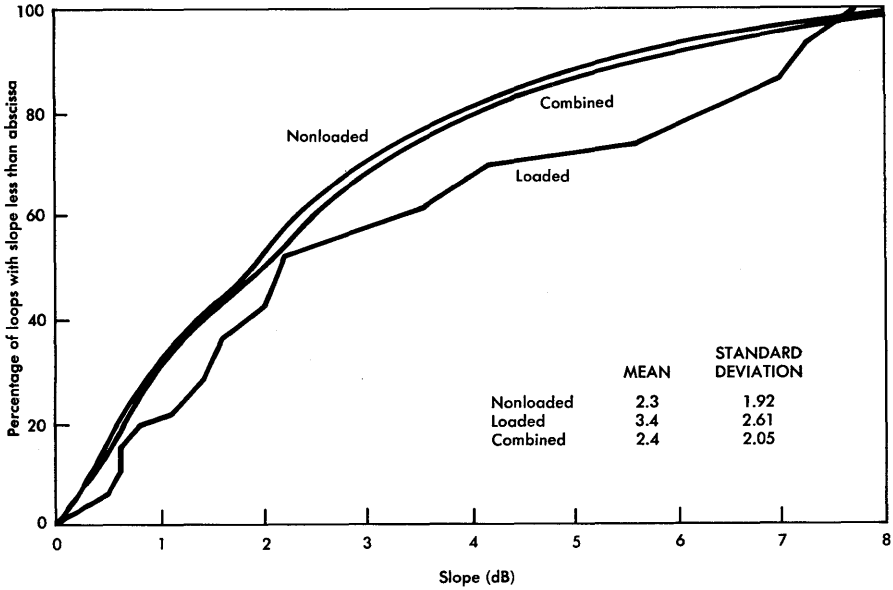

Note: Slope is defined as the difference in loss at 600 and 2750 Hz.

Figure 5-7. Frequency response of loops to business customers.

service, coin, or multiparty customers served by loops over 15 kilofeet long. Special service requirements in this range do not preclude provision of unigauge-designed plant but such plant may require supplementary transmission and signalling equipment on a dedicated and prescribed basis. The added equipment may significantly reduce or completely nullify the economic advantages. Unigauge is intended primarily for new growth in permanently connected plant areas, since PCP interconnection points permit flexibility in using existing coarse-gauge copper economically and limit the number of line and station transfers which would otherwise involve central office rearrangements.

Coin lines cannot be served from No. 5 crossbar horizontal groups equipped for unigauge due to the inability of the unigauge range extender to pass coin collect and return signals. A coin line dial long line unit and E6 repeaters should be used where central office signalling ranges and transmission loss objectives are exceeded.

Design Ranges

There are four basic ranges associated with the unigauge concept, as shown in Figure 5-8. The first range, for loops less than 15 kilofeet, consists entirely of 26-gauge nonloaded cable. Such loops are connected at the central office in the same manner as resistance design loops and are administered on the same basis since the resistance of 15 kilofeet of 26-gauge cable is less than the resistance design limit of 1300 ohms.

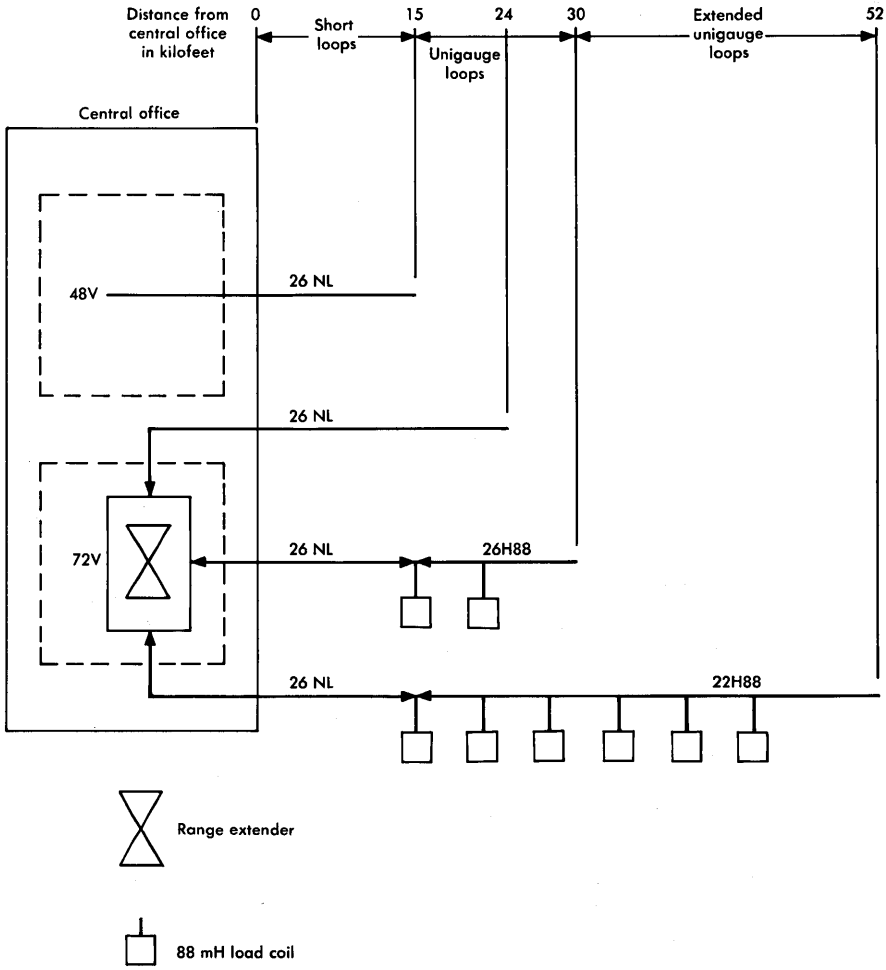

Figure 5-8. Unigauge loop plant layout.

For the remaining ranges, the unigauge concept extends the maximum conductor loop resistance range from 1300 ohms (resistance design limit) to 2500 ohms* by the use of unigauge range extension circuitry, which provides increased voltages for tripping the ringing signal, pulsing, and transmitter current. It also provides a shaped two-way gain characteristic having about 6 dB of gain at the middle of the voice-frequency band.

Unigauge Loops. Loops in the next two ranges are called unigauge loops, since they are in excess of 1300 ohms and require access to the unigauge range extension equipment. In No. 5 crossbar offices, unigauge loops connect to unigauge horizontal groups modified so that the primary stages of switching are equipped with more sensitive line relays in order to detect off-hook conditions on loops up to 2500 ohms with 48-volt battery. In No. 2 ESS, unigauge loops connect to a range-extended concentrator.

Unigauge range extenders are inserted in the links between the primary and secondary stages of the line link frame in a No. 5 crossbar office and allow concentrations of 4.9 or 5.9 loops to each range extender. In No. 2 ESS, range-extender repeaters are inserted in the "B" links. Theoretical concentration ratios are 4:1 or 2:1, although actual concentration ratios are usually lower due to the presence of trunks and service circuits as additional concentrator inputs.

A No. 5 crossbar office is modified to ensure that the range extender gain and 72-volt battery are applied to the unigauge loops as originating and terminating cross office paths are established and that the ringing signal is superimposed on 72 volts rather than on 48 volts. Figure 5-9 shows the cross-office transmission paths for originating and terminating calls in a No. 5 crossbar unigauge office. In No. 2 ESS offices, the capability for unigauge operation (other than the range-extender repeaters) is provided as part of the basic design and generic programs. Therefore, additional equipment and modification costs, which often negate the economic advantages of unigauge-designed plant in No. 5 crossbar offices, are not a consideration in No. 2 ESS. The only additional cost is for the number of range-extender repeaters required. Thus, it can be expected that the pre-

*Computed at 68°F for underground or buried plant and at 100°F for aerial plant.

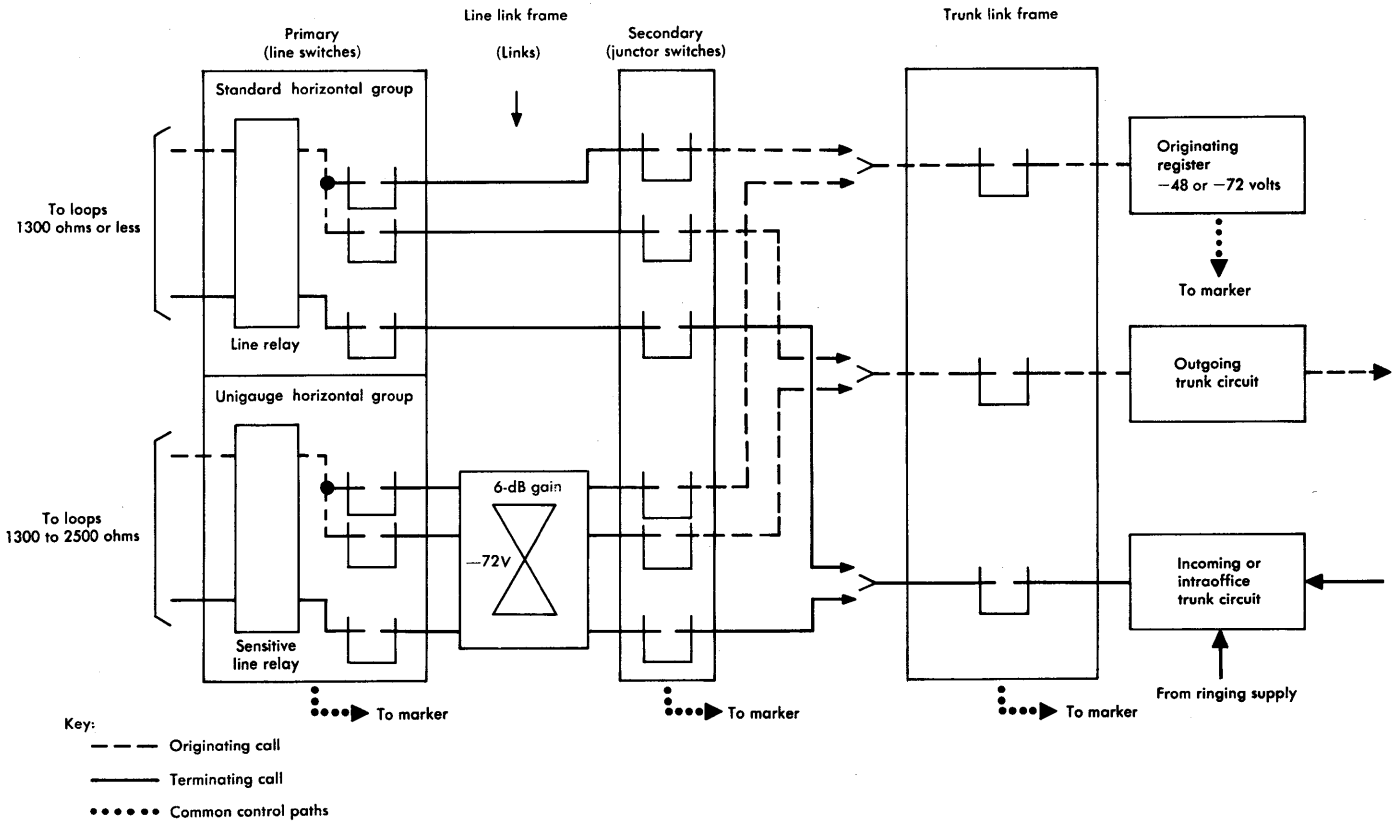

Figure 5-9. No. 5 crossbar, unigauge transmission paths.

dominant application of unigauge will be in exchanges served by No. 2 ESS.

The unigauge loop range between 15 and 24 kilofeet consists entirely of 26-gauge nonloaded cable. In this range, the unigauge repeater (part of the range extender) can provide sufficient gain and equalization so that satisfactory distributions of transmission losses and slopes result. Figure 5-10 shows the insertion gain characteristic of the 306A repeater unit used in No. 5 crossbar offices. The range-extender repeater for No. 2 ESS offices provides a similar gain shape but with insertion gains of 5.1 dB at 1 kHz and 9.5 dB at 3 kHz [5].

In the unigauge loop range between 24 and 30 kilofeet, 26-gauge cable is also used but the additional loss and slope cannot be completely compensated by the 306A repeater alone. Therefore, two 88-mh load points are established at 15 and 21 kilofeet from the office. The combined effect of this partial H88 loading and the 306A repeater produces the required distribution of losses and slopes for satisfactory transmission in this range. Loading is not applied within the first 15 kilofeet, since the stability of the unigauge repeater, specifically

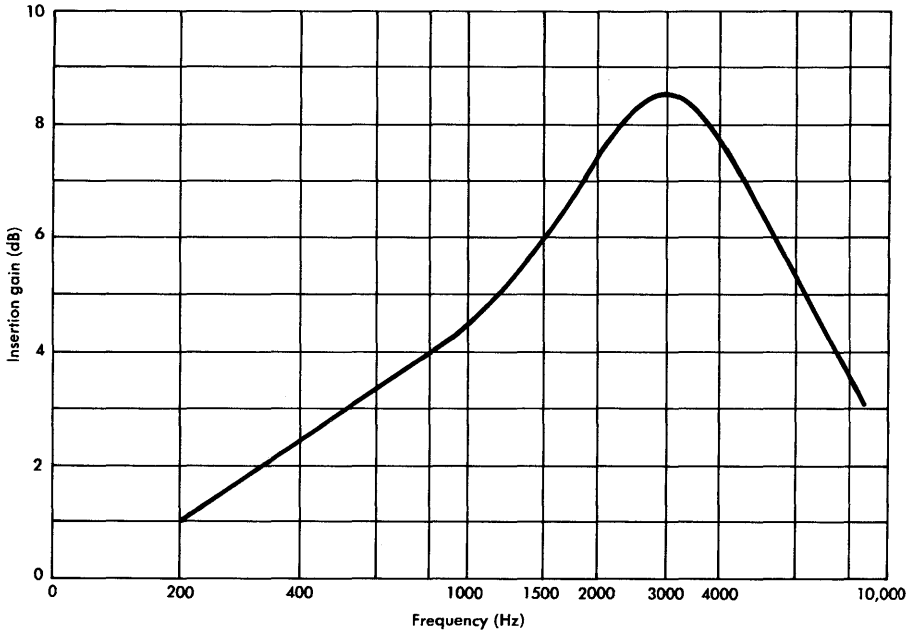

Figure 5-10. Unigauge repeater insertion gain, 306A repeater unit.

designed to match the impedance of 26-gauge nonloaded cable, would be adversely affected. The impedance-matching requirement also dictates that there be no bridged tap within 15 kilofeet of the office on unigauge loops. If unigauge design is applied to existing plant, there may be unigauge loops (that is, loops requiring the unigauge range extender) with sections of coarser gauge cable near the central office. In order to maintain repeater stability, it is mandatory to remove any loading coils in the first 15 kilofeet and to provide a 26-gauge buffer section adjacent to the central office. This 26-gauge section should be as long as possible but in any case no less than the following:

COARSEST GAUGE IN FIRST 15 KFT	MINIMUM LENGTH OF 26-GAUGE BUFFER, KFT
19	5.5
22	4.5
24	3.0

In addition, the minimum loop resistance of mixed gauge "unigauge" loops, including the buffer section, must be 1200 ohms.

Central office bridging of two-party unigauge loops requires the application of special unigauge relay bridging devices; the conventional 1574-type inductor bridge lifter has enough residual inductance, even when saturated, to affect adversely the impedance match to the unigauge repeater. Bridging with 1574-type inductors is permissible when the bridge is over 15 kilofeet from the office. In No. 5 crossbar offices, four- and eight-party lines are not suitable for unigauge treatment but must be individually treated with dial long line equipment and E6 repeaters; the customer drops are bridged, as are those in long route design. In No. 2 ESS offices, four- and eight-party lines may be bridged remotely and may receive unigauge treatment within the central office.

Extended Unigauge Loops. Thirty kilofeet is the longest allowable unigauge loop made up entirely of 26-gauge pairs. However, the unigauge central office equipment may accommodate loops as long as 52 kilofeet. Loops in this range are designed with the first 15 kilofeet as 26-gauge nonloaded cable and the remainder as 22H88 loaded cable. The first load point is established at 15 kilofeet, the intersection of the 26- and 22-gauge cables. The lower loss and slope of the 22H88 portion, when combined with the transmission correction provided by the unigauge

repeater, again ensure a satisfactory overall distribution of losses and slopes in this range. These loops are known as extended unigauge loops. The restrictions previously mentioned for unigauge loops, concerning the stability of the unigauge repeater, also apply to extended unigauge loops. All of the previously listed restrictions for resistance design (maximum bridged tap on nonloaded loops, load spacing deviations, and customer end sections plus bridged tap maxima) also apply to unigauge and extended unigauge loop plant.

Expected Range of Losses

The solid line in Figure 5-4 shows the theoretical insertion loss versus length for ideally designed unigauge loops (including the range extender where applicable) at 68 degrees with no bridged tap. Unigauge loop losses in the 15- to 20-kilofoot range are considerably less than losses resulting from resistance design, while unigauge losses in the 24- to 30-kilofoot and 40- to 52-kilofoot ranges are somewhat greater than their resistance design counterparts. However, if the percentage of main stations in each range is considered, it is found that unigauge provides lower losses for about 9.7 percent of loops, comparable losses for 86.8 percent, and higher losses for 2.7 percent in the overall 0- to 52-kilofoot range. Both unigauge and resistance design distributions are such that overall network transmission grade-of-service requirements are met. Similar analysis of frequency distortion (Figure 5-11) and loop current (Figure 5-12) for each design method shows some differences within the individual ranges; again, both distributions meet the overall voice objectives. However, unigauge loops in ranges beyond 18 kilofeet have generally higher slopes than those of resistance design. Thus, a higher proportion of such loops probably requires slope equalization if Type II or III conditioned data loops must be provided from a unigauge office. Unigauge design does give somewhat better overall echo return loss performance for loops over 15 kilofeet due to the 15 kilofeet of nonloaded 26-gauge cable next to the central office. Thus, unigauge offers transmission performance for message network service at least as good as that achievable under resistance design.

On the other hand, many special service circuit design requirements are more difficult to meet where the plant has been designed according to unigauge principles. A larger percentage of high resistance and high loss facilities are encountered. While the unigauge range extender can be adapted to some PBX trunk applications, it is generally

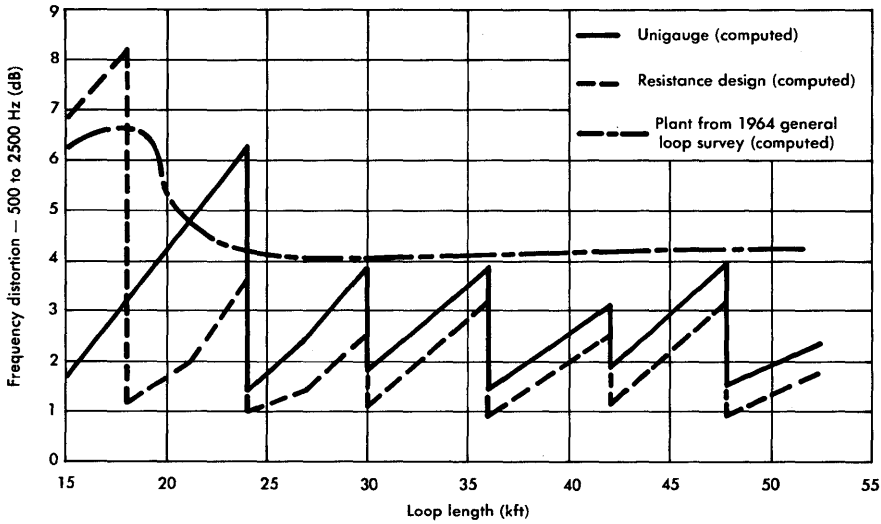

Figure 5-11. Frequency distortion comparison of unigauge and resistance designs.

necessary to make greater use of other electronic gain and range extension devices or to provide four-wire or equivalent four-wire facilities to meet objectives.

5-3 LONG ROUTE APPLICATIONS

Application of resistance design to cable plant serving scattered customers at great distances from the central office would at best involve relatively high per-station costs due to the large amount of coarse-gauge cable required. Moreover, few stations are so distant that resistance design cannot be used. Therefore, alternative design procedures have been developed. Long route design* and multichannel subscriber carrier arrangements offer increased economic flexibility and still provide a satisfactory distribution of transmission losses.

Long Route Design

Conceptually, several zones which correspond to ranges of resistance in excess of 1300 ohms are established by the long route design

*The term *long route* is used instead of *long loop* because the outside plant is engineered and constructed in terms of routes or sections of routes.

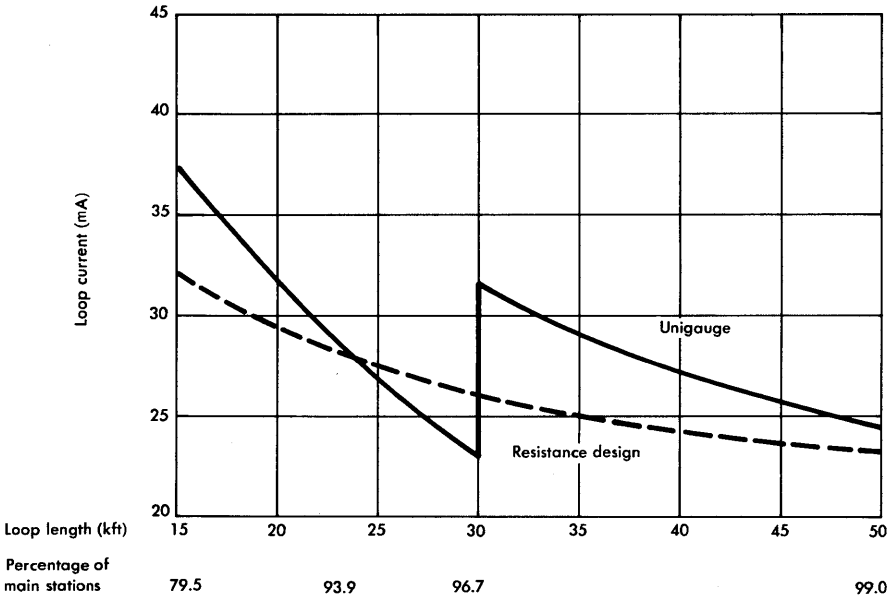

Figure 5-12. Loop current distribution.

procedure. It provides for a specific combination of electronic range extension and/or fixed gain devices to be applied to all loops falling within each range so that the maximum insertion loss in each range is limited to 8 dB (8.5 dB with office loss included). The overall distribution of losses obtained by the use of long route design thus provides a grade of service not significantly poorer than that generally received by all subscribers [6].

Basic Zones and Transmission Layout. Figure 5-13 illustrates a long route design work sheet. The vertical scale on the left is in terms of loop resistance and the scale on the right shows the upper and lower boundaries of each zone. The table at the lower right of the figure summarizes the prescribed signalling and /or transmission treatment for loops within each zone. Note that zone 16 requires no gain device but does require the 2A range extender.* Beyond zone 16, both range

*The range extender is required primarily so that the ringing signal can be tripped. Since some offices have a ringing trip range greater than 1300 ohms, some companies administer zone 16 on an individual office basis and provide the 2A range extender only as required.

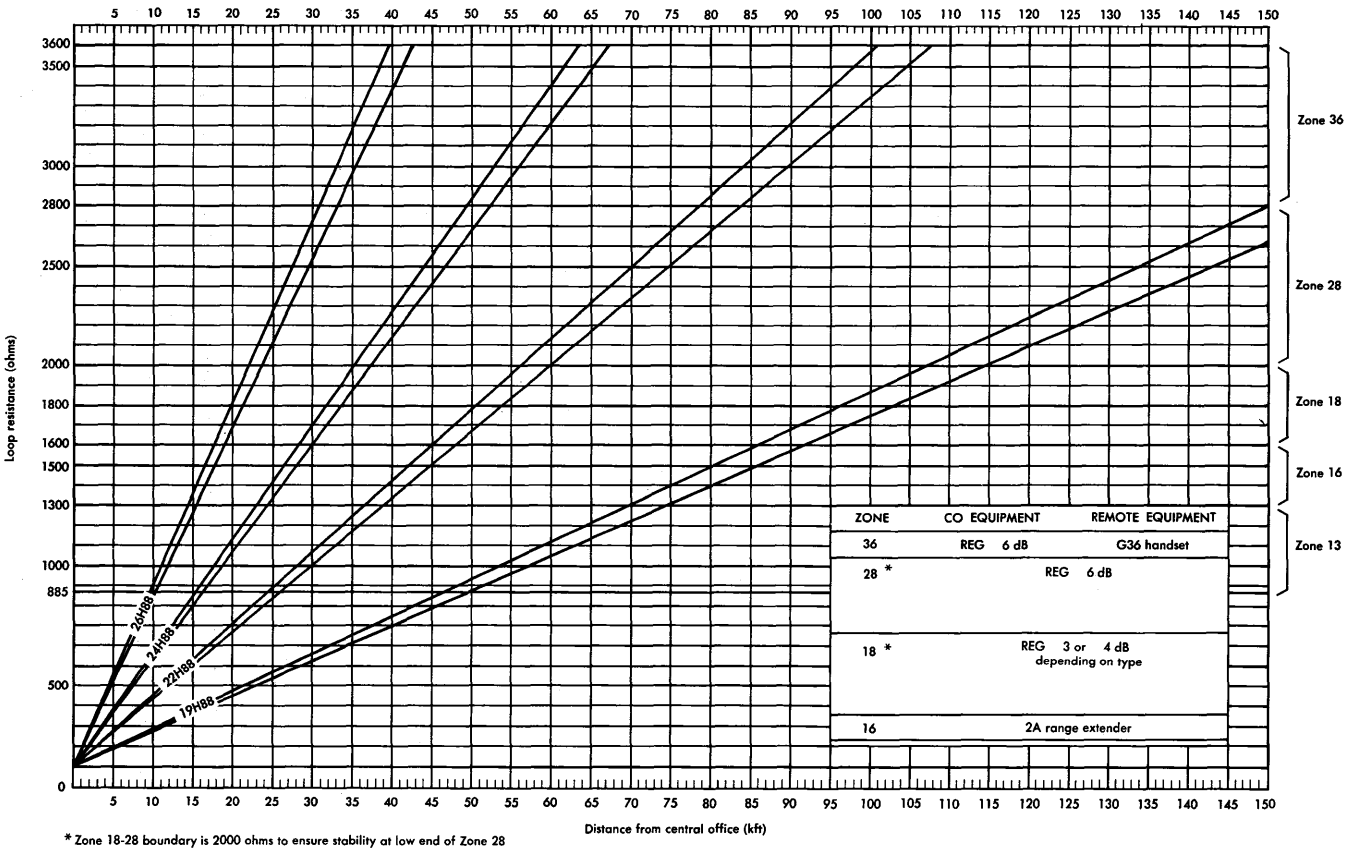

* Zone 18-28 boundary is 2000 ohms to ensure stability at low end of Zone 28

Figure 5-13. Typical long route design work sheet.

extension and gain equipment are required. The gain is applied uniformly to all loops within a given zone.

Gauging. In Figure 5-13, lines corresponding to the smoothed loop resistance versus length for each gauge of loaded high-capacitance cable are drawn for both 68°F (lower boundary) and 100°F (upper boundary). These lines are used to lay out prospective gauging plans and plot the corresponding zone boundaries. In contrast to resistance design, however, there are no set rules concerning selection of the gauge or gauges which would yield the most economical theoretical design. In theory, there are an infinite number of gauge combinations and, in reality, many of these alternatives are possible. Generally, forecasts of customer densities in each section of the route must first be obtained; then several of the most viable gauging alternatives are laid out on the work sheets upon which the zone boundaries are plotted. The resultant plans must then be made satisfactory from a transmission standpoint. Then the quantities and associated costs of transmission and range extension equipment required for each gauging alternative must be determined and added to the costs of the cable in each plan; the plans are then compared economically on the basis of present worth of expenditures. As previously mentioned, time-shared computer programs are available to aid in analysis for long route design alone or in combination with pair gain alternatives.

Gain Options. Originally, the E6 repeater was the prescribed gain device for use in long route design when transmission gain was required. However, since only three gain settings were ever required, the capabilities of the E6 were somewhat wasted since it provides a larger variety of gain settings. Moreover, detailed measurements were required during lineup of E6-equipped loops, adding to their cost. Now a range extender with voice-frequency gain (REG) is available to replace the E6 repeater and dial long line unit required for zones 18 and 28 [7]. The range extender operates in two basic modes. In the signalling mode, sensitive balanced-bridge circuits detect the off-hook condition and the presence of dial pulses. A shunt resistance is then placed across the line to increase the current that operates the central office equipment. In the transmission mode, a negative impedance repeater is switched into the circuit to provide for dial tone, voice transmission, and TOUCH-TONE® dialing. A line build-out network, also provided, is designed so that no detailed measurements are required during installation. An auxiliary power unit provides an additional —30 volts dc boost to the —48 volts provided by the normal

central office battery. The boost is applied to the loop through the REG output circuit to ensure adequate loop current.

In early designs of the REG, selector switches were used to provide either 4 or 6 dB of gain. Other switches were used to select the line build-out network required for the impedance match between the REG and the loop to be treated. The selection depended on cable pair gauge. In the latest design, the 5A REG, gain is automatically switched from 3 to 6 dB if the loop resistance exceeds 2000 ohms. This design of REG also contains a compromise design of build-out network that adequately matches any gauge combination of H88 loaded cable pair. With these features, no selector switches are required in the 5A REG.

Application of the REG thus provides a more economical design for zones 18 and 28. In zone 36 where 9 dB of gain is required, dial long line equipment and remote E6 repeaters were originally used to satisfy these requirements. These needs may now be fulfilled by using a REG at the central office and a G36 handset (with gain) at the station [8].

Other Transmission Considerations. In addition to the above considerations regarding transmission layout for each zone, other transmission requirements must be satisfied.

Load Spacing, End Sections, and Remote E6. Permissible load spacing deviations are the same as for resistance design. However, for cables with deviations which must be built out, theoretical return loss performance should be computed since capacitance build-out alone may not provide adequate return loss. A plan must also be provided in long route design for measurement of return loss during implementation. Customer end section plus bridged tap length should be limited to a range of 3 to 12 kilofeet.* For zone 36, the remote E6 repeater (when used) must be located in the range 1000 to 1250 ohms from the office and should not be more than ± 1500 feet from the midpoint of a load section.

Noise. Noise on all loops should meet a general objective of 20 dBrnc or less at the station end. However, due to the greater exposure of long loops and the increased possibility of multiparty

*Note that this is a more stringent requirement than the allowable 3- to 15-kilofoot range in resistance design.

services using grounded ringers, it may not be economically possible to bring each loop to within this limit. Therefore, although the objective remains 20 dBrnc, the maintenance limit for noise on long route design loops is 30 dBrnc. Loops having noise in excess of 30 dBrnc must be corrected by special treatment as required. This should result in most multiparty loops being under the 30 dBrnc limit, thus maintaining a satisfactory noise distribution in the long route universe.

Loss. Studies have shown that the best balance between plant cost and grade of service would be achieved by establishing the maximum insertion loss for long route designed loops at 8 dB (excluding central office loss) [6]. Sample routes typical of those expected under long route design were sectionalized and designed to meet maximum 1-kHz insertion loss objectives of 4, 6, 8, 10, and 12 dB, respectively. The resulting transmission loss distributions were determined; they include correction for 500-type station set efficiencies with variations in loop current. With the efficiency correction, the long loop transmitting direction produced a significantly higher mean effective loss and standard deviation than did the receiving direction; when combined in an overall connection model with distributions for the inter-

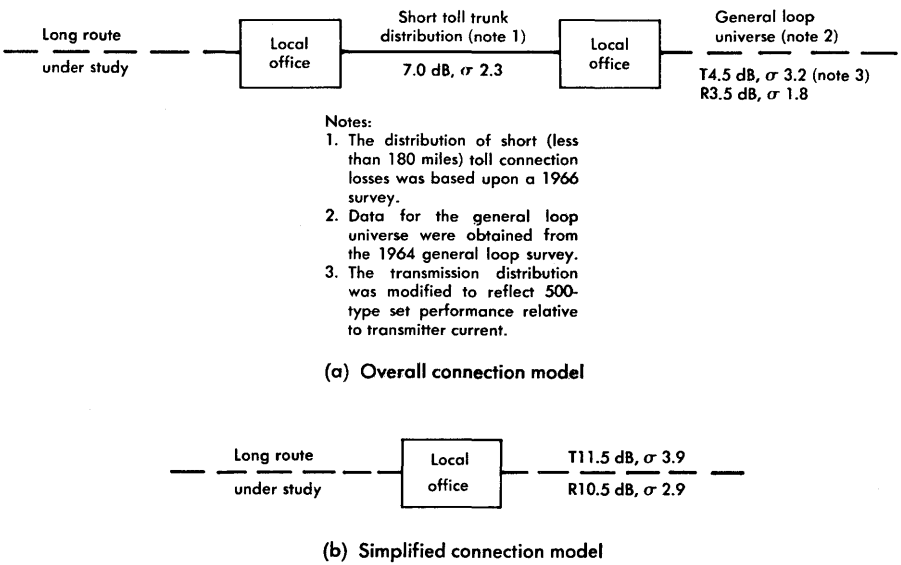

Figure 5-14. Connection models.

office trunk network and the general loop universe, the transmitting direction was still found to be the more critical [9]. Figure 5-14 shows models for the long loop transmitting configuration. A noise of 27.3 dBrnc (combining an assumed long loop noise distribution having a mean of 25 dBrnc with a 23.0 dBrnc empirical noise floor) was used for the noise distribution of long loop plant in the study. Costs of loop plant and associated range extension and gain equipment required to meet each of the insertion loss objectives were tabulated and analyzed on a PWAC basis. Figure 5-15 shows a comparison of the percent change in poor-or-worse grade of service for customers on the long route for each insertion loss objective with the percent change in PWAC.

Figure 5-15 shows that the relationship between cost and grade of service is nearly linear as the insertion loss objective is reduced from

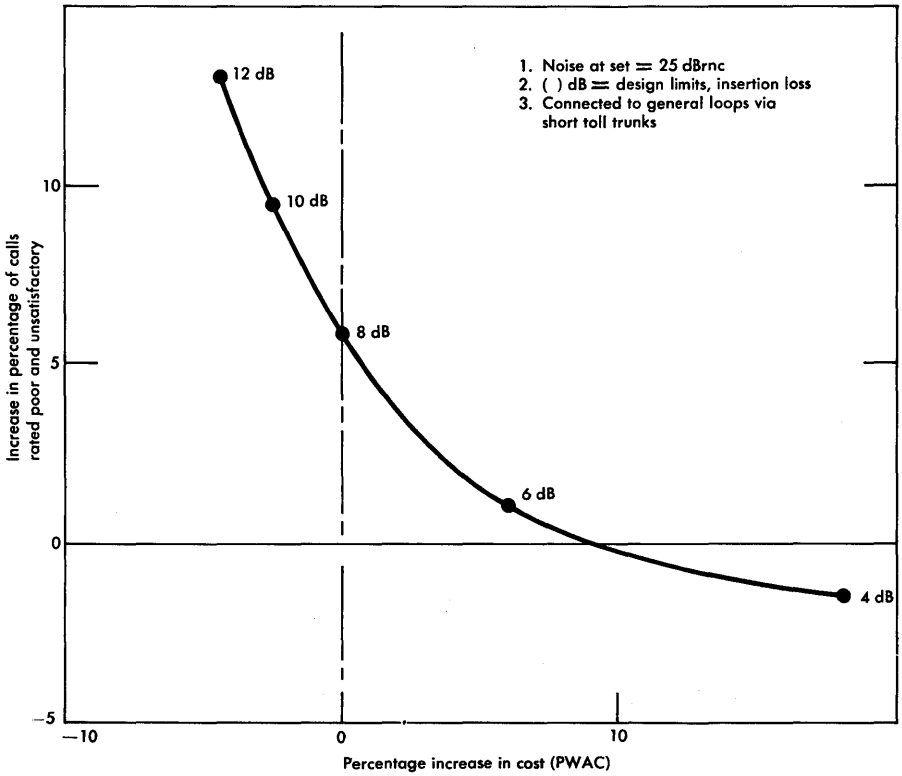

Figure 5-15. Rating of calls versus costs for various design limits.

12 to 8 dB. With a further reduction in the objective, the figure shows that the cost increases at a higher rate than the grade-of-service improvement rate. Thus, the 8-dB objective appears to be an appropriate compromise between cost and grade of service.

Another factor supporting the 8-dB objective for long routes is that it is compatible with the 8-dB maximum insertion loss objectives for resistance design loops; hence, it would not appear reasonable to make the long route maximum objective more stringent, although a higher proportion of long routes may be at or near the limiting loss. The 5 percent impairments (Figure 5-15) in poor-or-worse grade of service for long routes compared with the general loop universe appears consistent with the economic factors governing long routes, especially since long routes are a relatively small portion of the general loop universe.

Digital Loop Carrier Systems

An alternative to providing long route loops by paired-wire voice-frequency facilities is to use a digital loop carrier facility such as the SLC-40 System. This system uses T1-type digital line equipment with specially designed terminals. It can serve up to 40 loops over a single repeatered line which requires two pairs, one for each direction of transmission. Such a system appears to be most economical on long routes when relatively high subscriber line growth is forecast for the study period and when such routes would require considerable relief in the feeder portions. A computer program is available to analyze the present worth of annual costs for various combinations of digital or analog loop carrier systems and long route designed loops [10].

In addition to being more economical in certain situations, digital loop carrier systems can provide improved transmission loss distributions. The 1-kHz insertion loss of the SLC-40 System is normally only 2.0 dB between the central office and remote terminals regardless of the length of the digital facility. Additional losses are incurred in the distribution cables between the remote terminals and the station sets. The low insertion loss of the digital portion of such loops allows up to 5.0 dB additional loss in the distribution cables. Careful selection of remote terminal locations results in a satisfactory loop loss distribution on such long routes. In certain circumstances, it is possible to reduce the system insertion loss to 0 dB and thereby to extend

further the range of the connected plant. Idle noise on the digital portion of the loop is less than 20 dBrnc so that loop noise objectives are met in most systems without special treatment. Quantization noise is low and found to be satisfactory over the entire normal dynamic speech input range.

Multichannel Analog Subscriber Carrier Systems

Several 4- to 8-channel, distributed-terminal subscriber carrier systems are presently available and may be economical for some long route configurations. Surveys indicate that many subscriber carrier systems perform satisfactorily, although only one of them, the KS-20988 S6A system, is presently rated standard for Bell System use.*

There are two basic transmission design limitations on the length of these systems:

(1) Remote powering range (limit of 2400 ohms for the KS-20988).

(2) Insertion loss limit between repeaters and maximum number of repeater sections allowed. The KS-20988 limit is four repeater sections in tandem (three line repeaters each with a maximum gain of 35 dB at 112 kHz) for a total maximum insertion loss of 140 dB at 112 kHz.

The limitation resulting in the shortest design length for a particular cable makeup is controlling. For routes under study, when far point length exceeds one or both of these limitations, the KS-20988 system can be used to serve stations out to the carrier system limit and conventional long route design can be utilized for the remaining stations.

Computer programs are available to assist in evaluating the cost alternatives between multichannel analog and digital carrier systems and standard long route designed loops [10]. However, certain manual screening processes have been documented and should be undertaken for each route during preliminary planning. These processes provide graphs and formulas to analyze proposed routes on the basis of cus-

*This system is manufactured outside the Bell System to Bell System specifications.

tomer density, growth rate, equivalent route length, and cable and carrier system costs so that only those routes where carrier systems are viable alternatives undergo the rather costly detailed analysis provided by the computer programs.

Another planned use of multichannel subscriber carrier systems is to provide temporary service to customers in both the long route and resistance design areas in order to defer cable relief to an economically more suitable time. There are also several single-channel analog subscriber carrier systems available should temporary relief be required to serve only a few stations. Customers requesting a second line can often be served economically by the use of single-channel systems.

Multichannel subscriber carrier systems should not be indiscriminantly used to serve large numbers of customers in a given wire-center area. These systems provide loop insertion losses of about 6 dB for all derived channels. While 6 dB is less than the limit, a heavy concentration of such loops could bias upward the mean loop insertion loss to the point that overall grade of service in that wire center could be degraded.

5-4 CENTREX STATION LINE DESIGN

Since centrex customers are generally large toll service users and often require special features such as conferencing and add-on, the transmission objectives for centrex station lines are more stringent than those for standard loops.

For centrex-CO station lines served by consoles, or for those lines which are not involved in attendant-connected calls requiring multiple loops through a manual switchboard, the supervisory limit remains at 1300 ohms, the resistance design limit. Centrex station lines must meet a maximum expected measured loss objective of 5.5 dB, including the assumed 0.5 dB test access loss to the local test signal supply. Hence, the 1-kHz insertion loss of the loop facility should not exceed 5 dB. It can be seen in Figure 5-4 that resistance design loops over 11 kilofeet long may require some additional transmission treatment, such as loading or gain, to meet this objective when used as centrex station lines.

REFERENCES

1. Gresh, P. A. "Physical and Transmission Characteristics of Customer Loop Plant," *Bell System Tech. J.*, Vol. 48 (Dec. 1969), pp. 3337-3385.
2. Manhire, L. M. "Physical and Transmission Characteristics of Customer Loop Plant," *Bell System Tech. J.*, Vol. 57 (To be published Jan. 1978).
3. Bell System Technical Reference PUB 41005, *Data Communications Using the Switched Telecommunications Network* (American Telephone and Telegraph Company, Revised May, 1971).
4. Gresh, P. A., L. Howson, A. F. Lowe, and A. Zarouni. "A Unigauge Concept for Telephone Customer Loop Plant," *Proceedings of the National Electronics Conference*, Vol. 23 (1967), pp. 618-623.
5. Beuscher, H. J. and C. W. Deisch. "No. 2 ESS Unigauge Range Extension," *IEEE Transactions on Communications*, Vol. 21 (Apr. 1973), pp. 271-277.
6. Howe, C. D. "Transmission Design, Long Subscriber Routes," *IEEE International Conference on Communications*, Cat. No. 71C28-COM (June 1971), pp. 30-7 to 30-11.
7. Burgiel, J. C. and J. L. Henry. "REG Circuits Extend Central Office Service Areas," *Bell Laboratories Record*, Vol. 50 (Sept. 1972), pp. 243-247.
8. Hawley, G. T. and R. A. Radosevich. "The G36 Handset: Good News for Serving Far-out Customers," *Bell Laboratories Record*, Vol. 53 (July-Aug. 1975), pp. 289-294.
9. DiBiaso, L. S. "Subscriber Line Impact on Transmission Performance — A Principle of Assymetry," *IEEE National Telecommunications Conference Record*, (1976), pp. 23.6-1 to 23.6-3.
10. Abrams, B. S. and R. B. Hirsch. "Computer Aids for Rural Route Planning," *Bell Laboratories Record*, Vol. 52 (Sept. 1974), pp. 258-264.

Telecommunications Transmission Engineering

Section 3

Trunks

Many types of trunks are needed to provide transmission paths between switching machines. The functional and transmission characteristics of these trunks are determined largely by the network relationships that have been established in order to provide the wide range of switched services found in a modern telecommunication system. This section is devoted to discussions of the many trunk types, to the relation of these trunks types to the problems of traffic engineering, and to trunk design and operation.

The preparation of this second edition of Volume 3 coincides in time with a period of rapid transition in respect to trunk terminology, network configuration, trunk applications, and trunk design methods. Although the material in Section 3 reflects some of this transition, the dynamic nature of the network makes it impossible to reflect many of the changes that are taking place.

Chapter 6 is devoted to defining the principal trunk categories presently in use, describing the terminology applied to these trunks for traffic and transmission purposes, and explaining the evolving standards for designating the trunks in a manner such that the designations may be used for manual or automatic design and record keeping.

The engineering of trunks and trunk groups to meet traffic and transmission requirements involves an interdisciplinary understanding of the two fields. Chapter 7 gives traffic engineering background in order to provide this understanding for those involved in transmission engineering. Traffic distribution and routing are related to the provision of trunk groups capable of efficiently carrying a variety of traffic loads under both normal and extreme conditions. Traffic administration and terminology are also discussed.

The switched message network is conveniently regarded as being composed of local and toll portions. Trunks must be provided for each portion of the network and to interconnect the two major portions. Chapter 8 is addressed to the problems of trunk design in the local portion of the network. Signalling and supervision are discussed as well as transmission designs that, while applied locally, contribute to the successful operation of the entire network.

Chapter 9 is concerned with similar problems relating to the toll portion of the network. Intertoll trunks provide transmission paths between toll switching machines and toll connecting trunks provide for the interconnection of the toll and local portions of the network. The designs of these two classes of trunks and the achievement of satisfactory echo performance in the network by the application of balance objectives to toll offices are discussed. The effect on toll trunk design of introducing digital toll switching machines in the network is also considered.

The design of the network, based on the via net loss plan, provides the means for achieving acceptable network transmission performance in respect to loss and echo on telephone connections. Echo performance is evaluated in terms of echo return losses which are controlled by impedance balance at critical points in the network. In Chapter 10, the theoretical bases for balance objectives are reviewed, the methods of making balance measurements are described, and the manner in which the results are analyzed are discussed in considerable detail.

In addition to trunks that must serve and interconnect the local and toll portions of the switched network, there are many miscellaneous trunks that must be used for network operation. These include trunks such as those serving consoles and switchboards, automatic accounting equipment, conference circuits, etc. Descriptions of many such trunks are given in Chapter 11 and their designs are also discussed.

Chapter 6

Trunk Types and Uses

In general, a trunk may be defined as the transmission facility and the associated equipment used to establish a connection between switching entities. Trunks may be intraswitching machine, intrabuilding (between separate switching entities, or central offices, in the same building), or interbuilding, depending on the hierarchies and locations of the switching machines and switchboards involved in the built-up connection.

Six major trunk transmission categories are defined on the basis of their hierarchical positions in the network: *direct, tandem, intertandem, toll connecting, intertoll,* and *secondary intertoll* trunks. Two remaining categories have the general headings *auxiliary services* and *miscellaneous* and include a variety of specialized trunks on which the requirements may differ from those of the first six.

While transmission categories are meaningful in respect to transmission engineering studies, trunks usually are not designated operationally in this manner. They may be designated by traffic routing class, traffic use, or by a variety of names which have evolved over the years and may differ considerably from company to company. More recently, a coded format of common language symbols has been used to designate, among other things, the traffic class and standard traffic use categories. The traffic use category may require additional code modifiers, often corresponding to the functional or popular name for a trunk, to define its use further.

Before transmission objectives can be specified for a particular trunk group and before the design layout can be established, the transmission category of the group must be identified from various operational designations.

6-1 TRANSMISSION DESIGN CATEGORIES

Some of the types of trunks used between various classes of offices in certain portions of the message network hierarchy are shown in Figure 6-1. The trunks are lettered for cross reference between the following definitions of the transmission design categories and subsequent discussions in this chapter.

The transmission design categories of trunks are defined as follows:

(1) *Direct trunks* are used to connect an end (or class 5) office directly to another end office with no intermediate switching point. Trunks A, B, and C of Figure 6-1 are examples of direct trunks. This definition does not limit the use of direct trunks to nontoll-type traffic. Provided that the originating end office is equipped with automatic number identification (ANI) and local automatic message accounting (LAMA), direct toll trunks, as shown by trunk B, may be established to any other end office (where traffic load warrants) either in the same or a different numbering plan area (NPA).

(2) *Tandem trunks* connect a local office with one of the types of tandem offices described in Chapter 2. Except in cases where metropolitan tandem and toll portions of the network are combined, the tandem trunk provides paths for nontoll, multitrunk connections within a local or metropolitan area. Trunks D, E, and F of Figure 6-1 are tandem trunks which interconnect the local office with the tandem office. Connection EF is an example of a 2-trunk connection using tandem trunks.

(3) *Intertandem trunks* (for example, trunk G of Figure 6-1) interconnect two tandem switching points on nontoll multitrunk connections. Connection DGF is a 3-trunk connection using two tandem trunks and an intertandem trunk. Present metropolitan network plans allow one additional intertandem trunk in some multitrunk connections, i.e., a maximum of two intertandem and two tandem trunks in an overall tandem connection.

(4) *Toll connecting trunks* (TCTs) are, in a sense, special kinds of tandem trunks in that they also provide paths for multitrunk connection between end offices. In this case, however, a toll connection is involved. A toll connecting trunk connects

an end office to a point of entry to or exit from the toll portion of the network for all toll connections except those provided by direct trunks. The point of entry or exit may be a toll switching machine or toll switchboard. Trunks H, I, J, K, L, M, and Z of Figure 6-1 are examples of toll connecting trunks. Although not shown in Figure 6-1, a toll connecting trunk may also interconnect an end office with a control switching point (CSP), i.e., a toll office higher in rank than class 4; however, this connection is provided only for access to the class 4 functions provided by the control switching point.

(5) *Intertoll trunks* are those links in an overall toll connection which extend between two toll switching systems. In the same sense that the toll connecting trunk is the toll equivalent of a tandem trunk, an intertoll trunk is analogous to an intertandem trunk. The definition encompasses trunks between all toll switching machines, including those in the same building. Also, trunks between toll switching machines and switchboards which are of different class rank are also considered for transmission design purposes to be intertoll trunks, regardless of whether they are collocated. In traffic use terminology, these are designated as secondary intertoll trunks. A manually operated toll switchboard is limited in its standard assistance connections to class 4 operation except for overseas service. Trunks N through V of Figure 6-1 are designed as intertoll trunks.

(6) *Secondary intertoll trunks* are used to interconnect an automatic toll switching machine and its manually operated assistance switchboard of *equal* class rank (normally both class 4 in standard arrangements other than for overseas service). The two are closely associated as a single unit and are located in the same building or in buildings close together. Trunks W, X, and Y of Figure 6-1, examples of secondary intertoll trunks, represent *extra links* in built-up operator-handled toll connections. The same connection on a DDD basis would not have these extra links.

Trunks that interconnect centrex switching machines with message network switching machines or attendant equipment, although considered special service trunks, have engineering criteria similar to

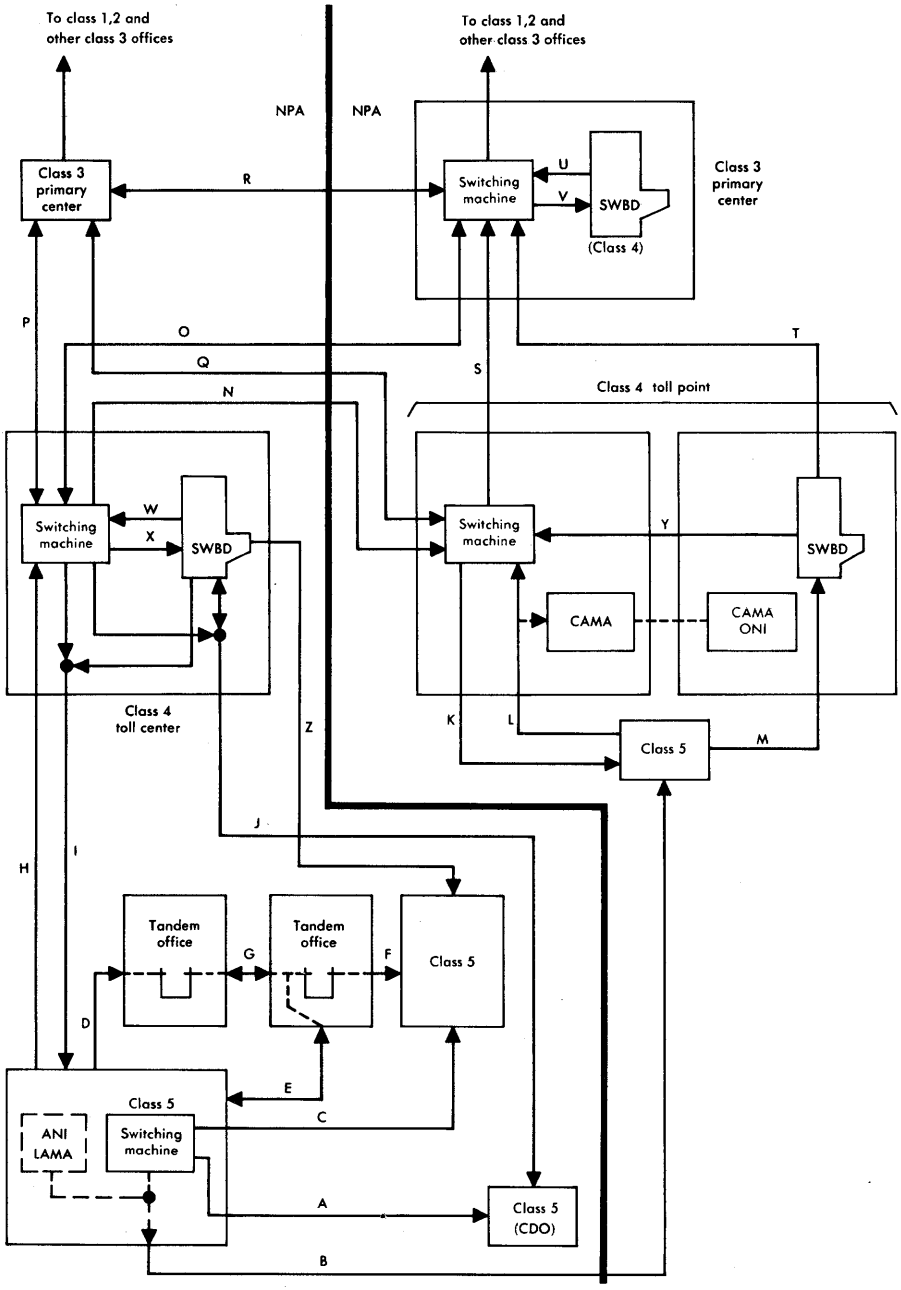

Figure 6-1. Network trunk categories.

those for message trunks. Therefore, they are discussed in conjunction with the message trunk common language format and with the message trunk office use categories.

6-2 OPERATIONAL CATEGORIES

While the transmission categories of trunks are of primary interest for design purposes, other categories are commonly used for traffic administration. Traffic-related designations are generally used for internal Bell System correspondence.

Traffic Class and Traffic Use

There are two major ways to categorize trunks operationally. The first, *traffic class,* relates to the manner and sequence by which the network switching entities gain access to trunk groups, as determined by the network routing rules. Standard traffic classes are summarized and defined in Figure 6-2. The second, *traffic use,* is based on the particular function(s) of the trunk within the network and is dependent on several factors: (1) the nature of the switching entities it interconnects and their respective classes in the hierarchy, (2) the direction in which calls are established (i.e., originating, completing, two-way, etc.), (3) the manner in which billing information is recorded (ANI, LAMA, CAMA*, etc.) and, in some cases, (4) the type of call and nature of the calling station. In many cases, the same trunk groups may serve more than one traffic use. Standard traffic uses are summarized and defined in Figure 6-3. Where appropriate, these definitions may include references to one or more of the lettered trunks in Figure 6-1.

Traffic use, not traffic class, generally determines the transmission design category of a trunk. When traffic use definitions are related to transmission design categories, it can be seen that the transmission design category is most dependent upon the nature of the switching entities connected by a trunk and their respective classes in the network hierarchy. Network transmission design must be based upon statistical analysis of the random manner in which calls may be routed in the network. Consequently, the transmission objectives for various categories of network trunks are based on their positions in built-up connections and on their resulting contributions to network transmission performance.

*Centralized automatic message accounting.

CODE	DESCRIPTION
	FINAL
AF	*Alternate route final:* Provided as the last resort path in the final route chain, this group carries direct and/or switched overflow from high usage trunk groups. It may also carry calls which have not been routed over a high usage group of any type and which instead are first routed over the final group.
IF	*Individual final:* A group that parallels the AF group and functions like a high usage group, it carries overflow traffic directly to the AF group and is provided for the service protection of specified items of first-routed traffic.
	NONALTERNATE ROUTE
DF	*Direct final:* Commonly referred to as a nonalternate route trunk group, this group does not receive overflow and is provided as the only route between two offices for the items of traffic it carries.
	FULL GROUP
FG	*Full group:* This group would be high usage in the basic routing pattern but for some reason (service advantage or equipment limitations) it is engineered for low incidence of blocking and is not provided with an alternate route.
	HIGH USAGE
PH	*Primary high usage:* A group provided to carry only first-routed or primary traffic between any two offices whenever the volume of traffic makes direct routing economical, it is designed to pass a predetermined amount of offered load overflow to an alternate route during the busy hour.
IH	*Intermediate high usage:* This group is provided to carry a combination of overflow traffic and first route traffic between any two offices whenever the combined volume of first-routed and overflow load makes direct routing economical. The group is designed to pass a predetermined amount of offered load overflow to an alternate route during the busy hour.
	OTHER
TR	*Trap:* Intertoll trap circuits are trunks added to a high-usage group in order to route a specified item of traffic on a final basis. The specified item of traffic has access to all other trunks in the high usage group and has sole access to the trap circuits. The specified item of traffic does not have an alternate route beyond the augmented high-usage groups. Trap circuits are connected at a control switching point.
MI	*Miscellaneous:* This group is provided for traffic administration or plant maintenance and administration, and for trunks that do not fall into one of the other categories.

Figure 6-2. Description of traffic class trunk group codes.

CODE	DESCRIPTION
AD	*Attendant:* This group interconnects a centrex switching machine and customer attendant equipment and is used to route assistance-type traffic to the customer attendant position.
AI	*Automatic Identified Outward Dialing:* This group connects a PBX to a switching machine to identify outward dialed calls by line number of originating station.
CA	*CAMA:* A CAMA group carries customer-dialed 7-digit or 10-digit toll calls to a toll switching machine with access to centralized automatic message accounting equipment where a connection is recorded and timed. Either CAMA operators or ANI may be used for number identification. Example — trunk L of Figure 6-1.
DD	*DDD Access:* This group carries customer-dialed 7-digit or 10-digit toll calls from end offices directly to toll switching machines (class 1-4) having local automatic message accounting equipment for recording and timing the call. This group may route to a class 4 office in the same or in a foreign NPA. Example— trunk H of Figure 6-1.
DI	*Direct-in-dial:* A group from a switching machine to a PBX; this group completes directly dialed inward traffic.
DO	*Direct-out-dial:* This group is from a PBX to a switching machine for direct station access to the message network.
IA	*Intraoffice:* This group is provided to handle calls between subscribers served by the same switching machine. No tandem traffic is routed over this group.
IE	*Interoffice:* This group is provided to handle local and/or multi-message unit calls between end offices in the same or different buildings. No tandem traffic is routed over this group. Examples — Trunks A and C of Figure 6-1.
IM	*Intermarker:* This group interconnects two No. 5 crossbar marker groups in the same building by intermarker group operation.
IT	*Intertoll:* These trunks interconnect switching machines of class 1, 2, 3, or 4 offices with or without switchboard arrangements at either end. Examples — trunks N through S of Figure 6-1.
JT	*Junctor:* The junctor is an intraoffice group arrangement in an end office for such purposes as providing coin or billing supervision.
LW	*Leave word:* These groups are provided to perform special operator functions such as universal, call back, conference, etc. Examples — trunks V and X of Figure 6-1.
MN	*Manual:* This group interconnects manual end offices (class 5) and toll switching machines or switchboards.
MT	*Intertandem:* This group interconnects switching machines having an office class (traffic switching function) of zero. Local tandem switching machines include those end offices performing both local and tandem functions. Example — trunk G of Figure 6-1.
(Cont)	

Figure 6-3. Description of traffic use trunk group codes.

CODE	DESCRIPTION
(Cont)	
OA	*Operator assistant (inward operator):* This is a group provided from a switching machine to a switchboard or desk to which distant operators have access for performing inward assistance functions. Examples — trunks V and X of Figure 6-1.
OJ	*Operator junctor:* This group, by which the operator gains access to an outgoing trunk of the crossbar office (toll only or a combination of toll and local), is provided from a switchboard to a No. 1 or No. 5 crossbar unit in the same building. Example — trunk W of Figure 6-1 when the switching machine is a crossbar unit.
OO	*Operator offices:* This two-way group between community dial tributary offices and their operator offices is used to complete toll calls. (Outward calls are operator-handled; inward calls can be machine-and/or operator-handled.) Example — trunk J of Figure 6-1.
RC	*Recording completing:* An RC group connects end offices to an outward toll and/or assistance position; it requires an operator to complete calls. Example — trunk M of Figure 6-1.
SP	*Traffic service position:* This group carries customer-dialed traffic from an end office to a toll switching machine and is equipped for bridging an operator to aid in call completion.
TC	*Toll completing:* These trunks, carrying final route traffic, connect a switching machine of class 4 or higher rank to a class 5 office. Example — trunk K of Figure 6-1.
TE	*End-to-end toll:* This group handles toll calls between class 5 offices and may carry some local, multimessage unit, or extended area traffic. Example — trunk B of Figure 6-1.
TG	*Tandem completing:* This is a one-way or two-way group from a local tandem switching machine to an end office. Local tandem switching machines include those end offices used as tandem equipment arrangements. Example — trunk F of Figure 6-1.
TM	*Toll completing and toll switching combined:* This group combines the toll completing and toll switching functions; it is a group from a combination of a switching machine (class 4 or higher) and a switchboard to a dial class 5 office. Example — trunk I of Figure 6-1.
TO	*Tandem originating:* This is a group from an end office to a local tandem switching machine. Local tandem switching machines include those end offices used as tandem arrangements. Special purpose intermarker groups are not considered part of tandem arrangements. Example — trunks D and E of Figure 6-1.
TS	*Toll switching:* This group is from a switchboard to an end office and is used to complete delayed outward calls, inward calls, and assistance traffic. Example — trunk Z of Figure 6-1.
TT	*Toll tandem:* This group is provided from a toll switchboard to a toll switching machine for operator access to the toll portion of the network. Examples — trunks T, U, W, and Y of Figure 6-1.

Figure 6-3. Description of traffic use trunk group codes.

Figure 6-4 shows the general correlation between the traffic class, traffic use, and transmission design categories of trunk groups. The traffic classifications and uses are specified by two-letter abbreviations in this figure. These abbreviations are currently used in the common language coding scheme employed by the Bell System. Figures 6-2 and 6-3 include the common language abbreviations for the traffic classifications and traffic uses, respectively. Trunks with more than one traffic use may appear to fall into more than one transmision design category. In these cases, the transmission design category chosen must be that having the most stringent transmission objective, regardless of whether the traffic use corresponding to that transmission category is primary or secondary. For instance, it is quite common in combined local and toll metropolitan networks for a trunk to be used primarily as a tandem completing trunk and also to function as a toll completing trunk; it must therefore be designed to toll connecting trunk objectives.

Functional or Popular Names

The trunk names associated with traffic use designations are essentially functional names and are recommended for use in the Bell System so that standard abbreviations may be applied to common language. However, because a trunk group may have more than one use, the functional names may include more than one such designation. Also, additional descriptive terms are often added to a basic traffic use name to describe further the particular type of call being served. Such terms might designate the type of originating station (coin, noncoin, etc.), the type of rate (message, flat, business, metropolitan, etc.), or the class of call (zero, one-plus, etc.). Most companies attempt to standardize additional common language abbreviations for these functions. They generally publish supplements to the standard internal documents listing these common language abbreviations and tabulating and defining functional names for the trunks.

There are also many popular names for trunks which evolved prior to the current efforts at standardization. While often functionally descriptive, these names may not correspond directly to current traffic usage terminology. An example is the "dial system A" (DSA) trunk, defined as a trunk which provides access to local operator assistance when a subscriber dials 0. The most common traffic usage terminology for this type of trunk is "recording completing" (RC), as defined in Figure 6-3. Note here, however, that an RC trunk may

TRAFFIC USE CATEGORY	CODE	TRAFFIC CLASS								TRANSMISSION DESIGN CATEGORY
		AF	IF	DF	FG	PH	IH	TR	MI	
INTERTOLL										INTERTOLL
Primary	IT	X	X	X	X	X	X	X		
Secondary	LW	X		X	X	X				INTERTOLL OR SECONDARY INTERTOLL — Depends on rank of switching machine and location of switchboard.
	OA	X		X	X	X				
	OJ	X		X	X	X				
	TT	X		X	X	X				
TOLL CONNECTING	CA	X		X	X	X				TOLL CONNECTING
	DD	X	X	X	X	X	X			
Toll access	MN			X						
	RC	X		X	X	X	X			
	SP	X		X	X	X	X			
Toll completing	OO			X						
	TC	X		X	X	X	X			
	TM	X		X	X	X	X			
	TS	X		X	X	X				
END-TO-END TOLL	TE			X	X	X				DIRECT
INTERLOCAL										
Direct	IA	X		X	X	X	X			
	IE	X		X	X	X	X			
	IM	X		X						
	JT	X		X	X	X				
Tandem	MT	X	X	X	X	X	X			INTERTANDEM
	TG	X		X	X	X	X			TANDEM
	TO	X	X	X	X	X	X			
AUXILIARY SERVICES	DA	X		X	X	X				Varies in accordance with usage.
	IN	X		X	X	X				
	IR	X		X	X	X				
	OF	X		X	X	X				
	RR	X		X	X	X				
	RS	X		X	X	X				
	TI	X		X	X	X				
	WE	X		X	X	X				
MISC	*	X	X	X	X	X			X	
CENTREX AND PBX	AD			X						SPECIAL SERVICE DESIGN
	AI			X						
	DI	X		X	X	X	X			
	DO	X		X	X	X	X			

*See Figure 6-8.

Figure 6-4. Correlation of transmission design categories with traffic class and traffic use.

be used to provide DSA toll operator access or may provide both functions if the operator positions are combined. Another popular name for an RC trunk is "combined line and recording" (CLR), a term still commonly used. Also, DSA and toll access functions can be provided by another traffic use type of trunk, the operator office (OO) trunk if the originating office is a community dial office (CDO). Trunk J of Figure 6-1 is an OO trunk. Since the introduction of TSPS No. 1, the DSA function is accomplished by provision of the capability for bridging the TSPS operator to a toll completing trunk at or near the originating toll office.

Thus, trunks designated by popular names may or may not be translatable to a single traffic use category, and vice versa. Companies which have published common language code supplements have generally attempted to standardize current traffic use terminology and to include the former popular names of these trunks for correlation with the current traffic use names. Otherwise, it may be difficult to determine the transmission category of a trunk from its popular name unless its position and function in the hierarchy can be determined from other data.

6-3 COMMON LANGUAGE TRUNK DESIGNATIONS

The purpose of the Bell System common language circuit identification plan is to provide coded designations for trunks or trunk groups [1]. The designations must be acceptable for mechanized (computer) procedures, yet easily read and interpreted by personnel who require trunk information. The standard trunk designation consists of 41 characters in the format shown in Figure 6-5. The portion most relevant to this discussion is represented by character positions 5 through 17.*

There are four subheadings for trunk types in Figure 6-5. The first, *Traffic Class,* positions 5 and 6, is one of the codes from Figure 6-2. The second, *Office Class,* positions 7 and 8, is composed of symbols representing the classes of switching machines in offices A and Z, respectively. The digit 0 designates a local tandem function and the letter C indicates a concentrator function. When the trunk

*Common language codes, designations, and applications to business information systems (BIS) are covered by a number of internal Bell System documents which are subject to considerable change as BIS evolves.

CHARACTER	TRUNK NUMBER	TRUNK TYPE				LOCATION IDENTIFICATION (OFFICE A)	TYPE AND DIRECTION OF PULSING	LOCATION IDENTIFICATION (OFFICE Z)
		TRAFFIC CLASS	OFFICE CLASS	TRAFFIC USE	TRUNK TYPE MODIFIER			
POSITIONS	1 — 4	5 — 6	7 — 8	9 — 10	11 — 17	18 — 28	29 — 30	31 — 41
SETS	NNNN	AA	XX	AA	XXXXXXX	AAAAAAXXXXX	XX	AAAAAAXXXXX

Legend: A = alphabetic symbol
N = numeric symbol
X = alphabetic or numeric symbol; in some positions, a hyphen

Figure 6-5. Format for circuit identification of message trunk common language designation codes.

group serves more than one class of traffic or switching machine, the class of highest rank is used. When a terminal office is represented by a nonswitching entity such as an information desk, repair desk, etc., a hyphen is entered in character position 7 and/or 8, as appropriate.

The third subheading, *Traffic Use,* positions 9 and 10, is normally one of the codes from Figure 6-3 or one of the auxiliary service or miscellaneous trunk codes listed in Figures 6-7 and 6-8. If the trunk has more than one use, the first groups of character positions in the fourth subheading, *Trunk Type Modifier,* specify these additional uses from Figure 6-3 as well as the supplementary information described in the next paragraph. For two-way combination trunks (e.g., CAMA in one direction and toll completing in the opposite direction), positions 9 and 10 contain the code for the A to Z direction; positions 11 and 12, the code for the Z to A direction. The *Trunk Type Modifier* subheading, positions 11 to 17, is normally reserved to specify supplementary information, if required, to provide positive identification for various trunk functions according to sets of locally standard abbreviations and accompanying definitions.

A typical trunk code, taken from a local company reference, is illustrated in Figure 6-6, which shows data extracted from Figure 6-5. Figure 6-6 shows how the common language coding can be used to identify transmission design categories.

POSITION	5	6	7	8	9	10	11	12	13	14	15	16	17
CODE	D	F	5	4	0	0	T	C	N	C	N	—	—

Figure 6-6. Common language trunk code.

The traffic class, determined from positions 5 and 6, is coded DF and is shown in Figure 6-2 to be a direct final trunk. The traffic use name of the trunk specified by this code is listed in the reference as "Operator Office Toll Completing Noncoin." Its former popular name is listed as "operator office noncoin and toll switch and intertoll dial." The definition given in the local company reference is a two-way trunk between a class 5 office and an operator office where the inward traffic is via toll switching equipment. The transmission design category, toll connecting trunk, is determined by:

(1) observing the office class numbers in positions 7 and 8,

(2) cross referencing the traffic use designations and trunk-type

modifiers in positions 9 through 17 with the transmission design categories given in Figure 6-4, and

(3) reading the definition in the local company reference.

One other segment of the common language code of particular interest in transmission engineering is that under the heading "Type and Direction of Pulsing," positions 29 and 30. The type of pulsing of signalling (other than supervisory signals) is designated according to the codes in Figure 6-7. Position 29 indicates the type of pulsing or signalling from office A to Z and position 30, from Z to A. For one-way trunks, a hyphen is entered in the nonpulsing direction. This information is useful during the design layout of the trunk to determine the proper trunk circuits and options to be specified.

6-4 AUXILIARY SERVICES AND MISCELLANEOUS TRUNKS

The transmission design category for trunks associated with operator services must be carefully chosen so that these trunks do not significantly increase loss and balance impairments in a built-up connection compared to the same connection made on a DDD basis. Correlations of traffic uses with transmission categories, shown in Figure 6-4, apply generally to trunks associated with local and toll switchboards.

Trunks of the types grouped as auxiliary services in Figure 6-8 (operator services such as intercept, directory assistance, etc.) or trunks terminating in test desks or announcement systems may not necessarily fall into the first six basic transmission categories.

Trunks provided for traffic administration, plant maintenance and administration, or miscellaneous functions may not fit the categories and are grouped under a *miscellaneous* heading. Codes and names for the most common miscellaneous trunks are given in Figure 6-9.

CODE	DESCRIPTION
A	*Automatic:* The seizure of a trunk at a dial switching center automatically lights a lamp at the distant switchboard as a connect signal; release of the trunk gives the disconnect signal.
C	*Common channel interoffice signalling (CCIS):* This is a signalling arrangement between processor-equipped switching systems in which the signalling paths are separated from the message transmission paths.
(Cont)	

Figure 6-7. Description of pulsing and signalling codes.

CODE	DESCRIPTION
(Cont)	
D	*Dial:* This is a pulsing arrangement in which the digits are transmitted to the called end. The number of pulses, one to ten, corresponds to the digits one to zero.
F	*Frequency shift:* In this pulsing arrangement, the identity of each digit is determined by changing the frequency of the transmitted tone. The frequency of the transmitted tone is changed by the on-hook or off-hook conditions of the loop or E and M leads at the transmitting end.
J	*TOUCH-TONE (12-button):* This is a pulsing arrangement in which the identity of each digit plus two additional symbols is represented by combinations of tones originating in a 12-button TOUCH-TONE unit.
K	*TOUCH-TONE (16-button):* This is a pulsing ararngement in which the identity of each digit plus several special code symbols is represented by combinations of tones originating in a 16-button TOUCH-TONE unit.
M	*Multifrequency:* This is a pulsing arrangement where the identity of digits is determined by two of five frequencies. Combinations using a sixth frequency provide priming and start signals.
P	*Panel call indicator (PCI):* This is a dc pulsing arrangement in which each digit is transmitted as a series of four marginal and polarized impulses. (Originally developed and used in connection with panel call indicator.)
R	*Ringdown:* A ringing voltage is applied to a connection automatically or as a result of key operation by an operator for the purpose of transmitting supervisory signals between two points in a connection.
S	*Straightforward:* Insertion of a cord in a trunk jack automatically lights a lamp at the distant switchboard as a connect signal; removal of the cord gives the disconnect signal. (Usually an audible "zip-zip" tone is transmitted to the originating end when the trunk is in an answered condition at the receiving end.)
T	*Dial selective signalling, two-tone:* This type of signalling is used on multipoint private line circuits. Two audio-frequency tones of 600 and 1500 Hz are controlled by a dial to transmit the desired digits. At the far end, the tones activate a selector which decodes and recognizes combinations of digits.
(Cont)	

Figure 6-7. Description of pulsing and signalling codes.

CODE	DESCRIPTION
(Cont)	
V	*Revertive:* In this dc pulsing arrangement, intelligence is transmitted in the following manner: (a) The equipment at the originating location presets itself to represent the number of pulses required and to count the pulses received from the terminating location. (b) The equipment at the terminating location transmits a series of pulses by the momentary grounding of its battery supply until the originating location breaks the dc path to indicate that the required number of pulses has been counted.
—	*No operation:* A hyphen is to be entered in character position 29 or 30, as appropriate, when no signalling function is performed.

Figure 6-7. Description of pulsing and signalling codes.

TRUNK TYPE	CODE
Directory assistance (local)	DA
Information (directory assistance — toll)	IN
Intercept	IR
Official	OF
Rate and route	RR
Repair service	RS
Time	TI
Weather	WE

Figure 6-8. Auxiliary service trunk codes.

TRUNK TYPE	CODE
Alarm	AL
Announcement (machine)	AN
Coin box	CB
Customer dial instruction	CD
CAMA office to CAMA operator desk	CP
Coin supervision	CS
Coin zone	CZ
Dial tone speed	DS
Emergency (911)	EM
Interposition	IP
Manual assistance	MA
Mobile radio	MB
No test	NT
Order wire	OW
Miscellaneous	MI
Peg count	PC
Plant department	PD
Permanent signal	PS
Speed of answer	SA
Service code	SC
Service observing	SO
Toll station	TA
Test desk	TK
TSP unit to the TSP position	TP
Vacant code	VC
Verification	VR

Figure 6-9. Miscellaneous trunk codes.

REFERENCE

1. Wright, A. J. "Where Things Are — In Common Language," *Bell Laboratories Record,* Vol. 55 (July/Aug. 1977), pp. 192-197.

Chapter 7

Traffic Engineering Concepts

The design and layout of the switched telecommunications network is based on the principles of probability and statistics applied to the flow of traffic. It is assumed that not all customers wish to use the system at the same time so economies can be realized by providing equipment in sufficient quantities for only that number of people who might under ordinary conditions attempt simultaneously to place calls through the network. This principle of common usage is applied to many aspects of the telephone system (including operators, trunks, and common control switching systems and equipment), in fact, to virtually all facilities other than station sets. The specification of an economic combination and quantity of transmission paths is normally a traffic engineering responsibility; the manner in which the paths are provided and the facilities specified are largely a transmission engineering responsibility. Because the two disciplines interact, some traffic engineering concepts are provided here as background for better understanding of transmission engineering problems.

The most significant applications of traffic engineering concepts are in the provision of central office equipment and trunk groups between central offices. Since transmission engineers are only peripherally involved in the design, layout, and specification of central office equipment, this chapter is restricted to discussion of trunk traffic engineering techniques which apply to the switched network.

7-1 PRINCIPLES OF TRUNK GROUP ENGINEERING

Since there are about 20,000 end offices in the United States, direct interconnection would require $\frac{n(n-1)}{2}$ or $2(10^8)$ trunk groups and

would be highly impractical, if not impossible. The network layout and switching plans for interconnecting end offices are designed to concentrate traffic on trunk groups that are provided for various types of calls. For example, toll traffic from a given end office is usually concentrated on a toll connecting trunk group to carry that traffic into the toll portion of the network. Connections may then be extended to all parts of the world by means designed to provide economical toll service as well as a high percentage of successful completions. Some toll traffic may be routed directly to the destination office; such direct trunk groups are provided in cases where there is a strong community of interest between the two offices.

Consider the character of traffic originating in a typical end office. The amount of traffic varies widely from hour to hour; at 11:00 a.m., for example, there is normally a larger volume of traffic than at 4 a.m. The amount of traffic also varies from day to day. If this office happens to be in a business district, there is certainly more traffic on a business day than there is on a Sunday. If the office is in a residential area, the reverse may be true. There are also seasonal fluctuations. If the office is in a resort area, there is more traffic during the season than out of season. Within any given interval there are also fluctuations about a mean value caused by the statistical characteristics of subscriber calling habits. Figures 7-1 and 7-2 illustrate typical patterns encountered over various time periods.

Other variables that affect the magnitude and pattern of the offered traffic load include the number of subscribers served by the central office, the frequency with which calls are placed and their average duration (holding time), the relative frequency with which subscribers make intraoffice, interlocal, or toll calls, and the time of day these calls originate (distribution pattern). Toll calling patterns are further modified by distance, time zone, rate, and holiday considerations.

The traffic engineering problem is to organize the network and to provide the number of trunks necessary to meet various kinds of traffic demands. Sufficient trunks cannot be provided economically so that all calls might be served without delay, since there may well be 10,000 or more subscribers served by an end office, all of whom could in theory make calls at the same time. Economy is achieved by providing just enough trunks to limit the probability that offered calls may be blocked (i.e., not successfully completed). Statistical tech-

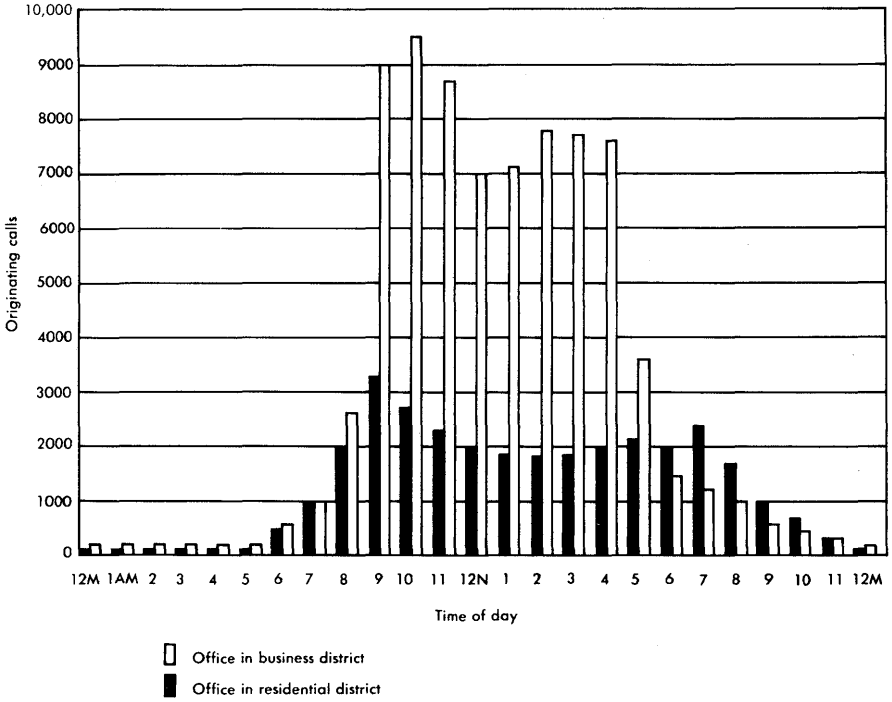

Figure 7-1. Typical time variations of originating calls at end offices.

niques described in this chapter have been developed to permit the determination of the number of trunks required to carry the offered load at the objective probability of blocking. Probability of blocking is generally expressed in the form B.01, B.02, etc., to indicate the percentage of offered calls that are expected to be blocked.* Thus, B.01 indicates that one call in 100 may be blocked, B.02 indicates two calls in 100 may be blocked, etc.

7-2 BASIC TRAFFIC DISTRIBUTIONS

The statistical short-term fluctuations of traffic load must be considered in the provision of equipment. It has been found by experimentation that traffic from a large number of sources tends to follow various mathematical distributions. These distributions can be de-

*Older symbology used P.01 to indicate that the probability of blocking was one in 100.

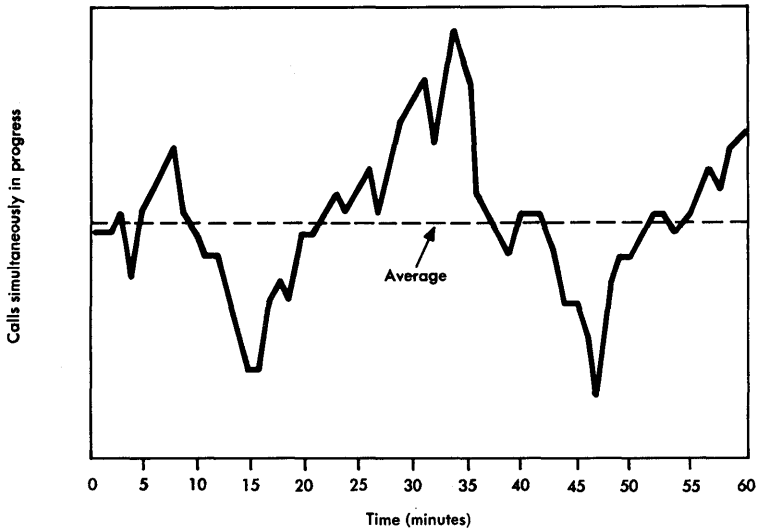

Figure 7-2. Typical variation of calls in progress in a central office.

veloped in several ways depending upon the various assumptions made regarding the traffic. The most useful of the distributions are those developed by Poisson, Erlang, and Neal-Wilkinson. Before these distributions and their resulting capacity tables can be used, it is necessary to understand what constitutes a traffic load and how this load is impressed upon and served by a group of trunks.

The Traffic Load

Traffic loads are usually expressed in hundred call seconds per hour (CCS) or erlangs. An erlang is defined as a traffic load sufficient to keep one trunk busy on the average. One erlang is equivalent to 36 CCS. Traffic load is the product of two components, the number of calls and their duration or holding time. For practical considerations, capacity tables used in the Bell System are based on an hour of load related to the probability of blocking in that hour. The hour (or series of hours for which the load is averaged) must be selected and the load determined for application to the trunk capacity tables. The capacity tables relate the three parameters: load, number of trunks, and probability of blocking. Thus, if two of the three parameters are known, the third can be obtained from the tables.

Load Distribution Assumptions

The capacity tables have been mathematically derived on the basis of probability laws and on certain assumptions about how load is offered to and served by a trunking system. The assumptions for three different capacity tables are presented in Figure 7-3.

ASSUMPTION	POISSON	ERLANG B	NEAL-WILKINSON
Immediate connection	X	X	X
Independent sources	X	X	X
Random arrival	X	X	X
Nonrandom arrival			X
Statistical equilibrium	X	X	X
Infinite sources	X	X	X
Blocked calls cleared		X	X
Blocked calls held	X		
Day-to-day load variations			X

Figure 7-3. Assumptions underlying Poisson, Erlang B, and Neal-Wilkinson capacity tables.

An understanding of these assumptions is necessary because traffic loads are not always offered in accordance with the assumptions and because traffic systems often impose restrictions on how traffic loads are served. It is important, therefore, to recognize where the assumptions do and do not apply so that actual load/service relationships can be properly interpreted.

The assumptions of immediate connection and independent sources have little impact on traffic analysis. Although connection time is never immediate, actual connection times are short enough that departures from the assumption normally need not be considered. Also, although some source dependency does exist (because a customer whose line is busy on an incoming call cannot originate a call), the effect on the assumption of independent sources is negligible and can be ignored. The remaining assumptions regarding random arrival, statistical equilibrium, infinite sources, disposition of blocked calls, and day-to-day variation are very significant in traffic analysis and must be considered in detail.

Random Arrival. The concept of a random offering of traffic is easily visualized but not so easily defined in precise terms. Perhaps the easiest way to clarify the concept of randomness is by citing extreme examples which conceivably could occur. First, at one extreme, one hour of usage (36 CCS) could be made up of one 60-minute call, two 30-minute calls, 120 30-second calls, etc. In each case, if the calls are offered one at a time in sequence, with one beginning as soon as the preceding one ends, the entire load can be carried on one trunk with no blocking. This ideal state of sequential offering is, of course, never realized. At the other extreme, all of the 120 30-second calls could be offered to the system simultaneously. Under these conditions, 120 trunks, one per call, would be required to provide zero blocking. If it is assumed that no other calls entered the system during the hour, all the trunks would be idle during the remaining 59-1/2 minutes. From these extreme examples, it can be seen that the distribution of calls making up the load obviously can have a major effect on trunk requirements. The distribution of calls on which Poisson, Erlang B, and Neal-Wilkinson capacity tables are based must lie somewhere between the sequential offering and the simultaneous offering. Mathematically, random arrival is equivalent to a Poisson arrival process, i.e., one for which the interarrival times are exponentially distributed.

For a Poisson distribution, the mean value is equal to the variance. Studies have proven that under normal circumstances the traffic initially offered to a group of trunks can be treated as random (Poisson) and the results obtained by entering Erlang B capacity tables with a single hour of load are adequate for determining trunk requirements. It is important to recognize, however, that many things cause traffic to be nonrandom. Natural occurrences such as snowstorms can destroy randomness and under such conditions, the capacities predicted by the capacity tables are too small.

Nonrandomness can also be system-induced; where this is so, its cause and effect are identifiable and procedures have been developed to cope with it. For example, overflow traffic is always nonrandom in spite of the fact that it might have been random on its initial offering. In mathematical terms, the variance of this type of load distribution is larger than its mean; this form of nonrandomness, called peakedness, is a characteristic of all overflow traffic. The Neal-Wilkinson tables recognize peakedness and specify more trunks than do the Erlang B tables which were derived on the assumption of random traffic. The number of additional trunks is computed by a method that

involves converting the peaked load to an equivalent random load and using the Erlang B formula.

Statistical Equilibrium. The assumption of randomness during any hour of interest carries with it the assumption of statistical equilibrium, which can be broadly defined as the absence of any trend in load during the hour. If call arrivals exceed call departures or vice versa in any segment of the hour, there is an upward or downward trend in offered load. This trend, called *skewness,* is an absence of statistical equilibrium which normally manifests itself as a bunching of offered calls into a short time period such as that during a television commercial or during the early part of an hour after a rate reduction goes into effect as illustrated in Figure 7-4.

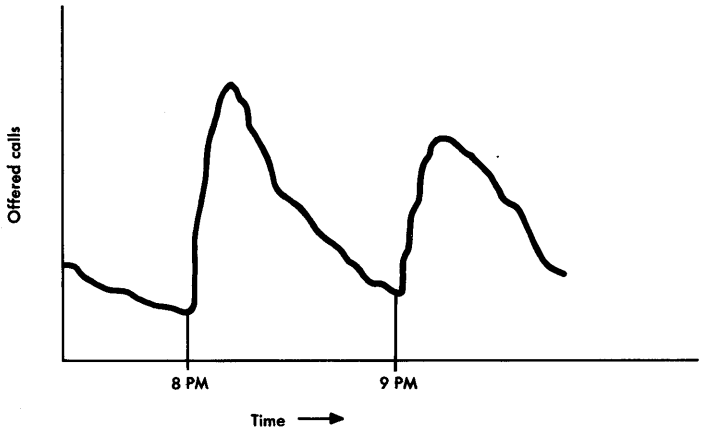

Figure 7-4. Skewed pattern of traffic.

Skewness is not specifically provided for in either the Erlang B or Neal-Wilkinson tables. However, since the effects of skewness are similar to those caused by peakedness, the Neal-Wilkinson tables can be used to determine trunk requirements.

Infinite Sources. When the number of sources is infinite, the probability of blocking is maximum for a fixed value of offered load. As the number of sources is reduced, the probability of blocking is also reduced. If only one source could offer traffic to one trunk, there would be zero probability of blocking. As sources are added, the probability of blocking increases until maximum probability of blocking exists

with infinite or unlimited sources. The effect of adding sources is nonlinear, however, and a point is reached where the increase in the probability of blocking is negligible. The inverse is also true; i.e., where the probability is high, the number of sources must be reduced significantly before any practical increase in capacity can be obtained. Stated another way, if the number of sources served by a fixed number of trunks increases, the capacity of the trunk group decreases to a limit for a fixed probability of blocking. This can be seen in Figure 7-5.

NUMBER OF SOURCES	CCS CAPACITY OF 10 TRUNKS (FOR 1% BLOCKING)
10	360 (Zero blocking)
11	250
12	229
15	203
20	183
50	162
75	157
100	154
320	149
Infinite	149

Figure 7-5. The effect of the number of sources on capacity.

A general rule is that when the number of sources is ten or more times the number of trunks, the effect is that of infinite sources and the infinite source assumption is valid.

Disposition of Blocked Calls. The assumptions regarding the disposition of blocked calls differ. In the Poisson analysis, it is assumed that blocked calls are held; i.e., a call failing to find a trunk is held for up to one full holding time and then disappears. If a trunk should become available before the end of the holding time, it is seized and held for the remainder of the holding time and then the call disappears. In the Erlang B and Neal-Wilkinson analyses, it is assumed that blocked calls are cleared; i.e., a call failing to find a trunk is immediately cleared and does not reappear.

The assumption that blocked calls are cleared makes the Erlang B analysis suitable for the derivation of alternate routing trunk tables, where if calls fail to find an idle trunk they are in fact cleared because they are offered to and assumed to be carried by another route. The

assumption of held calls in Poisson analysis is not quite so logically applied since in actual practice most systems are not arranged to hold calls waiting for a trunk. Instead, when a trunk is not available, the call is ordinarily routed to a no-circuit signal. The Neal-Wilkinson tables have replaced the Poisson tables in trunk traffic analysis. Certainly, the assumptions of Erlang B and Neal-Wilkinson more closely fit modern multistage alternate route networks.

The significance of the different assumptions can be seen in Figure 7-6. The indicated degree of blocking (with the same offered load) is higher with the Poisson assumptions because blocked calls are assumed to result in trunk holding times where a trunk becomes available before the end of a full holding time.* Under Erlang B and Neal-Wilkinson assumptions, blocked calls are immediately cleared from the system and no holding time results.

Day-to-Day Variation. Busy-hour offered traffic loads generally vary from day to day; thus, blocking levels must also vary. While the size of trunk groups is determined by averaging busy hours of offered load data from 20 days to obtain a single value for use in the trunk capacity tables, there is an unavoidable problem that arises when the twenty values have a significant day-to-day variation. The basic problem is that average blocking on a trunk group is higher when day-to-day fluctuations exist in the offered load than when little or no fluctuations exist. Therefore, engineering procedures must account for these daily traffic variations to assure that actual average blocking is at the desired level.

The reason for the increase in average blocking caused by day-to-day variations in traffic is the nonlinearity of the curve relating blocking to offered load on a trunk group, as shown in Figure 7-7. Imagine that twenty busy hours of load are marked as twenty dots on the horizontal axis in this figure. The loads associated with these twenty dots have an average CCS. In each hour there is some blocking on the trunk group which can be found by moving vertically from each dot to the blocking curve and then horizontally to the blocking scale. By doing this exercise, it will be found that uniformly spaced dots on the offered load axis result in a distribution on the blocking axis which has a long tail toward higher blocking levels. The average

*An attempted trunk seizure not immediately connected is defined as a blocked call even though it is assumed to be held and connected through at a later time.

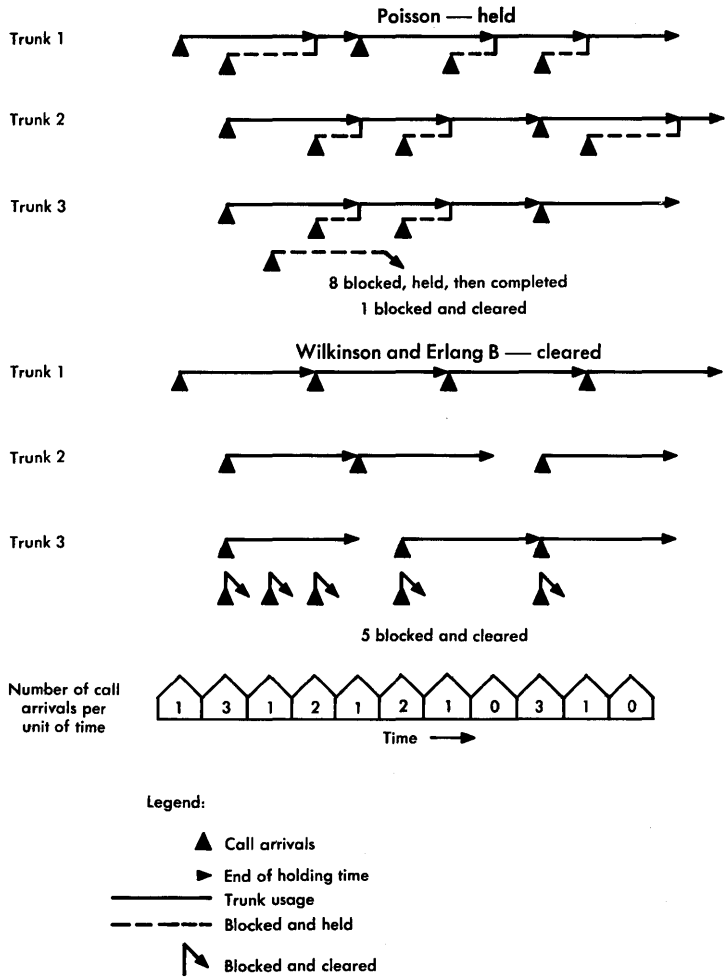

Figure 7-6. Blocking effects, calls held versus calls cleared.

blocking, therefore, is not at a level corresponding to the average load; it is higher. This increased blocking results in more average overflow than Erlang B would predict; adjustment tables are used to obtain approximately correct average overflow where Erlang B tables are used. The Neal-Wilkinson tables are separated into sections for different levels of day-to-day variation: none, low, medium, and high. The more the variation, the more trunks required to assure that the average service level is at the objective. In summary, while traffic

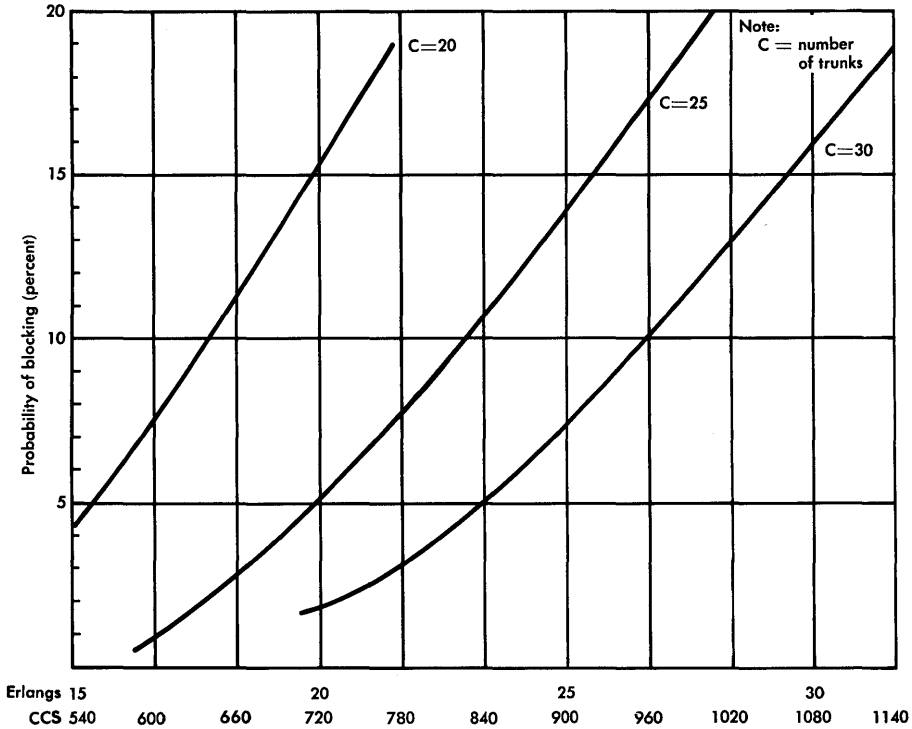

Figure 7-7. Erlang B load/blocking curves for 20 to 30 trunks.

loads vary from day to day, the above engineering procedures help assure that service objectives are met.

Figure 7-8 is a family of Erlang B blocking curves for 5 to 80 trunks and 0 to 60 erlangs. (Figure 7-7 is also a family of load blocking curves but drawn to a linear scale to show the nonlinearity of blocking to offered load.) A small increase in offered load results in a disproportionate increase in blocking. Since these curves do not lend themselves to accurate interpolation, the more familiar trunking tables are normally used. Figure 7-9 shows the relationship of the curves to the alternate routing trunk tables.

Capacity Tables

The table of Figure 7-10 is an excerpt from the Neal-Wilkinson capacity tables for 1 to 50 trunks, B.01 probability of blocking, and low day-to-day variation, all related to peakedness factors (PF) from

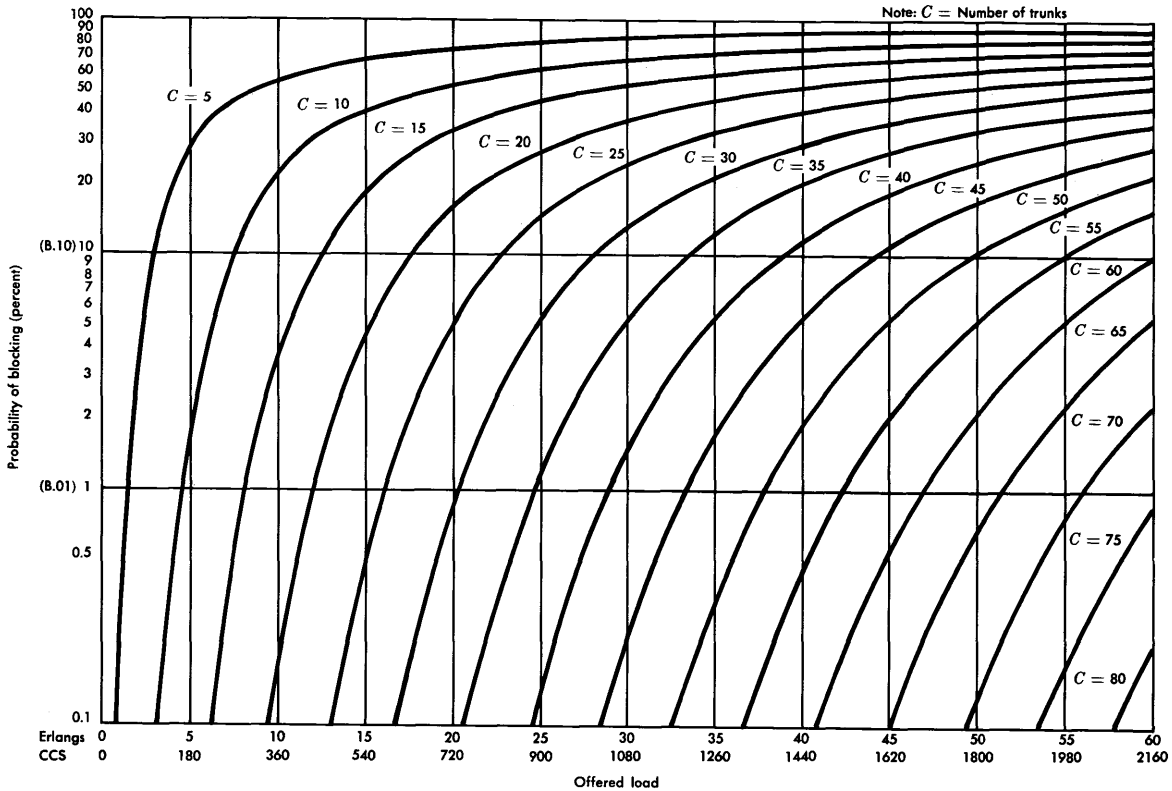

Figure 7-8. Erlang B load/blocking curves for 5 to 80 trunks.

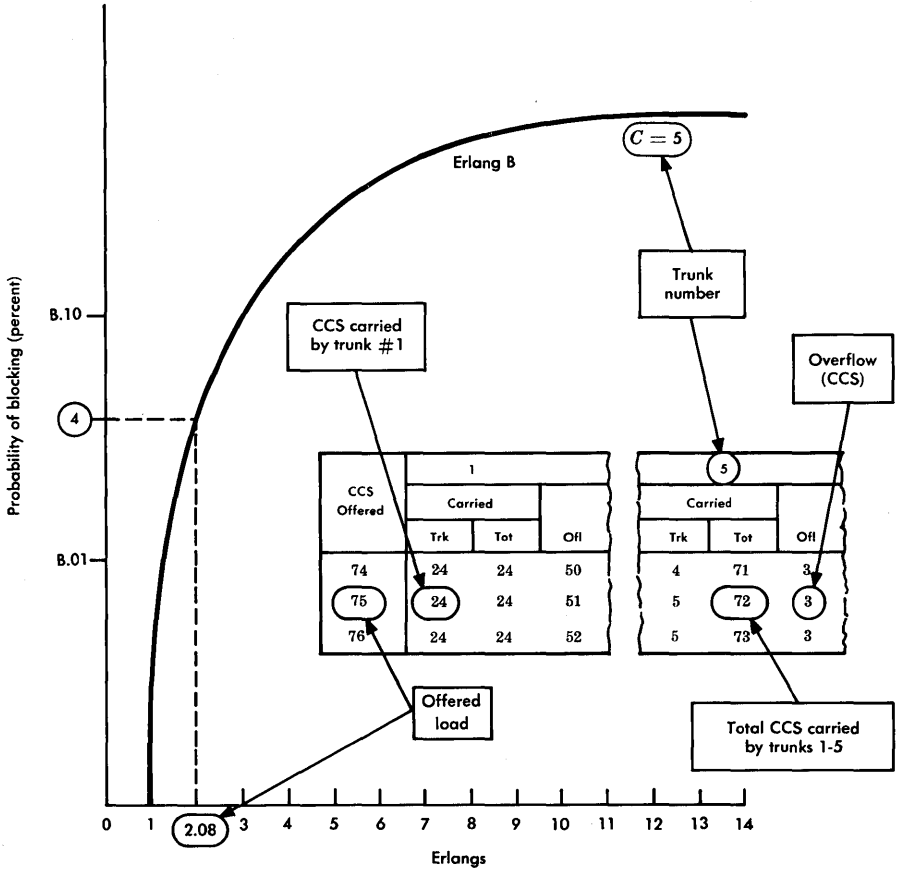

Figure 7-9. Relationship of load/blocking curve to alternate routing trunk table.

1.0 to 2.4 These tables are used with final groups (which receive overflow from other groups) or only-route groups (which receive no overflow and do not themselves overflow). Since objective blocking levels are ordinarily stated for these group types, the tables are constructed to permit the determination of the number of trunks for a stated probability of blocking, load, peakedness, and day-to-day variation.

As previously discussed, the alternate route trunk tables based on Erlang B with the assumption of lost calls cleared are used where a trunk group overflows to another route. With such groups, called

Average offered load, CCS

Neal-Wilkinson B.01L Trunk Capacity Table for Full Access Trunk Groups, Low Day-to-Day Variation Allowance

NO. TRKS	PEAKNESS FACTORS								NO. TRKS
	1.0	1.1	1.2	1.3	1.4	1.5	1.6	2.4	
1	2	0	0	0	0	0	0	0	1
2	8	6	0	0	0	0	0	0	2
3	19	15	12	0	0	0	0	0	3
4	34	29	25	21	18	0	0	0	4
5	50	46	41	36	32	28	24	0	5
6	68	63	59	54	49	44	39	0	6
7	88	83	77	72	67	62	57	0	7
8	109	103	97	92	87	81	76	0	8
9	131	125	118	113	107	101	96	54	9
10	153	147	140	134	128	122	116	72	10
11	177	170	163	156	150	144	138	91	11
12	201	193	186	179	172	166	160	111	12
13	225	217	209	202	195	189	182	132	13
14	250	241	234	226	219	212	205	154	14
15	275	266	258	250	243	235	228	177	15
16	300	292	283	275	267	259	252	199	16
17	326	317	308	300	292	284	276	222	17
18	353	343	334	325	317	309	301	245	18
19	379	369	360	351	342	334	326	268	19
20	406	396	386	377	368	359	351	292	20
21	433	422	412	403	394	385	376	316	21
22	460	449	439	429	420	411	402	340	22
23	487	477	466	456	446	437	428	364	23
24	515	504	493	483	473	463	454	389	24
25	543	531	520	510	499	489	480	414	25
41	1005	990	975	961	947	934	922	833	41
42	1035	1020	1005	990	976	963	950	861	42
43	1065	1049	1034	1020	1005	992	979	888	43
44	1095	1079	1064	1049	1035	1021	1008	916	44
45	1125	1109	1093	1078	1064	1050	1037	944	45
46	1155	1139	1123	1108	1093	1079	1066	971	46
47	1185	1169	1153	1137	1122	1108	1095	999	47
48	1215	1199	1182	1167	1152	1137	1124	1027	48
49	1245	1229	1212	1197	1181	1167	1153	1055	49
50	1276	1259	1242	1226	1211	1196	1182	1083	50

Figure 7-10. Example of Neal-Wilkinson table.

high-usage groups, the probability of blocking is not ordinarily of direct concern but it is necessary to be able to relate the offered and carried load, the overflow load, the number of trunks, and the load on the last trunk in order properly to size the groups and the alternate routes. The format of the Erlang B alternate routing trunk tables permits an analysis of these relationships. The format of the various tables differs in accordance with the intended use. One such table is illustrated in Figure 7-11.

7-3 TRUNK NETWORK DESIGN

The present design of the trunk network has developed over many years, partially on the basis of an evolving body of traffic theory and partially as a result of advancing technology. Problems of trunk group efficiency and size, service criteria (such as the probability of blocking), alternate routing, and load allocation are all involved in modern design practices.

Trunk Group Efficiency and Size

For any trunk group to which access is provided in a particular sequence, the first trunk in the sequence carries the highest load. This is true because the same trunk is always selected first and is reselected when idle. Succeeding trunks in the access sequence carry decreasing amounts of load with the trunk which is selected last carrying the least load because it is selected only when all other trunks are busy. The trunk selected last, therefore, is the least efficient trunk and is commonly referred to as the *last trunk.* It can be seen that if the access sequence is low-to-high the last trunk will be the highest numbered trunk but if the sequence is high-to-low the last trunk will be the lowest numbered trunk. In those switching systems where trunk access is random, rather than ordered as just described, it is not possible to identify a particular trunk as the last trunk and the load is more evenly distributed across the trunks in the group. However, the total capacity of the group is the same regardless of access sequence. Rather than to identify the last trunk with a particular trunk number, as is often done to visualize the effect, it is better to determine the load carried by n trunks (where n is the number of trunks in the group), subtract the load carried by $n - 1$ trunks, and call the remainder the capacity of the nth or last trunk. With the same offered load, the probability of blocking is different for n trunks than for $n - 1$ trunks.

Hundred call-seconds carried by and overflowing from each trunk shown in column headings and total CCS carried on group

CCS Offered	Trunk Number																		CCS Offered
	7			8			9			10			11			12			
	Carried			Carried			Carried			Carried			Carried			Carried			
	Trk	Tot	Ofl	Trk	Tot	Ofl	Trk	Tot	Ofl	Trk	Tot	Ofl	Trk	Tot	Ofl	Trk	Tot	Ofl	
222	18	178	44	15	193	29	11	204	18	7	211	11	5	216	6				222
224	18	179	45	15	194	30	11	205	19	8	213	11	5	218	6				224
226	18	180	46	15	195	31	11	206	20	8	214	12	5	219	7				226
228	18	181	47	15	196	32	12	208	20	8	216	12	5	221	7				228
230	19	182	48	15	197	33	12	209	21	8	217	13	6	223	7				230
232	19	182	50	16	198	34	12	210	22	9	219	13	6	225	7	3	228	4	232
234	19	183	51	16	199	35	12	211	23	9	220	14	6	226	8	4	230	4	234
236	20	184	52	16	200	36	12	212	24	9	221	15	6	227	9	4	231	5	236
238	20	185	53	16	201	37	13	214	24	9	223	15	6	229	9	4	233	5	238
240	20	185	55	16	201	39	13	214	26	10	224	16	7	231	9	4	235	5	240
242	20	186	56	17	203	39	13	216	26	10	226	16	7	233	9	4	237	5	242
244	20	187	57	17	204	40	13	217	27	10	227	17	7	234	10	4	238	6	244
246	20	187	59	17	204	42	14	218	28	10	228	18	7	235	11	5	240	6	246
248	20	188	60	17	205	43	14	219	29	11	230	18	7	237	11	5	242	6	248
250	21	189	61	17	206	44	14	220	30	11	231	19	7	238	12	5	243	7	250
252	21	189	63	18	207	45	14	221	31	11	232	20	8	240	12	5	245	7	252
254	21	190	64	18	208	46	14	222	32	11	233	21	8	241	13	6	247	7	254
256	21	190	66	18	208	48	15	223	33	12	235	21	8	243	13	6	249	7	256
258	21	191	67	18	209	49	15	224	34	12	236	22	8	244	14	6	250	8	258
260	22	192	68	18	210	50	15	225	35	12	237	23	9	246	14	6	252	8	260
262	22	193	69	18	211	51	15	226	36	12	238	24	9	247	15	6	253	9	262
264	22	193	71	19	212	52	15	227	37	12	239	25	9	248	16	7	255	9	264
266	22	194	72	19	213	53	16	229	37	12	241	25	9	250	16	7	257	9	266
268	22	194	74	19	213	55	16	229	39	13	242	26	9	251	17	7	258	10	268
270	22	194	76	20	214	56	16	230	40	13	243	27	10	253	17	7	260	10	270
272	22	195	77	20	215	57	16	231	41	13	244	28	10	254	18	7	261	11	272
274	23	196	78	20	216	58	16	232	42	14	246	28	10	256	18	7	263	11	274
276	23	196	80	20	216	60	17	233	43	14	247	29	10	257	19	7	264	12	276
278	23	197	81	20	217	61	17	234	44	14	248	30	10	258	20	8	266	12	278
280	23	197	83	21	218	62	17	235	45	14	249	31	10	259	21	8	267	13	280

Figure 7-11. Example of Erlang B alternate routing trunk table.

This concept of diminishing returns as trunks are added to a group becomes important in the economic sizing of high-usage groups where the load which a trunk carries is weighed against the cost of the trunk in selecting the proper route for the traffic.

The amount of load which can be carried per trunk in a group is a function of both offered load and group size. As the offered load to a group increases, the load carried per trunk increases. Theoretically, if the offered load is high enough, the point is reached where the load carried by each trunk approaches its full capacity of 36 CCS. Inspection of Figure 7-10 shows that as the number of trunks in a group increases, the capacity per trunk increases for a given probability of blocking. For example, for a peakedness factor of 1.0, increasing the number of trunks in a group from 5 to 10 increases the capacity per trunk from 50/5 = 10 CCS to 153/10 = 15.3 CCS. Doubling again from 10 to 20 trunks, however, only provides an increase in capacity from 15.3 CCS per trunk to 406/20 = 20.3 CCS per trunk. It can be seen, therefore, that large groups are more efficient than small ones but that the increase in efficiency levels off as the group becomes larger. The greatest increase in capacity per trunk occurs when small trunk groups are made larger.

Trunk efficiency is usually expressed in terms of percent occupancy and is defined as the ratio of carried load to total capacity. Total capacity is determined by multiplying the number of trunks in a group by 36, the maximum hourly CCS capacity of each trunk. For example, the maximum CCS capacity of a 14-trunk group is 14×36, or 504 CCS. From Figure 7-10, a 14-trunk group offered a load of 250 CCS of random traffic results in one percent blocking (2.5 CCS). The resultant carried load is 247.5 CCS and the percent occupancy is 247.5/504 = 49 percent. Typical efficiency (occupancy) for groups of 1 to 100 trunks at two values of blocking probability are shown graphically on Figure 7-12. It is evident from the figure that as the group size increases, the total available capacity can be utilized more efficiently without degrading service. Also evident is the fact that the higher the efficiency, the smaller the margin that remains for traffic peaks caused by surges of traffic. A practical example of this occurs in large metropolitan areas where, on days of severe storms, the percent overflow on large groups runs far in excess of the percent overflow on smaller groups. Particular caution is necessary where large groups engineered for B.01 blocking (final and only-route) may be subjected to heavy surges of traffic.

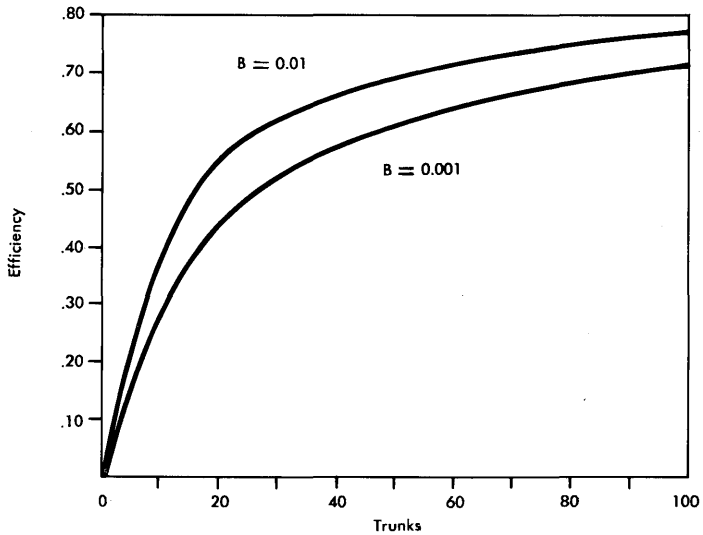

Figure 7-12. Efficiency/number of trunks in a group.

Service Criteria

Since it is prohibitively costly to provide enough trunks so that no blocking can ever occur, trunking service criteria specifying acceptable service levels have been established. The level of service which is acceptable depends upon customer expectation, the cost of providing the service, and the ability to measure and administer the network based upon that service level.

The present service objective is B.01 for both metropolitan (local) and long haul (toll) trunk groups engineered to meet grade-of-service objectives. This objective applies during the average busy season busy hour (ABSBH). The busy season is defined to be that three month period (not necessarily consecutive) during which the busy-hour loads are the greatest.

The relationship of the trunking service objective (B.01) to the service a customer perceives is not directly determinable. For example, if a network cluster* has 80 percent of its offered traffic carried

*A network cluster consists of a final trunk group and all subtending high-usage groups overflowing either directly or indirectly to it.

on high-usage trunks, the blocking for the network cluster as a whole is less than one percent because only 20 percent of the load is subject to any blocking at all. On the other hand, a call can be blocked at any one of a series of final links in the connection or because of matching loss in the originating switching system, the terminating switching system, or any tandem switching system encountered. The customer experiences blocking on the end-to-end connection, some of which is due to trunk groups and some due to switching systems. End-to-end blocking cannot be calculated in general because of the different time period that the network piece parts are busy and because of the fact that the same call can be routed different ways at different times. The closest thing to a measure of end-to-end service is that provided by dial line service observing (DLSO) which measures end-to-end blocking for a sample of calls throughout the day (not just during the busy hour). Recent measurements have shown average end-to-end blocking levels in the range of one to two percent. This appears to be acceptable from a customer point of view suggesting that the service objectives for the trunks and switching systems are also acceptable.

In addition to customer satisfaction on the average, B.01 blocking appears to provide acceptable service levels during periods of high offered traffic. Since B.01 is an objective for the ABSBH, there are days on which blocking is greater than one percent during the busy season (typically, Mondays are higher than the average). Also, every year certain events such as snowstorms or emergencies can cause traffic volumes substantially above the ABSBH levels. As networks have grown and high-usage development increased, the ability of the network to absorb these overloads has diminished. Engineering at B.01 provides more "ready-to-serve" time in the network to handle high traffic loads without severe degradation of overall service.

Another factor of importance is that service levels and loads are calculated on the basis of a 20-day average of the underlying process. Therefore, the basic process cannot be known with certainty and some groups, correctly engineered on the basis of measurements, exhibit blocking greater than expected. It has been shown that if a number of trunk groups are engineered for B.01 based on 20 days of data, a certain small percentage of them will have an ABSBH blocking greater than three percent. If trunk groups were all engineered for a higher level of blocking, some fraction of them would experience a relatively high (and possibly unacceptable) level of blocking.

Alternate Routing

In the toll portion of the network there are about 2000 offices, all of which must be capable of interconnection. Direct interconnection would require about two million trunk groups, most of which would carry extremely low volumes of traffic. This would clearly be economically unacceptable. Therefore, other methods of organizing and grouping the flow of traffic have evolved. These methods utilize such concepts as a multilevel switching hierarchy and alternate routing.

The alternate routing concept and the way it improves the traffic handling capabilities of a network are illustrated in Figure 7-13. Direct interconnection of the eight toll centers shown would require $(8 \times 7)/2 = 28$ trunk groups. By routing all traffic through the primary center, only eight trunk groups are needed and these eight groups would operate much more efficiently than the original 28 would. However, total network cost per carried CCS would not necessarily be minimized by this configuration.

If the volume of traffic between offices 2 and 3 is high, it might prove economical to install a trunk group between those two offices, as indicated by the dashed line of Figure 7-13. This possibility suggests the concept of alternate routing. The direct route between offices 2 and 3 may be designed to carry only a portion of the traffic

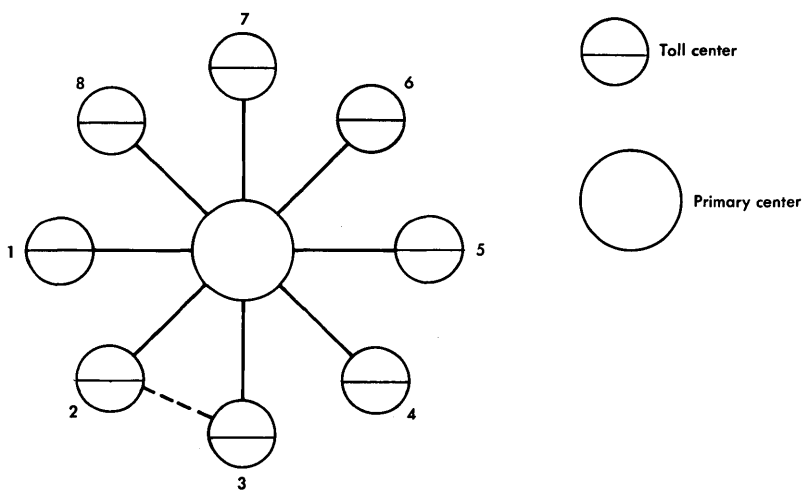

Figure 7-13. Routing of traffic between toll centers through a primary center.

with the overflow carried over the alternate trunk groups through the primary center. Traffic studies show that this arrangement can generally be operated more efficiently, i.e., less cost per CCS carried, than either a network made up entirely of directly interconnected offices or a network in which all traffic is carried through the primary center.

The concept of a multilevel hierarchy of switching and trunking may be expanded as in Figure 7-14. Here, direct interconnection of the primary centers results in a three-level hierarchy (including the end offices, which are not shown). The alternate route possibilities increase as the network expands as shown by the paths between toll centers 2 and 3 and between toll centers 4 and 5. The next step would be to switch and interconnect parts of such networks through another level (sectional centers) and so on, until the entire system is served. The switched network has been developed in this manner with a five-level hierarchy presently in use.

A key factor in the design of a multilevel switching network and in the realization of economy through alternate routing is the non-

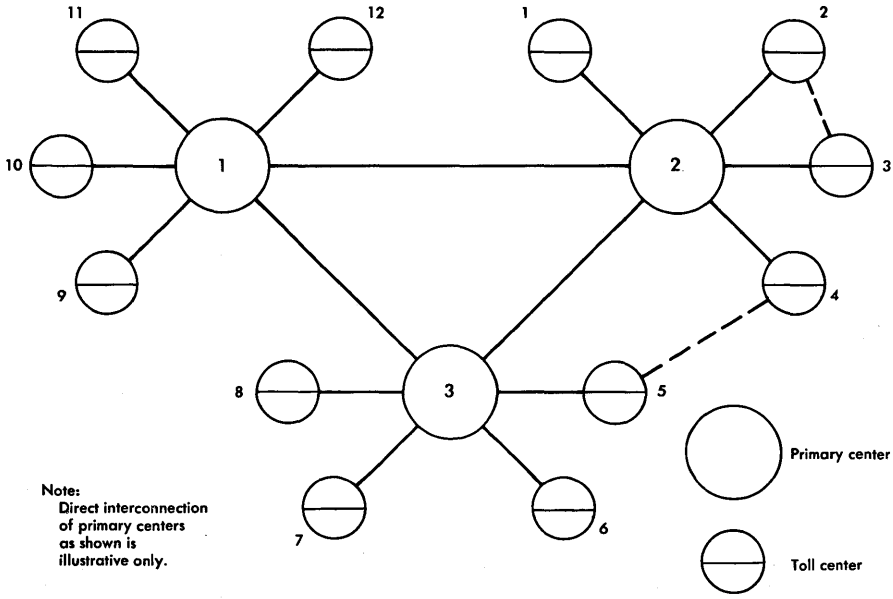

Figure 7-14. Routing of traffic between toll centers through several primary centers.

coincidence of traffic offerings. Assume that office 4 of Figure 7-13 handles predominantly business traffic with a morning busy hour, office 5 handles predominantly residential traffic with an evening busy hour, and office 2 handles an even mix. Under this set of conditions, trunks from office 2 to the primary center handle peak traffic between offices 2 and 4 during the morning busy hour and peak traffic between offices 2 and 5 during the evening busy hour. This is an illustration of the noncoincidence of busy hours. Similar advantage can be taken of the noncoincidence of busy seasons. Capitalizing on the economic advantages of these time/load relationships is a major objective in the trunk estimating process.

In the concept of multilevel network configurations, every office has a single office of higher class to which it is connected and on which it is said to "home." The offices of highest class are completely interconnected. There is a logical progression of traffic in the hierarchy such that there is a set of backbone or final routes available to a call from any one point in the hierarchy to any other. Additional trunk groups may be placed between any pair of offices having sufficient traffic to justify them economically; in fact, there are thousands of such high-usage trunk groups in the network today. Metropolitan (local) portions of the network are generally two-level while the toll portion is a five-level network. A typical homing arrangement in the five-level network is shown in Figure 7-15.

Load Allocation

The process of determining that portion of a given load to be carried by a high-usage group and that portion which should be offered to an alternate route is called *load allocation.* The objective is to provide trunks in such numbers in both the direct and alternate routes that the traffic between a given pair of offices or switching entities can be handled at the least possible cost per carried CCS consistent with service requirements.

Load allocation requires a knowledge of the offered load between terminals (during the hours of interest), the cost of a direct path between terminals, and the cost of an alternate route (including intermediate switching) between terminals. To select the most economical trunking arrangement, it is necessary to relate costs and trunk efficiencies of the direct and alternate routes for a stated, busy-hour, offered load. The procedure is essentially a cost balancing in which

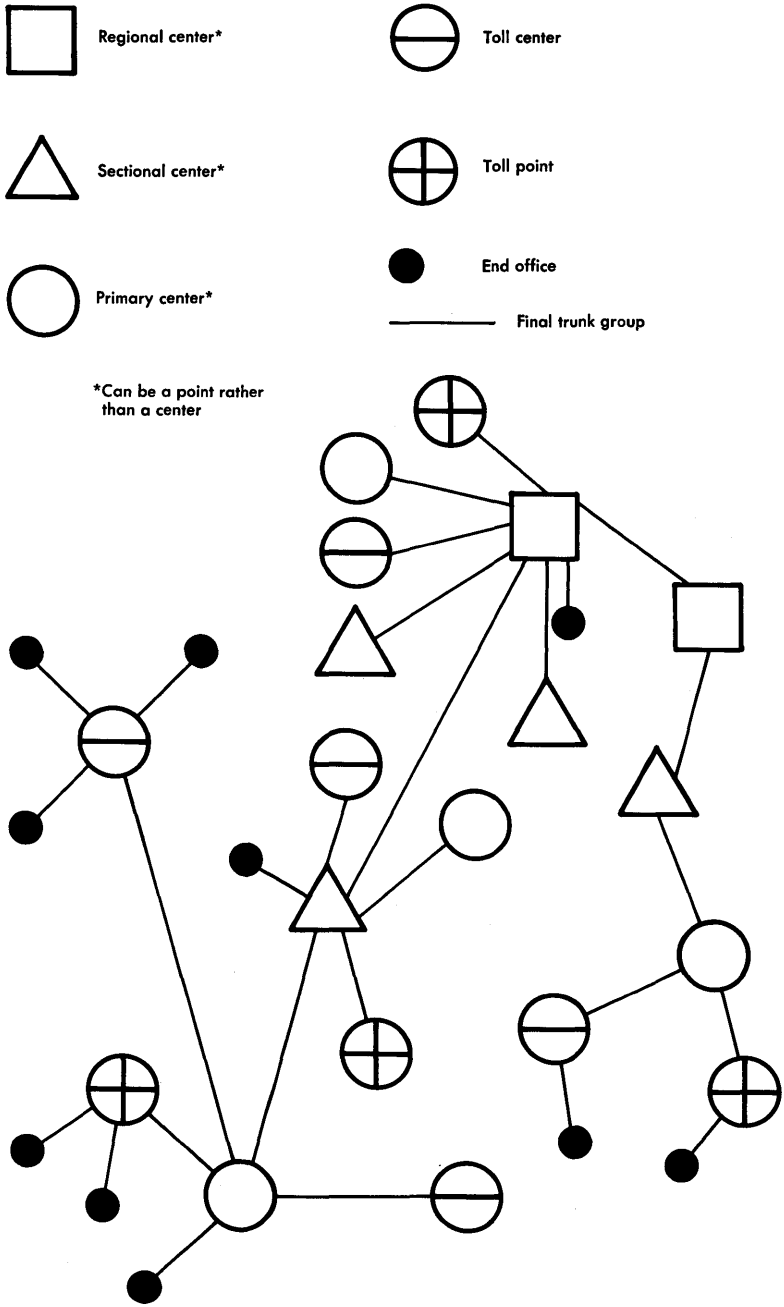

Figure 7-15. Typical toll network homing arrangements.

the cost of carrying a unit of traffic on the high-usage (HU) group is balanced against the cost of carrying it on the more expensive but more efficient alternate route group.

The procedure may be best described by developing a solution to a typical trunking problem such as that illustrated in Figure 7-16.

Given:

Offered load between points A and B = 240 CCS

Cost per path of alternate route (AR) via C = $1250

where C includes the cost of switching.

Cost per trunk of HU route, A to B = $1000

$$\text{Cost ratio} = \frac{\text{AR}}{\text{HU}} = \frac{\$1250}{\$1000} = 1.25.$$

On the basis of relative costs, it would obviously be cheaper to trunk all the load directly if the trunks in each route operate at the same efficiency. However, if the efficiencies of the two routes are different (and in practice they are), it becomes necessary to balance cost and efficiency to arrive at the most economical trunk layout. This cost/efficiency balance is expressed by

$$\frac{\text{AR cost}}{\text{HU cost}} = \frac{\text{AR efficiency}}{\text{HU efficiency}}.$$

It remains to determine the efficiency of the alternate route and solve the equation for the desired efficiency of the high-usage route.

Consider the loading of the final group represented by the right-hand column of Figure 7-16. The first-route offered load (no reroute traffic) is 742 CCS. To carry this at a blocking probability of one percent (B.01L) 32 trunks are required. If additional traffic were offered to the group, such as overflow traffic from A to B, it would be necessary to increase the number of trunks in order to maintain B.01 service. The addition of one trunk would increase the capacity of the group from 742 to 770 CCS.

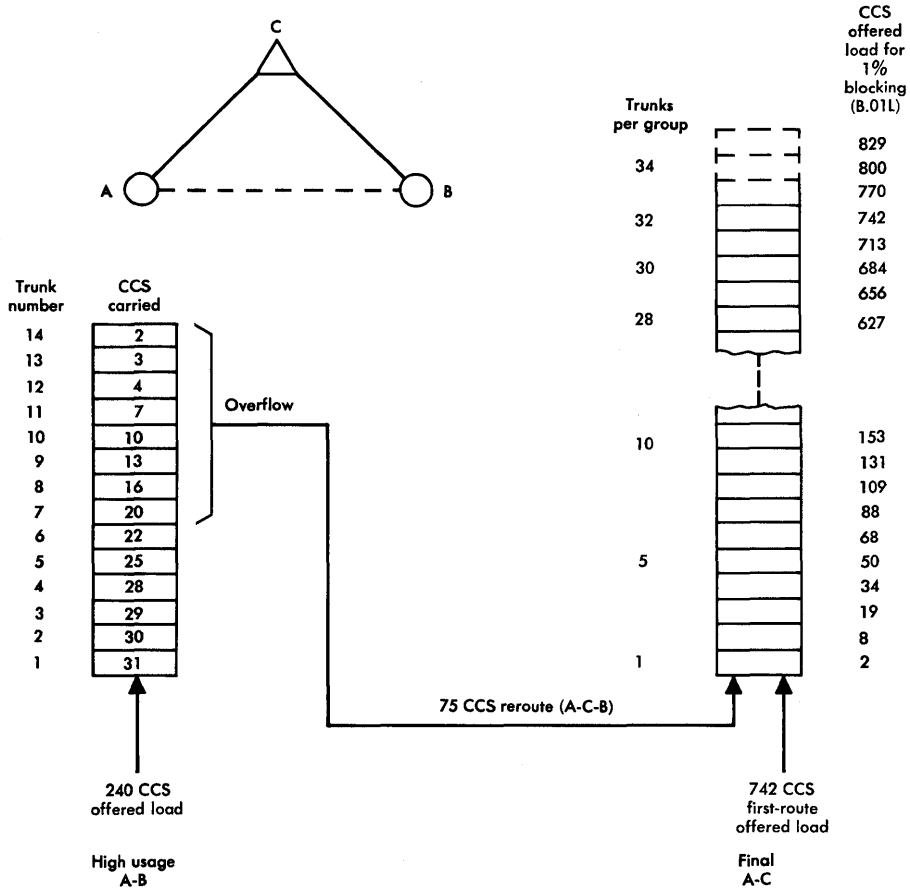

Figure 7-16. Basic principles of load allocation.

Thus, the capacity of the incremental trunk is the difference between the capacity of 32 trunks and the capacity of 33 trunks, or 28 CCS.* Here, capacity can be translated directly to efficiency since the efficiency of an incremental trunk equals the capacity divided by 36; when used in the cost ratio equation, the number 36 appears in both numerator and denominator and cancels. Thus, the efficiency of the incremental trunk in this example is 28 CCS. This efficiency

*Note that this is substantially higher than the average capacity of the trunks, which is only 770 CCS/33 = 23.3 CCS.

varies, of course, with trunk group size but the range of efficiencies in most practical situations is between 25 and 33 CCS per incremental alternate route trunk. It is neither practical nor necessary to compute the efficiency of incremental trunks precisely in each case. Experience has shown that a value of 26 CCS per trunk adequately fits the great majority of cases in metropolitan networks and 28 CCS per trunk is an adequate fit for intertoll networks.

When the efficiency of the incremental trunk added to the alternate route has been determined, it is possible to examine the amount of traffic that can be carried economically by the high-usage group. This is the load carried by the last trunk of the high-usage group, expressed in CCS, and is known as the economic CCS (ECCS):

$$\text{ECCS} = \frac{\text{Capacity of the incremental AR trunk}}{\text{Cost ratio}},$$

$$\text{ECCS} = 28/1.25 = 22.4.$$

The least efficient trunk added to the high-usage group must, therefore, carry 22.4 CCS in order to carry such load at the same cost per CCS as could be achieved by a trunk added to the alternate route.

Figure 7-17 is a graphic presentation of portions of the alternate routing trunk tables related to an offered load of 240 CCS. Curve A shows the CCS carried by each trunk of a group of 14 and curve B shows the total load carried by a group of n trunks for each value of n from 1 through 14. Thus, when $n = 5$, the load carried by all trunks is 143 CCS and the fifth or last trunk of the 5-trunk group carries 25 CCS.

It has been established that the least efficient trunk in the high-usage group of the example should carry 22.4 CCS. It remains, therefore, to identify on curve A that this is trunk number 6; hence, the high-usage group should contain six trunks. The total load carried by the six trunks is 165 CCS (curve B) and the overflow is the difference between that amount and the offered load of 240 CCS, or 75 CCS. The accommodation of 75 CCS overflow requires an increase from 32 to 35 trunks in the alternate route group. Thus, an addition of three paths to the alternate route replaces the requirement for eight less efficient additional trunks in the high-usage group. Since an ECCS value may be fractional, the value used to enter the alternate

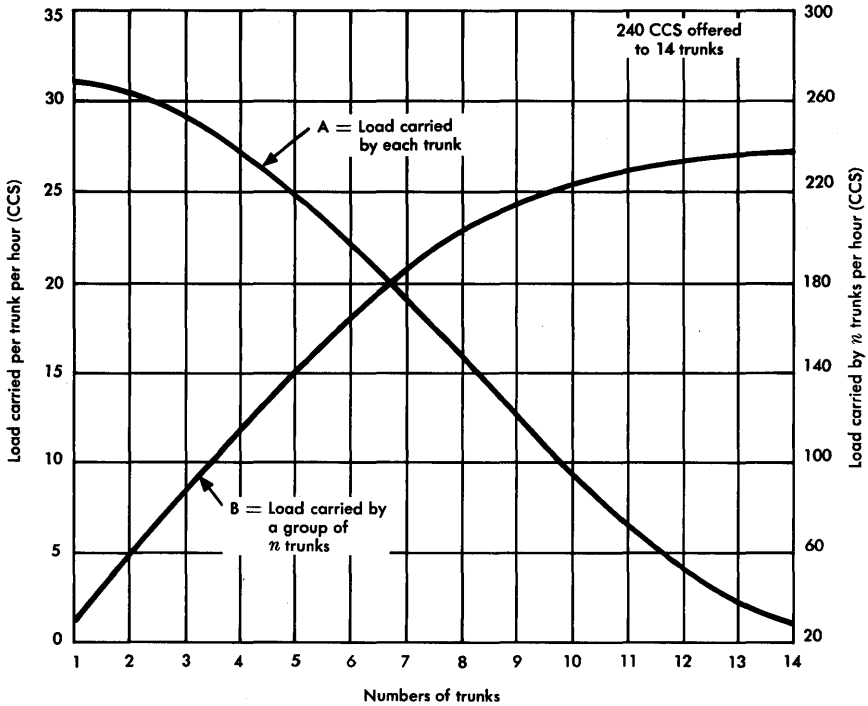

Figure 7-17. Distribution of offered load in accordance with Erlang lost-calls-cleared assumption.

routing trunk tables is derived by rounding to the nearest whole number. The ECCS of 22.4 is read as 22.

When the number of high-usage trunks is determined from the trunk tables and there is no trunk which carries precisely the number of ECCS desired, it is the practice to select as the last trunk the one which carries the lower CCS value. Suppose that a given high-usage group has an offered load of 240 CCS and an ECCS value of 18. Reference to Figure 7-11 discloses that the seventh trunk carries 20 CCS and the eighth trunk carries 16 CCS. The proper trunk requirement then is eight. The result is one more trunk in the group than would otherwise be the case, thereby improving service and, in effect, anticipating growth in the offered load.

Cost ratios can be calculated by using actual cost data or they may be estimated by using simplified procedures. Studies indicate that for many applications a cost ratio may deviate as much as 40 percent

from its true value with a cost penalty of less than 5 percent in the alternate routing triangle. Caution is necessary to ensure that significant errors are not introduced if simplified methods are used.

The highly efficient utilization of capacity which the principles of load allocation make possible and the additional efficiency gained through recognition of time/load relationships in the engineering process make alternate route networks very sensitive to variations in offered loads. For example, a 10-percent increase in traffic offered to the high-usage group of Figure 7-16 would increase the offered load to 264 CCS. The overflow to the final group would then be 93 CCS, an increase of 24 percent. With a 25-percent increase in offered load, the increase in traffic overflowed to the final group would be 63 percent. This "snowballing" effect accounts in large measure for the degree of congestion which occurs when the number of calls rises significantly above the anticipated level. It should be noted that when the load offered to the high-usage group is increased, the efficiency of that group increases somewhat; however, the load on the alternate route is significantly increased as well.

Adjustment for Nonrandomness

One of the engineering problems in determining trunk requirements for an alternate routing system is that of properly compensating for nonrandomness of offered loads. As previously discussed, all overflow traffic is nonrandom (peaked) ; therefore, an offered load containing overflow traffic will in turn be peaked. Since more trunks are required for nonrandom than for random traffic, both the amount of load and the peakedness of that load must be determined if the number of required trunks is to be accurate.

The Wilkinson Equivalent Random Theory provides a basis for making this determination. The determination involves a series of mathematical iterations which do not lend themselves to practical manual computation; however, a set of tables has been developed that provides close approximations of the effects of peakedness. For high-usage groups, these tables provide factors for the calculation of peakedness of loads and for the upward adjustment of overflow traffic to reflect this peakedness. For final groups, once the load and peakedness are known, trunks required can be determined from a Neal-Wilkinson table like that of Figure 7-10.

7-4 TRAFFIC MEASUREMENTS

Trunk engineering and administration are tailored to busy season average busy hour requirements as reflected by measurements of traffic flow and counts of messages, calls, and call attempts. The quality of the engineering and administration is dependent to a large degree upon adequate and accurate basic data.

Generally, traffic load information should be obtained on interlocal trunk groups for all business days of the busy season. From these data, the high four-consecutive-week period is selected to serve as a base for future engineering. Hourly readings are required to identify properly the busy hour loads.

Hourly readings are taken on all intertoll trunk groups during three 20-day periods each year and 5-day readings are taken in all intervening months. The 20-day records encompass the busy season for most intertoll groups and provide the basis for efficient trunk engineering and administration. The span of hourly readings is adequate to encompass day or evening busy-hour periods, including consideration of time zone differentials affecting groups extending over long distances. In this way, adequate information is obtained on time/load relationships.

Cameras have been widely used to photograph traffic registers to obtain busy-hour data more easily, more accurately, and less expensively than with manual methods. The filmed readings are read manually, automatically optically scanned, or key-punched and summarized by computer.

The Engineering and Administrative Data Acquisition System (EADAS) has introduced further improvement in traffic data collection. Through use of electronic scanners and built-in computers, the clerical expense and maintenance and administrative problems associated with traffic registers and cameras are largely eliminated. The EADAS is capable of providing not only the trunk data necessary for estimating but also the moment-to-moment data needed for dynamic network administration.

Registers are used to indicate the traffic load on a trunk group in various ways depending on the type of register. The following listing indicates the types of registers and the parameters measured:

TYPE OF REGISTER	MEASURED
Traffic usage recorder (TUR)	Carried CCS
Peg count	Attempts offered to the trunk group
Overflow	Attempts failing to find an idle trunk
All-trunks-busy (ATB)	Number of times all trunks in a group become busy
Last-trunk-busy (LTB)	Number of times the last trunk in a group becomes busy

The traffic usage recorder is the preferred device for measuring the load carried on trunk groups. Peg count and overflow are used in addition to TUR measurements for determining peakedness and for converting carried loads to offered loads. Percent overflow on final groups is required since these groups are provided on the basis of meeting an overflow blocking objective.

Since trunking service criteria are related to performance in the busy season average busy hour, load measurements must be taken across enough hours of the day to permit busy hour selection. There is a substantial loss of precision when daily or weekly readings are converted by means of ratios or factors to a busy hour equivalent. Also, readings must be taken over enough days to ensure an adequate sample.

Message count and load data are also used in the engineering process, primarily when traffic must be rerouted and the traffic volumes can not be determined from trunk group measurements. These data are usually derived from message billing records or special studies.

7-5 TRUNK ESTIMATING

Trunk estimates affect not only the provision of outside plant and trunk equipment but also the provision of central office common equipment and basic frames. For example, sender, register, and transverter engineering in the No. 5 Crossbar Switching System are directly related to the trunk estimate. The same estimate is a vital factor in engineering such equipment items as trunk link frames, sender link frames, incoming register link frames, call identity indexers, and coin supervisory link frames. The accuracy of a trunk estimate is critical to central office engineering.

Estimates of future loads on interlocal trunks are made by the application of a projection formula to the base period trunk CCS load. This formula utilizes factors developed from main station growth forecasts and calling rate trends. Estimates of future loads on intertoll trunks are made from trends developed from message counts and trunk group measurements. The base period recommended is the four consecutive weeks of the busy season during which the maximum calling load occurs for the area in question. Accuracy and completeness of data throughout the period is necessary to ensure base period data reliability.

Some groups which would ordinarily be engineered on a high-usage basis are instead engineered to meet a B.01 blocking objective. The decision to establish such a grade-of-service group and thereby to eliminate the possibility of overflow is influenced primarily by such factors as service protection, temporary equipment limitations, or temporary lack of capacity of a tandem office. In such cases, there must be careful assessment of the relative service and economic advantages.

7-6 TRUNK ADMINISTRATION

Trunk administration is the continuing evaluation of changes in traffic flow from week to week and season to season and the determination of the number of trunks required to meet the system service objective. The trunk administration program must be based on an adequate traffic measurement schedule since the current traffic load and number of trunks in service must be used as a base for projecting future needs. Consequently, inadequate trunk administration could result in trunk estimates of dubious accuracy and consequent poor service due to trunk shortages or unnecessary expense due to trunk surpluses.

Effective trunk administration depends on timely availability of trunk equipment and outside plant and the proper assignment of trunks to switching systems in a manner that maintains an optimum level of usage on each trunk frame. The ability to achieve the latter is largely determined at the time a traffic order is prepared. The traffic order designates the number and type of trunks to be located on each frame. In many instances, a layout that permits optimum loading requires a substantial number of trunk transfers from existing frames to new frames.

REFERENCES

1. Campbell, G. A. "Probability Curves Showing Poisson's Exponential Summation," *Bell System Tech. J.*, Vol. 2 (Jan. 1923), pp. 95-113.
2. Thorndike, F. "Application of Poisson's Probability Summation," *Bell System Tech. J.*, Vol. 5 (Oct. 1926), pp. 604-624.
3. Fry, T. C. *Probability and Its Engineering Uses* (New York: D. Van Nostrand Co. Inc., 1928).
4. Truitt, C. J. "Traffic Engineering Techniques for Determining Trunk Requirements in Alternate Routing Trunk Networks," *Bell System Tech. J.*, Vol. 33 (March 1954), pp. 277-302.
5. Wilkinson, R. I. "Theories for Toll Traffic Engineering in the U. S. A.," *Bell System Tech. J.*, Vol. 35 (March 1956), pp. 421-514.
6. Feller, W. *An Introduction to Probability Theory and Its Applications* (New York: John Wiley & Sons, Inc., 1962).
7. Wilkinson, R. I. "Some Comparisons of Load and Loss Data with Current Teletraffic Theory," *Bell System Tech. J.*, Vol. 50 (Oct. 1971), pp. 2807-2834.
8. Hill, D. W. and S. R. Neal. "Traffic Capacity of a Probability-Engineered Trunk Group," *Bell System Tech. J.*, Vol. 55 (Sept. 1976), pp. 831-842.
9. Eisenberg, M. "Engineering Traffic Networks for More Than One Busy Hour," *Bell System Tech. J.*, Vol. 56 (Jan. 1977), pp. 1-20.

Chapter 8

Local Trunk Design

Direct, tandem, and intertandem trunks are the principal categories of local trunks configured into networks to handle local traffic such as that between end offices in a metropolitan area. The achievement of satisfactory performance requires that transmission objectives be established for such networks and that the trunk designs be carried out so that the transmission objectives are met.

Heretofore, the local portions of the network have been almost entirely separated from the toll portion. This separation evolved mainly from simpler local and toll traffic definitions of the past and the division of administration between the local and toll portions of the network, as well as the slightly different transmission considerations for local and toll trunks. In some cases, it has become advantageous to combine local and toll traffic trunk groups. Designs of trunks that may carry both kinds of traffic must follow the more stringent toll requirements specified in the via net loss (VNL) design plan covered in Chapter 9. Local trunks are designed to meet a fixed loss objective for each class of trunk.

The general relationships of trunks and loops in an overall connection, the inserted connection loss (ICL), the expected measured loss (EML), and the actual measured loss (AML) must be defined and then used in the specification of loss objectives. The general definitions and the overall philosophy of ICL, EML, and AML apply to all types of trunks. Finally, transmission designs and equipment selections must be considered.

8-1 RELATIONSHIPS OF TRUNKS AND LOOPS

A call may be routed over several possible paths between the originating switching office and the terminating switching office. The customer-to-customer connection shown in Figure 8-1 is one possible routing of a call; the connection includes two loops and two trunks in tandem and illustrates two-wire switching only. Many differences in detail are found in the telephone plant. The figure shows switching equipment at both ends of each trunk and transmission facilities between. A trunk circuit having relay equipment to signal and supervise the connection is associated with the switching machines at both ends of each trunk. Between the trunk circuits, the transmission facilities are composed of transmission equipment such as repeating coils, repeaters, four-wire terminating sets, etc., together with an associated cable pair or a carrier channel.

Signalling equipment, also an important trunk component, does not appear in Figure 8-1 because its location is difficult to generalize. In some cases, it may be a separate entity on the line side of the trunk circuit. In other cases, it is built around the four-wire terminating set, while in N1- or T1-type carrier systems it may be a part of the channel equipment.

The transmission characteristic of an overall customer connection is the sum of the characteristics of two loops, any trunks, and switching paths. As shown in Figure 8-1, the switching path in the originating office is not included in either the loop or trunk. By definition, a loop extends from the line terminals of the station apparatus to the line side of the switch. A trunk is defined as the communication channel between switching offices and extends from the outgoing side of the switch in the originating office to the outgoing side of the switch in the terminating office. Therefore, it includes the switching path of the terminating office, the office equipment at both ends, and the transmission medium and related equipment between the two offices. The outgoing side of the switch, mentioned above, is defined differently depending on the type of switching equipment as listed in Figure 8-2.

It is necessary to designate these specific switch locations because, in applying transmission objectives to individual trunks, it must be recognized that the characteristics of paths through the various switches can deteriorate overall transmission performance. Theoretically, performance may be controlled by applying transmission ob-

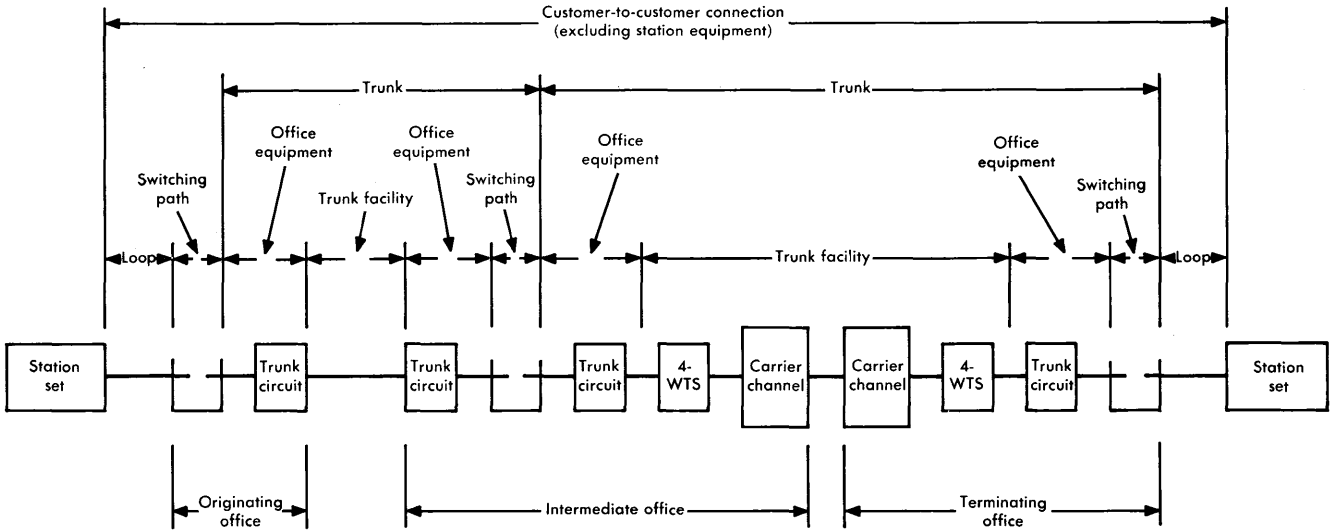

Notes:

1. Two-wire switching is shown.
2. Signalling equipment, not shown, may be associated with the trunk circuit, the four-wire terminating set, or the carrier channel unit.

Figure 8-1. Relationships of loops and trunks in a customer-to-customer connection.

TRUNK CONNECTION	TYPE OF SWITCHING EQUIPMENT	OUTGOING SWITCH LOCATION
At terminating office when connected to another trunk or at originating office	No. 4 crossbar	Outgoing link frame
	Crossbar tandem	Office link frame
	No. 1 crossbar	Office link frame
	No. 5 crossbar	Trunk link frame
	Step-by-step	Outgoing selector bank
	Panel	Office or district selector frame
	Manual switchboard	Outgoing trunk multiple
	ESS	Trunk switch frame
At terminating office when connected to a loop	Step-by-step	Connector bank
	No. 1 crossbar	Line link frame
	No. 5 crossbar	Line link frame
	Panel	Final selector frame
	ESS	Line switch frame

Figure 8-2. Outgoing switch locations for various types of switching equipment.

jectives to each trunk, where the trunk is defined to include one-half of the switching path at each end. From a practical standpoint, however, measurements of transmission characteristics would be difficult to make at the midpoints of switching paths. Accordingly, loss measurements are made between the outgoing side of the switch at one switching point and the outgoing side of the switch at the other switching point, thus including all of the switching path at the incoming end instead of half the switching path at both ends.

8-2 LOSS RELATIONSHIPS

If performance is to be satisfactory on multitrunk connections, the overall loss must be held to reasonable values which represent a compromise between transmission performance (adequate received volume, singing margin, echo, contrast, and noise) and circuit costs. The loss is allocated to the individual trunks in the overall connection as described in previous chapters. The previously defined losses (ICL, AML, and EML) are utilized to ensure that individual trunks are designed, installed, and maintained within allowable loss tolerances.

Inserted Connection Loss

The ICL of a trunk is the net 1000-Hz loss inserted between outgoing switch appearances by switching a trunk into an actual oper-

ating connection. Each trunk is designed and engineered so that the ICL objective is met for that particular trunk type. In Figure 8-3, the ICL is shown as the loss from the outgoing side of the switch of the originating office through the outgoing switch of the terminating office.

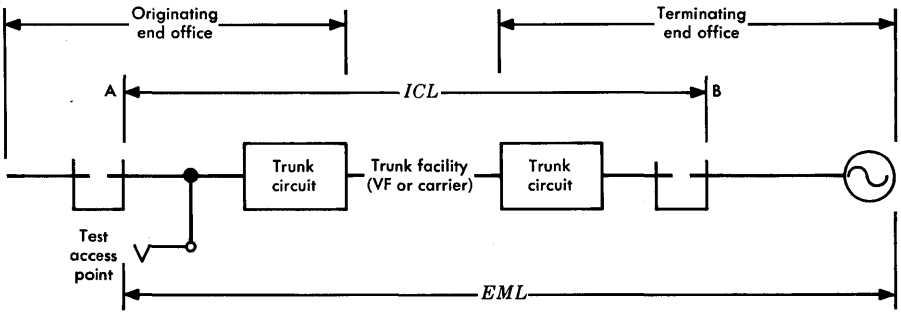

(a) Local direct trunk, EML ≈ ICL

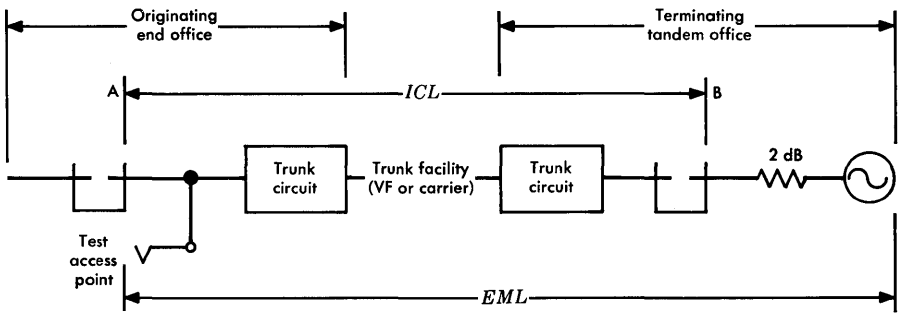

(b) Tandem trunk, EML = ICL + 2 dB

Figure 8-3. Relationships between ICL and EML.

Expected Measured Loss

The expected measured loss of a trunk is the 1000-Hz loss that is expected to be measured under specified test conditions. This loss is calculated by summing all gains and losses in the specified measuring configuration and is provided as a reference for comparison with actual measurements.

The EML includes access circuitry losses for connecting test equipment and may or may not equal the ICL. For many interlocal trunks, the test access arrangements contribute negligible additional loss and the EML is essentially the same as the ICL. If the test access loss is appreciable or if a significant portion of the trunk is omitted from the test, then the ICL does not equal the EML. While it is not practical to know the exact loss of all central office wiring, it is necessary to know the approximate values of these losses so that the EML can be more accurately calculated.

Depending on which test access points are used, the EML and ICL can differ in interlocal trunks. For example, in No. 5 crossbar offices, testing from the outgoing trunk testboard excludes the trunk circuit which typically has 0.5 dB loss. Testing from the master test frame, however, includes the trunk circuit. The EML then should be calculated on the basis of the same configuration as that in which the trunk is to be tested.

Where a switching machine handles both local and toll traffic, access for measurement to some tandem and intertandem trunks may be obtained through test pad arrangements which typically add 2 dB to the measured loss. Figure 8-3(b) illustrates a local tandem trunk to a tandem office which switches both toll and local traffic and the EML equals the ICL plus 2 dB.

Actual Measured Loss

The actual measured loss is the 1000-Hz loss measured by the proper test equipment with the proper measuring configuration. Upon installation, it must be compared to the EML to ascertain that the trunk meets the loss objective. Minor deviations exist between the AML and the EML due to discrete strapping capabilities of the various circuit devices used in the trunk, differences between average and actual central office cabling losses, differences between the average and actual test access losses, and the unpredicted interactive effects of the various parts of the circuit. If the AML does not fall within tolerable limits, the trunk must not be placed in service. Similarly, the subsequent periodic AML measurements made for maintenance purposes should be compared to the EML; differences should fall within maintenance limits or corrective actions should be initiated. These actions may include immediate removal of the trunk from service.

8-3 LOSS OBJECTIVES

Loss is one of the important parameters to be considered in trunk design since it affects such channel characteristics as received volume, echo, stability, noise, crosstalk, and signalling capability. In the practical administration of trunk losses, it must be recognized that some tolerance is needed in the design objectives. Expressing the objectives as a single value for each type of trunk is convenient for many purposes but it is not a realistic guide for the design and assignment of all classes of trunks. Consequently, some loss design objectives are expressed both as nominal values and as ranges of values. The ICL design objectives for local trunks are given in Figure 8-4.

TRUNK TYPES	INSERTED CONNECTION LOSS, dB	
	NON-GAIN	GAIN
Direct trunks*	0-5.0	3.0 (5.0 max.)
Tandem trunks	0-4.0	3.0 (4.0 max.)
Intertandem trunks		
Terminated at sector tandems at both ends.	—	1.5
Terminated in a toll center or sector tandem that meets terminal balance objectives at one or both ends.	—	0.5

*These ICLs apply to direct trunks less than 200 miles in length. Direct trunks more than 200 miles long are designed in accordance with the VNL plan.

Figure 8-4. Inserted connection loss objectives for local trunks.

If these objectives are adhered to in design and if installation and maintenance variations are kept within limits, satisfactory overall grades of service may be expected. These objectives have been selected as a compromise between high-loss requirements for singing, and crosstalk control and low-loss requirements for adequate received speech volume and minimum contrast. Deviation from these objectives causes degradation in transmission performance. Some trunks appear in more than one transmission category. For example, trunks which carry traffic directly from one office to another in one condition may in another condition be switched at the second office to a trunk in a

third office. Thus, such trunks can be in the direct category at times and in the tandem category at other times. In such multipurpose usage, the more stringent objectives apply.

8-4 TRANSMISSION DESIGN CONSIDERATIONS

The design of local trunks involves consideration of such factors as loss, signalling, stability, crosstalk, noise, and cost. These are interrelated in that a change in one may affect the others. To meet all the requirements, a sequential process is performed in which each step satisfies not only the requirement currently under consideration but also all previously considered requirements. This process may involve reconsideration of certain parameters which had been in limits but were placed out of limits by consideration of other parameters. Generally, a design which meets all requirements can ultimately be achieved.

Two-wire facilities are predominant in local trunking. Of course, the economical facility choice which meets the transmission objectives should always be used, whether it be two-wire VF, four-wire VF, or carrier. However, in the case of intertandem trunk design, four-wire facilities and intertoll-type trunk circuit relay equipment should always be used.

Another local design requirement which parallels the toll requirement relates to the improvement of return losses on two-wire tandem trunks. When E-type repeaters are used, they should be located at the end office or at an intermediate office, rather than at the tandem office, to achieve the highest possible tandem trunk return loss at the tandem office.

Loss

The ICL objectives of the various types of trunks are expressed as the insertion losses calculated and measured between specified impedances. The nominal impedance of most local trunks should be 900 ohms in series with 2.16 μF to match the impedance of the local offices. However, some tandem and intertandem trunks connect to 600-ohm tandem or high-volume tandem offices and thus should be designed for an impedance of 600 ohms in series with 2.16 μF. The 900-ohm value for local offices was selected because it approximates the impedance of H88 loaded cable circuits which are already widely

used for local trunks and it appears to be a reasonable compromise value representative of the distribution of loop input impedances.

Insertion loss values for various facilities and devices can be obtained in several ways. Manual computations can be performed by using basic equations and techniques [1]. While manual computations are cumbersome, they do provide a solution when no other alternative exists. For many designs, adequate data can be obtained by referring to published tables or handbooks which contain insertion loss values for various facilities terminated in various impedances. Finally, computer programs can be used for automated calculation of insertion loss, return loss, input and output impedances, and dc resistances for many complex combinations of facilities.

For voice-frequency facilities, including passive device losses, the difference between the line loss and the ICL is the amount of gain that must be inserted in the circuit. For example, consider the direct trunk in Figure 8-5. The line loss is 0.5 dB + facility loss + 0.5 dB. The 1000-Hz insertion loss of 48 kilofeet of 22-gauge H88 loaded cable pair between 900-ohm impedances is 7.2 dB, which exceeds the maximum objective for direct trunks without gain. Therefore, gain must be added. The ICL maximum objective for a direct trunk with gain is 3.0 dB. Thus, the amount of gain to be added at some point in the circuit becomes $(0.5 + 7.2 + 0.5) - 3.0 = 5.2$ dB. The most economical means of providing this trunk is probably on a two-wire facility using an E6 negative impedance repeater.

For carrier facilities, the ICL is attained by padding or otherwise offsetting the gain of the carrier system so that the overall trunk loss equals the ICL. Care must be taken to provide the standard input transmission level point at the carrier system as well as to provide the proper padding for establishing the desired ICL. Most carrier system outputs are at the standard +7 dB TLP and must be reduced to the −3 dB TLP by the combination of losses between the carrier system output and the outgoing switch appearance in order to achieve the ICL of 3 dB. This process is graphically illustrated in Figure 8-6. The losses between the output of the carrier system and the outgoing switch are composed of office wiring, the four-wire terminating set, and padding. The pads are available in small increments of loss such that the ICL can be achieved within acceptable tolerances. One major exception to this is the T1 carrier system when certain D1 channel banks are used. These channel banks were designed so that most cir-

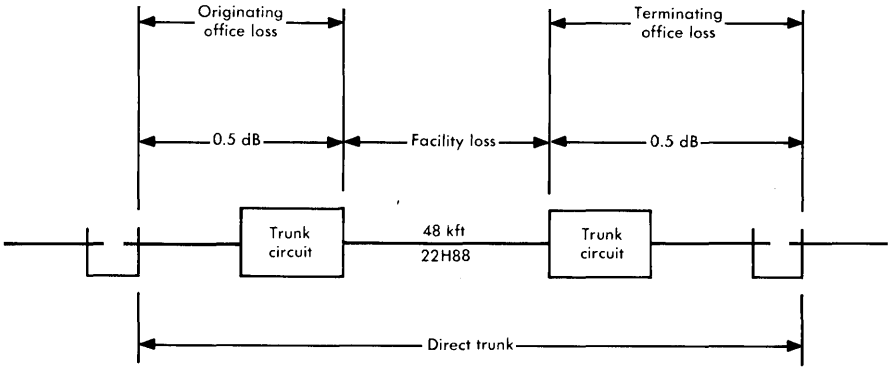

Figure 8-5. Elements of direct trunk loss.

cuit configurations using two-wire channel units have a limited number of fixed-loss values centered about 3 dB. Although four-wire E and M channel banks with external hybrids, pads, and/or signal convertors can be used for precise loss adjustment, the economic advantage of using the T1-D1 system is drastically reduced. Later designs of D-type banks can be arranged to produce trunk losses from 1 to 6 dB in 1-dB steps and have the additional capability of 0.1-dB steps of loss adjustment by means of attenuators to compensate for variations in office wiring losses [2].

In the trunk design process, the preliminary selection of a facility which meets the ICL objective is the first step. Other factors which must be considered are signalling limits, stability criteria, repeater gain, and the addition of circuit devices for miscellaneous purposes. These factors, including the ICL, are interrelated; as the requirements of each are satisfied, the effect on each of the others must be reviewed:

(1) Are signalling limits met by the selected facility?

(2) Does the addition of circuit devices affect ICL or signalling limits?

(3) Are stability criteria being met?

(4) Is the TLP at the repeater output held to an acceptable value from a crosstalk standpoint while circuit ICL requirements are met?

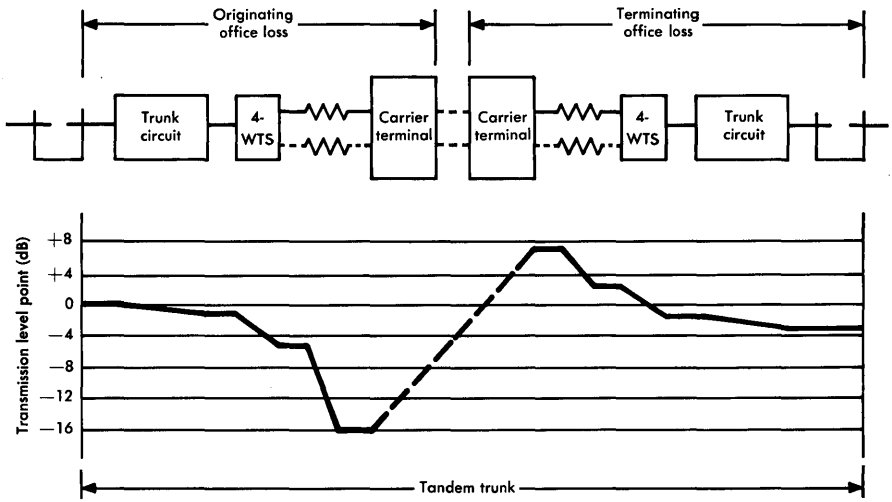

Notes:
1. Built-in signalling, two-wire switching, and −16 dB and +7 dB carrier system TLPs are assumed.
2. TLPs are shown for left-to-right direction of transmission

Figure 8-6. Typical direct trunk level diagram with use of carrier facilities.

Signalling and Supervision

In providing facilities and equipment for local trunks, it is necessary to consider not only the technical requirements for speech and data transmission but also the limits set by signalling. Each type of signalling has advantages and disadvantages that must be weighed in determining the equipment to be used. Factors include cost, signalling range, traffic necessities, facility compatibility, and the types of equipment already available or planned in each office. Many local trunks using metallic facilities are one-way (address signalling in one direction only) and make wide use of loop signalling techniques. In this case, it is necessary to calculate the loop conductor resistance between trunk circuits; the resistance of the medium (cable, load coils, etc.) and the resistance of all devices in the signalling path must be included. If the resistance exceeds the limit for the signalling equipment under consideration, range extenders (such as dial long trunk circuits), derived dc systems (such as SX, DX, or CX), or ac systems (such as SF or MF) must be used.

Loop conductor resistance, the round-trip resistance of the cable pair, and trunk circuit resistance limits stated in terms of loop conductor resistance may be found in references and can be directly compared. For dc signalling on four-wire VF trunks, each pair of wires may be used in parallel in the same manner as a single wire of a two-wire facility, as illustrated in Figure 8-7. For the same gauge pairs, the loop conductor resistance of the four-wire facility in a loop signalling configuration is half that of the two-wire facility and the maximum trunk length possible within the signalling limits is approximately doubled.

Where trunks are derived over carrier facilities, dc signalling must be converted to either an ac scheme or a digital scheme, as in a pulse code modulation (PCM) bit stream. If multifrequency (MF) signal-

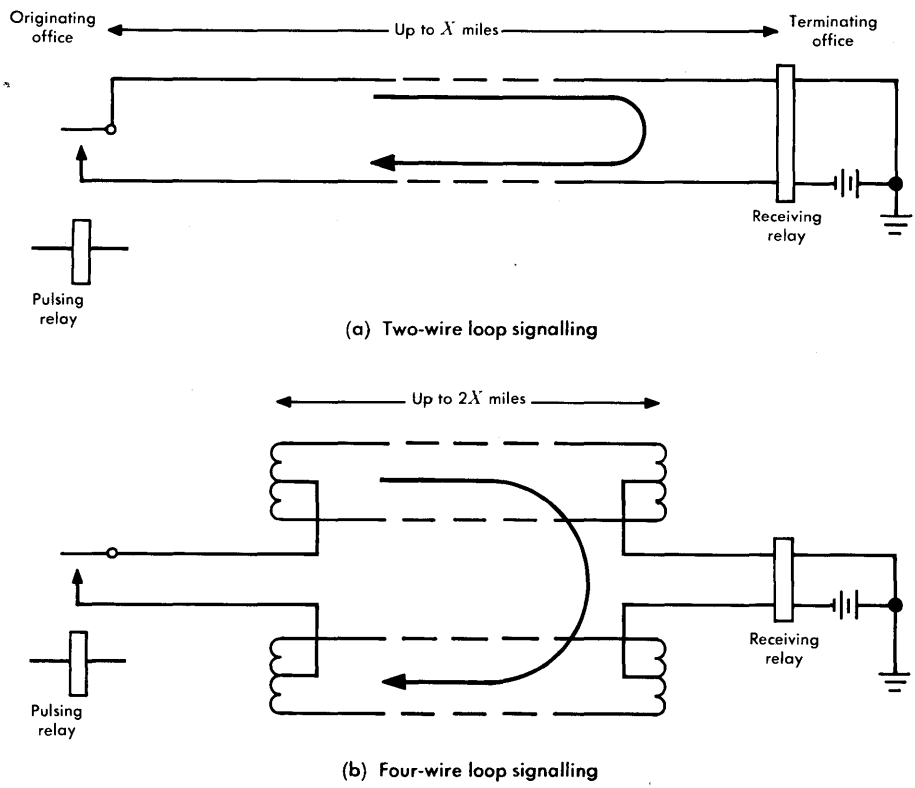

Figure 8-7. Loop conductor resistance for two-wire and four-wire signalling.

ling senders are available, the ac methods may be used for transmitting address signals. However, since MF transmits only address information, another arrangement, such as SF (in the case of carrier) or SF and dc (in the case of VF), must be provided for supervision. The amplitudes of the inband ac signals are sufficiently high to provide signalling over any length of trunk if it is properly designed, installed, and maintained; however, they are not so high as to overload carrier systems. Trunks that utilize dc supervision with MF signalling must meet the resistance limit for the type of dc equipment being used.

Generally, the range limit of the E and M leads from the trunk circuit to the external signalling device is 25 ohms, sufficient to extend across most offices. The associated external signalling arrangements and circuits may be dc or derived dc, SF units for ranges longer than can be provided by derived dc, or carrier channel units with built-in signalling. The E and M lead ranges should be checked in both transmitting and receiving directions as part of the trunk design. As an example of typical local trunk signalling, consider the trunk facility of Figure 8-8. Assume that revertive pulsing senders are used to signal directly over the trunk. Since the limit varies with the type of central office equipment and trunk circuit, assume for this example a typical limit of 2900 ohms between trunk circuits. The type of equipment and its range must be identified in each office and the list of ranges must then be made available for the trunk design. The loop conductor resistance in the example is:

21 kft of 22-gauge H88 loaded cable pair (33.9 ohms/kft)	712 ohms
E6 line build-out circuit (LBO)	25
Build-out resistance	0
E6 repeater gain unit	40
E6 line build-out circuit	25
Build-out resistance	0
27 kft of 22-gauge H88 loaded cable pair (33.9 ohms/kft)	915
Total resistance between trunk circuits	1717 ohms

In this example, the trunk facility is well within signalling limits and no additional signalling equipment is required; thus, the loss calculations previously performed remain valid.

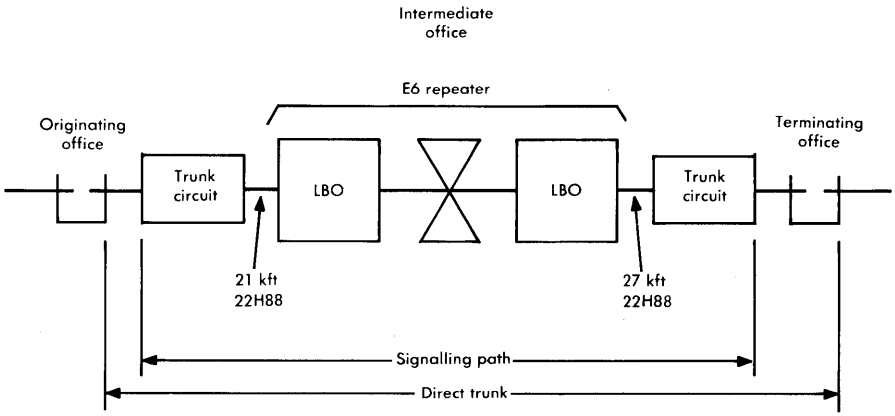

Figure 8-8. Signalling path losses.

Stability

The unstable network circuit condition known as singing is a sustained oscillation at some frequency where the algebraic sum of the losses in the circulating path are equal to zero or are negative and where phase relations are favorable to singing. These losses are the sum of the round-trip loss of the circuit plus the return losses at both ends at the frequency in question. In a telephone connection, singing is a trouble condition which must be avoided because it makes the connection unusable.

Near-singing distortion of transmitted speech signals occurs when losses in the singing path approach but do not equal the value required for sustained oscillation. This type of distortion may occur in two ways. Losses in the circulating path may be sufficiently low to cause an appreciable time interval to elapse before the circulating signals die away, thus causing speech transmitted through the network to sound hollow or reverberant. Also, successive trips of the multi-reflected signals around the circulating path may phase in and out with the impressed signal at various frequencies in the passband of the network causing successive peaks and valleys in the attenuation/frequency characteristic. As the singing margin is reduced, the peaks become higher and the valleys lower making speech sound more hollow.

It is logical, therefore, to use singing margin as a criterion for controlling both near-singing distortion and circuit instability. A design objective for repeatered VF trunks, based on loop terminations and average conditions of temperature, humidity, battery variations, etc., is a singing margin of 10 dB or more in 95 percent of all cases. Such trunks may have several circulating current paths; the singing margin objective applies to the most critical path, that is, the one nearest a singing condition. When this requirement is met, the chance of singing is practically precluded, even under the most severe operating conditions, and only rarely does near-singing distortion become troublesome. In addition to being stable in the connected condition, a circuit must also be stable in the idle condition, i.e., when the trunk is not switched into a connection. This is necessary to avoid excessive crosstalk and to render the circuit instantly usable.

To achieve the degree of stability which satisfies these requirements for a repeatered line, singing return losses are calculated for both idle and working combinations of conditions on each side of each repeater. The singing margin for the idle condition need be only a few dB. For a working trunk, the singing margin should be 10 dB or more. Terminal singing return losses (singing return losses at the trunk ends) for the idle condition without an idle circuit termination are assumed to be 0 dB and with an idle circuit termination are assumed to be 4.5 dB. Average terminal singing return loss for the talking condition is assumed to be 6 dB, a return loss value that may be considered to occur at a PBX, a central office switching point, and at a loop terminated by a telephone station set.

To determine the stability for a particular two-wire design, all significant singing return losses in each line section should be referred to the repeater location and combined. These singing return losses may include cable structural return loss, intermediate equipment return losses, loading irregularity return losses, junction return losses, and terminal return losses. For two-wire trunks, the calculated singing margin is the difference between the resultant singing return loss at each side of the repeater and the sum of the one-way gains for each direction of transmission through the repeater.

Figure 8-9(a) is a continuation of the direct trunk example. Assume that the load spacing is such that the structural return loss is 25 dB for the line section to A and 23 dB for the line section to B. Also assume that a loading irregularity at point C yields a 20-dB

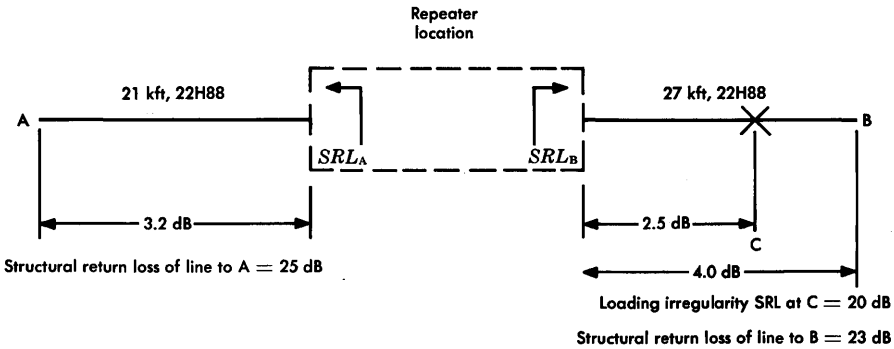

(a) Two-wire trunk

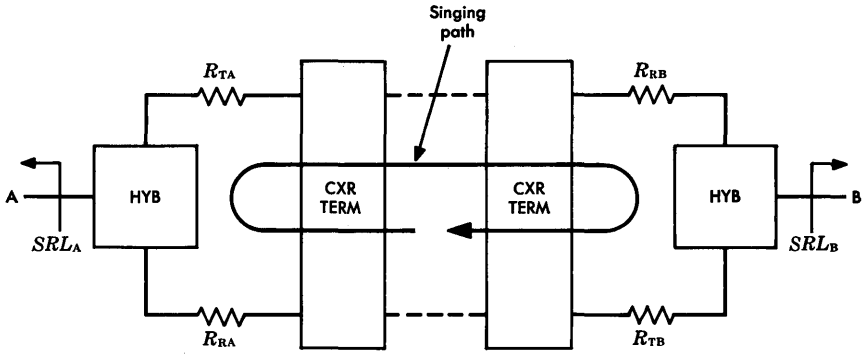

(b) Four-wire trunk

Figure 8-9. Trunk stability examples.

singing return loss. Singing return losses (SRLs) for an idle circuit (no idle circuit termination) and for a talking connection must be calculated. The idle circuit calculation is as follows:

Terminal SRL at A = 0 dB.

Insertion loss between A and the repeater = 3.2 dB.

Terminal SRL referred to repeater = 0 + (2 × 3.2) = 6.4 dB.

Structural return loss of line to A = 25.0 dB.

Combined on a power basis,
SRL_A = 6.4 "+" 25 = 6.3 dB.

Terminal SRL at B = 0 dB.

Insertion loss between B and the repeater = 4.0 dB.

Terminal SRL referred to repeater = 0 + (2 × 4.0) = 8.0 dB.

Structural return loss of line to B = 23.0 dB.

Loading irregularity in line to B
referred to repeater = 20 + (2 × 2.5) = 25.0 dB.*

Combined on a power basis,
SRL_B = 8.0 "+" 23.0 "+" 25.0 = 7.8 dB.

Repeater gain = 3.2 dB (from previous calculation). Thus,

$$\begin{aligned}\text{Singing margin} &= (SRL_A + SRL_B) - (2 \times \text{gain}) \\ &= (6.3 + 7.8) - (2 \times 3.2) \\ &= 14.1 - 6.4 = 7.7 \text{ dB.}\end{aligned}$$

A positive singing margin for this calculation indicates that this circuit should be stable in the idle conditon.

The singing return loss calculation for the talking connection follows:

Terminal SRL = 6 dB.

Insertion loss between A and the repeater = 3.2 dB.

Terminal SRL referred to repeater = 6 + (2 × 3.2) = 12.4 dB.

Structural return loss of line to A = 25.0 dB.

Combined on a power basis,
SRL_A = 12.4 "+" 25.0 = 12.2 dB.

Terminal SRL = 6 dB.

Insertion loss between B and the repeater = 4.0 dB.

Terminal SRL referred to repeater = 6 + (2 × 4.0) = 14.0 dB.

Structural return loss of line to B = 23.0 dB.

Loading irregularity in line to B
referred to repeater = 20 + (2 × 2.5) = 25.0 dB.*

Combined on a power basis,
SRL_B = 14.0 "+" 23.0 "+" 25.0 = 13.2 dB.

$$\begin{aligned}\text{Singing margin} &= (12.2 + 13.2) - (2 \times 3.2) \\ &= 25.4 - 6.4 = 19.0 \text{ dB.}\end{aligned}$$

*The effect of such an irregularity is normally included in the cable SRL. It is shown separately here to illustrate the effect.

Since the singing margin requirement in the talking condition is 10 dB, the calculated result shows satisfactory performance.

The above calculations are based on several assumptions which may not always be valid. For example, the calculations are based on the assumption that the critical frequencies on both sides of the repeater are the same and that phase relationships result in direct addition of return losses. Note that the singing return losses at 1000-Hz are referred back to the repeater. Although the 1000-Hz loss is probably different from the loss at the critical frequency, the singing return loss calculations of the idle circuit and talking conditions do provide a reasonable approximation of the singing margin. Measurements of the installed facility should be made, however, to verify that there is adequate stability margin.

For four-wire trunks between two-wire switching machines, the singing margin is the excess of losses over gains around the singing path. Figure 8-9(b) is a simplified example of a direct trunk on carrier facilities. The singing margin (SM) is then

$$SM = SRL_A + R_{TA} + R_{RB} + SRL_B + R_{TB} + R_{RA} + 4L_{HYB} - 2G_C \text{ dB}$$

where L_{HYB} is the transmission loss through the hybrid coils and G_C is the gain of the carrier system.

Crosstalk

Signals transmitted from repeaters into line facilities must be restricted in amplitude in order to limit near-end crosstalk interference with other circuits. Also, signals in repeatered line facilites must not fall so low that signal-to-noise ratios are unacceptable. The maximum TLP at a repeater output should not exceed +6 dB. At the input to a repeater, the TLP should be no lower than −9 dB when H88 loaded facilities are used or −15 dB when nonloaded facilities are used.

Figure 8-10 provides an analysis of compliance with the level point requirements for the direct trunk example. The critical locations for checking the transmitting and receiving level points are at all central offices through which the trunk passes. Clearly, the level points are consistent with the +6 dB and −9 dB limitations for loaded facilities. If all factors except the level point limitations are disregarded, the maximum gain on this trunk that could be allowed for a repeater

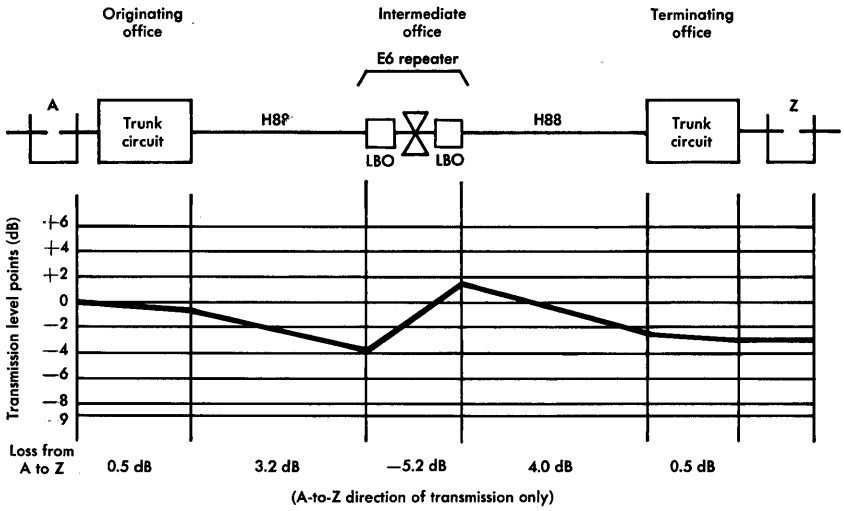

Figure 8-10. Level diagram for crosstalk considerations.

located in the intermediate office would be 3.7 + 6 = 9.7 dB. If the total gain requirement to meet the inserted connection loss objective exceeds the maximum for a single repeater at a particular location, consideration should be given to reassignment of the repeater to another point in the trunk (if possible), to the use of repeaters in two locations, to the reassignment of the trunk to coarser gauge cable, etc.

Level points must comply with requirements for both directions of transmission. In four-wire facilities, the gain settings may be different at a given repeater for opposite directions of transmission. In two-wire facilities, the level points also are not generally symmetrical.

REFERENCES

1. American Telephone and Telegraph Company. *Telecommunications Transmission Engineering,* Volume 1, Second Edition (Winston-Salem, N. C.: Western Electric Company, Inc., 1977), Chapters 3, 4, and 5.
2. American Telephone and Telegraph Company. *Telecommunications Transmission Engineering,* Volume 2, First Edition (Winston-Salem, N. C.: Western Electric Company, Inc., 1977), Chapter 21.

Chapter 9

Toll Trunk Design

The switched message network has been considered previously as composed of two main portions, local and toll. The toll portion is discussed in Chapter 1 in terms of the hierarchical arrangement of toll switching offices, the organization of trunk groups within the hierarchy, traffic considerations relating to the provision of trunk groups, the routing of traffic over these groups, and the toll connecting trunks that interconnect the toll and local portions of the network.

Toll trunks thus fall into two general classifications for which the transmission objectives and designs are somewhat different because of the manner in which the trunks may be utilized. The first of these classifications, intertoll trunks, is used to interconnect toll switching offices. The second classification, toll connecting trunks, is used to provide connections between toll and local portions of the network. These two classes of trunks are considered separately because of the differences in function and applicable objectives.

End office toll trunk groups may be established between a class 5 office and any distant office that performs class 4 or class 5 functions. Since such trunks do not fit either of the more general classifications, the objectives for these trunk types are discussed separately. Where both ends of these trunks terminate at class 5 offices, they are called end-to-end toll trunks.

Most of the toll portion of the network operates on the basis of transmitting analog and digital signals over analog transmission facilities. With the introduction of the No. 4 Electronic Switching System (No. 4 ESS), a time division switching system, digital trans-

mission of all types of signals can be carried through the switching machine without being put through analog signal transformations. Analog trunk transmission objectives must conform to the previously discussed via net loss (VNL) transmission plan if noise, loss, and echo objectives are to be met. Digital trunks must be designed to a fixed loss plan. In many cases, compromise objectives must be met where analog and digital modes of operation intersect [1]. In all cases, echo and singing return loss objectives must be considered in trunk design and these impairments must be controlled. In addition, address and supervisory signalling requirements must be satisfied.

The selection of equipment to provide signalling and supervision depends largely upon the types of switching machines involved and on the type of facility. The process of selection for analog toll trunks is similar to that for local trunks as covered in Chapter 8. Multifrequency pulsing is the predominant mode of signalling on these toll trunks. The Common Channel Interoffice Signalling (CCIS) System is commonly used for trunks operating between No. 4 ESS machines and it is being applied increasingly for trunks between other types of stored program controlled machines. Most intertoll trunks and many toll connecting trunks are long enough to make carrier transmission facilities the economic, if not the only practical, choice. The use of carrier facilities leads to the utilization of single-frequency signalling units for supervision and for dial pulse signalling.

9-1 TRANSMISSION OBJECTIVES

Toll trunks are designed to meet transmission objectives for loss, noise, and echo. In addition, trunk gains and losses are controlled by well-defined transmission level points which must be established in order to control signal amplitudes and signal-to-noise performance. These objectives are reviewed to provide perspective for the discussion of toll connecting and intertoll trunk design.

Loss Evaluation

Losses are allocated to various types of analog trunks in the switched message network according to rules that are well defined in the VNL and toll switching plans. These are the losses that are incurred when the trunks are inserted in a connection. However, these loss values in the connection may differ significantly from measured values because of test arrangements that have been provided to facilitate test procedures.

The definitions of trunk losses given in Chapter 8 (inserted connection loss, expected measured loss, and actual measured loss) apply to the toll portion of the network as well as to the local portion. Briefly, the inserted connection loss (ICL) of a trunk is the 1000-Hz loss that is inserted between outgoing switch appearances when the trunk is switched into a connection. The expected measured loss (EML) of a trunk is a computed value which includes the inserted connection loss and the losses of switched pads, test pads, or test hybrids present during the measurement. If there are no pads in the test connection, the expected measured loss is equal to the inserted connection loss. The actual measured loss (AML) is the 1000-Hz loss measured between the same two points as those for which the EML has been computed.

The difference between the EML and the ICL is called the effective testing loss. It includes the losses of test pads, test hybrids, and switch pads that may be used at the two ends of the trunk under test. In some cases, test pad or test hybrid losses are established to compensate for pads used in the trunks (called A pads) which may be switched out of the trunk during testing. This is done so that the effective testing loss may be held constant for a particular class of trunks.

Administration of Loss Objectives

In order to ensure that a toll connection may have the minimum possible loss consistent with satisfactory echo performance, loss is allocated among analog trunks according to VNL criteria. Intertoll trunks should be designed to have an ICL of VNL dB and toll connecting trunks should be designed to VNL + 2.5 dB. Maximum values have been established to control overall connection losses. The loss objectives for various types of analog toll trunks are summarized in Figure 9-1 in terms of ICL.

In the practical administration of trunk losses, some tolerance is needed in the design objectives. The expression of objectives as a single value for each type of trunk is convenient for many purposes but is not realistic for all classes of trunks. Consequently, as can be seen in Figure 9-1, some design loss objectives are expressed both as single values and as ranges of values.

Analog Toll Connecting Trunks. The normal loss objective for toll connecting trunks is VNL + 2.5 dB (maximum 4.0 dB). For toll con-

TRUNK TYPE	LENGTH, miles	LOSS OBJECTIVE, dB	
		WITHOUT GAIN	GAIN OR CARRIER
Toll Connecting	<200	2.0-4.0	3.0 (max. 4.0)
Toll Connecting	200-735*	—	VNL + 2.5 (max. 4.0)
Intertoll			
Final group	<765*	—	VNL (max. 1.4)
High-usage or grade-of-service group	≦1850	—	VNL (max. 2.9)
High-usage or grade-of-service group	>1850	—	0†
Class 1 to class 1 (RC-RC)	All	—	VNL or 0†
Secondary intertoll	All	0.5	0
End office toll			
Class 5 to class 5	<200	—	6.0
Class 5 to class 5	≧200	—	VNL + 6.0 (max. 8.9)
Class 5 to class 4,3,2,1	<200	2.0-4.0	3.0 (max. 4.0)
Class 5 to class 4,3,2,1	200-1850*	—	VNL + 2.5 (max. 5.5)
Class 5 to class 4,3,2,1	>1850	—	3.0‡

*Maximum lengths permitted by loss objectives.

†Where loss is shown as 0 dB, echo suppressors are used.

‡Echo suppressor used.

Figure 9-1. Analog toll trunk inserted connection loss objectives.

necting trunks less than 200 miles long on carrier facilities or less than 15 miles long on voice-frequency facilities, alternative objectives are applicable. For the VF facilities without gain, a loss of 2.0 to 4.0 dB is acceptable. For VF facilities with gain or for carrier facilities, the objective is 3.0 dB; however, a loss of up to 4.0 dB is acceptable on the VF facility before an additional gain device must be added.

A minimum ICL of 2.0 dB is acceptable for very short toll connecting trunks without gain. These are trunks which are intrabuilding or between adjacent buildings.

Analog Intertoll Trunks. In the network plan for distance dialing, a number of intertoll trunks may be used in tandem to complete a connection. For this reason, the losses allocated to various intertoll trunks

are the lowest of those shown in Figure 9-1. Note that the loss allocated to final trunk groups is VNL with a maximum of 1.4 dB per trunk. This low allocation has been made because final trunks are those that may be used in connections containing the largest number of tandem trunks.

Note also in Figure 9-1 that high-usage or grade-of-service groups longer than 1850 miles and most groups that interconnect regional centers are operated at 0 dB loss. This is made possible by the use of echo suppressors on these trunks. Echo suppressors are not used on trunks that interconnect regional centers that are in near proximity. This exception applies where the maximum round-trip delay between end offices served by the two regional centers does not exceed 45 milliseconds. The trunks which do not require echo suppressors are designed to operate at VNL.

Analog End Office Toll Trunks. Any two end offices may be interconnected by direct trunks which permit connections to be established without being switched through the more complex local or toll portions of the network. When these trunks interconnect two end offices in separate local areas for which toll rates apply, the trunks are called end-to-end toll trunks. Similarly, an end office may be connected by a trunk group to a class 4 or higher office other than its normal serving office. These trunks are called class 5 to class 4 or higher end office toll trunks. Losses are allocated differently to these two types of trunks.

End-to-end toll trunks are designed according to VNL criteria. The ICL should be VNL + 6.0 dB with a maximum of 8.9 dB regardless of length. Trunks of this type 200 miles or less in length may be designed to a fixed loss of 6.0 dB.

Where justified by traffic and economic considerations, it may be desirable to provide high-usage trunks from an end office to a toll office other than its normal serving toll office. The ICL objective for trunks of this type up to 200 miles in length is the same as normal toll connecting trunks. For trunks between 200 and 1850 miles in length, the loss objective is VNL + 2.5 dB with the maximum extended to 5.5 dB. This extension is not a relaxation of maximum loss objectives since it merely recognizes that there are two or more trunks in the final route as compared to only one in the high-usage route. Therefore, the high-usage route can be permitted to have a

loss equivalent to that of two trunks in the final route. Trunks long enough to exceed the 5.5 dB maximum (1850 route miles) should be equipped with echo suppressors and assigned a 3.0 dB ICL. There is no danger that two echo suppressors would be used on a connection since traffic routing rules specify that these trunks are permitted to switch only to an office homing on the distant toll office.

Transmission Level Points

The transmission level at any point in a trunk is defined as the design gain or loss expressed in dB, between that point and an arbitrary point called the zero transmission level point (0 TLP). Transmission level points have meaning only for a single trunk and are not defined for a built-up connection of trunks. The outgoing switch in a class 5 office at the originating end of a direct or toll connecting trunk is defined as a 0 TLP. The outgoing switch in an analog class 4 or higher office at the originating end of either a toll connecting or intertoll trunk is conveniently designated as a —2 dB TLP. Other standard and defined transmission level points include the voice-frequency input and output of a carrier channel which have been standardized as —16 dB and +7 dB TLPs, respectively. The 0 TLP at the class 5 office and the —2 dB TLP at the analog toll office result in 0 dB and 2 dB effective testing losses (test pad values), respectively. For symmetry, the loss between test access points is 2 dB from transmitting and receiving test equipment at toll offices. Because of the test access losses, EML = ICL + 2 dB for toll connecting trunks and EML = ICL + 4 dB for intertoll trunks. As previously mentioned, the introduction of digital switching of toll trunks requires changes in trunk losses and in the specification of TLPs.

Noise Limits

Noise limits for all classes of trunks are given in Figure 9-2. The values have been adjusted for practical maintenance considerations and stepped into mileage bands to simplify administration. The circuit order and maintenance limit and the immediate action limit are respectively about two and three standard deviations greater than the mean values that represent the capability of present facilities. If the noise on a trunk exceeds the immediate action limit, the trunk must be removed from service until corrective action is taken.

Return Loss and Balance

Via net loss design assumes that the lowest echo return losses in a connection are encountered at class 5 offices because of the generally poor impedance match between toll connecting trunks and local loops. Since additional reflections would further degrade performance, it is necessary to constrain all intermediate reflections in connections between class 5 offices. Since the same techniques are effective in controlling both echo and singing, balancing procedures involve meeting requirements for singing point or singing return loss as well as for echo return loss. These procedures are based on improving the impedance match at critical points in the network.

Through Balance. Since all intertoll trunks are designed on a four-wire basis, intermediate echoes are prevented except where it is necessary to convert to two-wire transmission. For example, many toll offices use two-wire switching machines and, therefore, require hybrids to effect the necessary four-wire to two-wire conversions. When intertoll trunks are switched together by a two-wire switching system, it is necessary that the impedances of all the trunks and the impedances of all the possible paths through the switching machine be very nearly the same in order to prevent objectionable echo. The procedure for effecting this impedance control is called through balancing.

The through balance requirements are given in Figure 9-3. A trunk which does not initially meet minimum requirements should not be turned up for service; subsequently, any trunk that has a measured return loss below the turndown limit should be removed from service.

Terminal Balance. Via net loss operation of trunks is based on sufficiently low echo magnitudes on all DDD connections. This requires adequate balance at all points where trunks are switched together as well as control of echoes on two-wire toll connecting trunks. As explained previously, where two intertoll trunks are switched together, the impedance match is called through balance. Where an intertoll trunk is connected to a toll connecting trunk, the impedance match is called terminal balance. Terminal balance testing is required in every two-wire and four-wire toll switching office at which toll connecting trunks terminate. Terminal balance requirements are given in Figure 9-4.

LIMITS, dBrnc (AT POINT OF MEASUREMENT)	VOICE FREQUENCY	CARRIER OR MIXED FACILITIES, miles								
		0 to 15	16 to 50	51 to 100	101 to 200	201 to 400	401 to 1000	1001 to 1500	1501 to 2500	2501 to 4000
NONCOMPANDORED	36 / 20	36 / 28	36 / 28	36 / 29	36 / 31	40 / 33	40 / 35	40 / 36	44 / 39	46 / 41
COMPANDORED	NA	30 / 23	30 / 23	30 / 24	30 / 26	34 / 28	34 / 30	34 / 31	40 / 34	40 / 36

B

A

B = Immediate action limit

A = Circuit order and maintenance limit

Figure 9-2. Noise limits for toll trunks.

TYPE OF REQUIREMENT	MEDIAN, dB	MINIMUM, dB	TURNDOWN LIMIT, dB
Echo return loss	27	21	18
Singing point or singing return loss	20	14	11

Figure 9-3. Through balance requirements.

Figure 9-5 shows the various connections involved in terminal balance. Terminal balance tests are made from an intertoll trunk through the switch to a toll connecting trunk and through the distant class 5 office to a balance termination of 900 ohms in series with 2.16 μF. Thus, three factors may affect terminal balance: the impedance match in the toll office, irregularities in the two-wire toll connecting trunk facility, and the impedance match at the class 5 office balance termination.

In a two-wire toll office, the interface between the switch and the toll connecting facility is nominally a fixed impedance of 900 ohms in series with 2.16 μF. Echo control is accomplished by controlling the length variability of the two-wire path between the intertoll hybrid and the fixed impedance point. In electro-mechanical switching machines, drop build-out capacitors are sometimes used on the shorter paths to control the variability. In No. 1 ESS offices, there is no provision for drop build-out, and cabling limits must be closely observed.

In a four-wire switching office, if the toll connecting facility is also four-wire, the only source of echo is the four-wire to two-wire hybrid conversion at the class 5 office. However, if the toll connecting trunk is two-wire, there is a source of echo at the hybrid between the trunk and the four-wire switching machine. This echo is controlled by the use of a precision network, shown in Figure 9-5, that matches the impedance of the two-wire cable facility as closely as possible.

The precision network can provide an impedance match over the nominal voiceband; however, mismatches may exist at frequencies above the nominal voiceband. To eliminate the possibility of singing at some frequency above the voiceband, a low-pass filter should be used, as shown in Figure 9-6, whenever a path with net gain and an insufficient low-pass filtering characteristic may exist between the two-wire sides of the two hybrids in the overall connection.

TYPE OF FACILITY	ECHO RETURN LOSS, dB			SINGING POINT OR SINGING RETURN LOSS, dB		
	MEDIAN	MINIMUM	TURNDOWN LIMIT	MEDIAN	MINIMUM	TURNDOWN LIMIT
Two-wire facilities (interbuilding) or four-wire facilities with two-wire extensions (interbuilding)	18	13	10.5	10	6	4
Two-wire facilities with 2-dB pad (intrabuilding)	22	18	10.5	14	10	4
Four-wire facilities (see note)	22	16	10.5	15	11	4

NOTE: For four-wire facilities equipped with E-type signalling units which have built-in four-wire terminating sets with fixed NBO capacitor, the interbuilding two-wire requirement is used.

Figure 9-4. Terminal balance requirements.

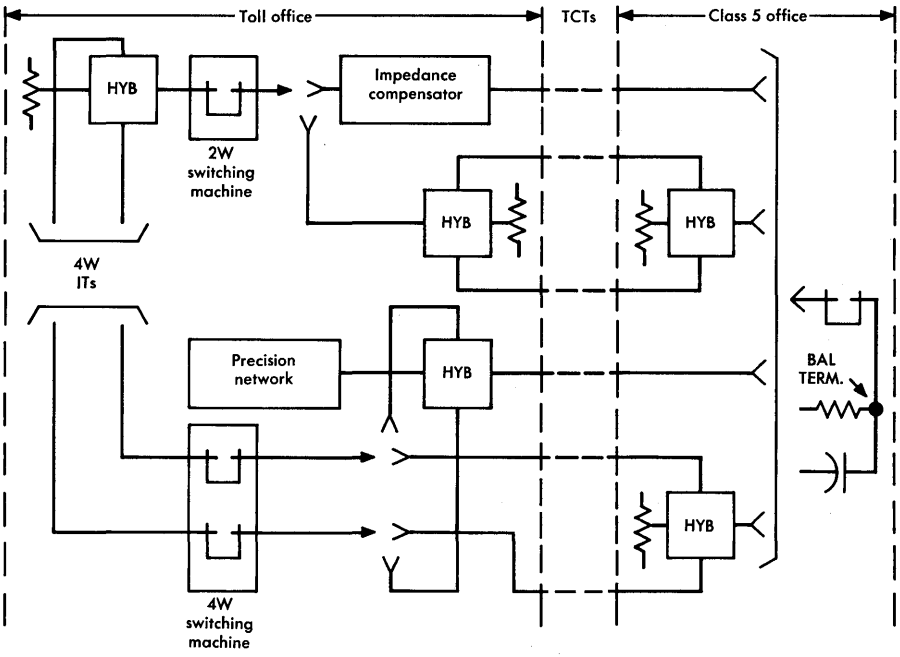

Figure 9-5. Terminal balance arrangements.

Impedance irregularities in the loaded cable pair are also a source of echo in a two-wire facility; thus, it is necessary to limit variations in load coil spacing and to avoid conductor gauge changes. A structural return loss measurement is made as part of acceptance testing of loaded cable to determine whether echo control is adequate. For a loaded two-wire facility, the electrical length of the end section must be adjusted to match as closely as possible the impedance of the balance termination.

The hybrid balancing network at the class 5 end of a four-wire toll connecting trunk must match the balance termination of 900 ohms in series with 2.16 μF combined with the impedance of the cabling through the switch between the hybrid and the termination.

Analysis of Performance. An evaluation of the adequacy of balance requirements and the effects of these requirements on toll trunk design may be made by examining a specific network connection. The connection to be analyzed is shown in Figure 9-7.

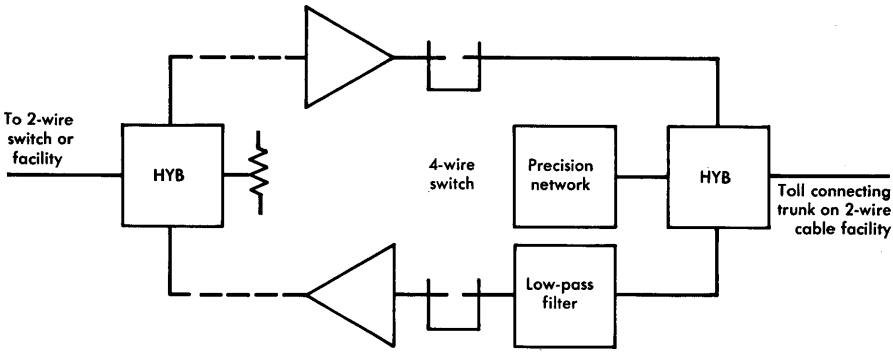

Figure 9-6. Application of precision network and low-pass filter.

In the VNL plan for network operation, sufficient losses are assigned to toll connecting and intertoll trunks to suppress talker echo to acceptable values. It is assumed that the only echoes that must be so controlled are those that originate at the interface between the loop and the toll connecting trunk at the distant class 5 office. To justify this assumption, other sources of echo must be considered. These sources are shown in Figure 9-7 along with the echo paths from the sources to the talker. The return loss value shown at the B end class 5 office is assumed as a result of comprehensive studies. Return losses shown at the other offices are the result of meeting balance requirements.

In order to simplify the analysis, a number of assumptions are made. Assume that the two toll connecting trunks are identical and short enough so that VNL + 2.5 = 3 dB and that the connection between the two class 4 offices is made up of three four-wire intertoll trunks whose ICLs are 1.4, 2.6, and 1.4 dB, respectively. Next, assume that each echo return loss is equal to the median value.

Now, consider the equivalent values of these return losses as referred to the class 5 office at the A end of the connection. For convenience, the four return losses are designated L_{3A}, L_{3B}, L_{4B}, and L_{5B}. The translation of these return losses involves the determination of round-trip path loss for each echo; i.e., twice the sum of the inserted connection losses between the echo sources and the A end must be

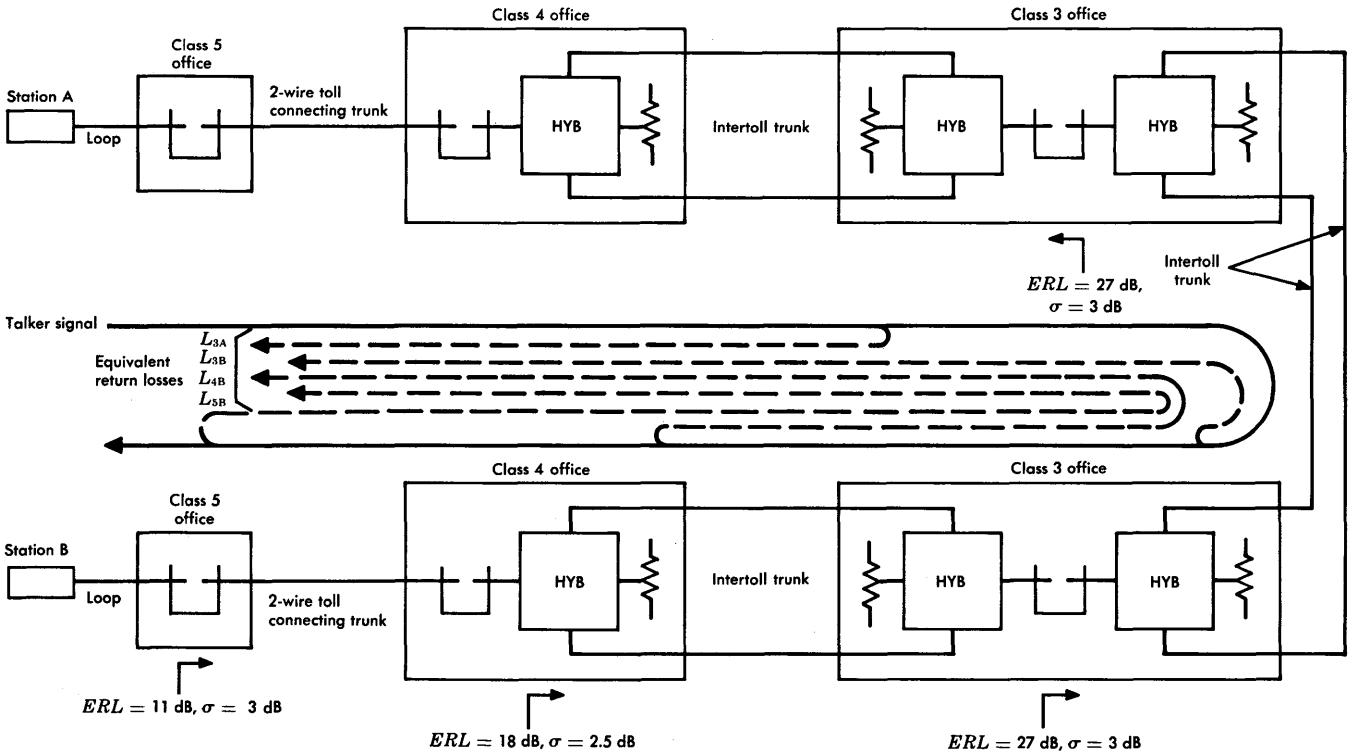

Figure 9-7. Echo return losses in a network connection.

added to the return losses. Thus, the equivalent return losses referred to the class 5 office at the A end are:

$$L_{3A} = 27 + 2(1.4 + 3.0) = 35.8 \text{ dB}$$

$$L_{3B} = 27 + 2(2.6 + 1.4 + 3.0) = 41.0 \text{ dB}$$

$$L_{4B} = 18 + 2(1.4 + 2.6 + 1.4 + 3.0) = 34.8 \text{ dB}$$

$$L_{5B} = 11 + 2(3.0 + 1.4 + 2.6 + 1.4 + 3.0) = 33.8 \text{ dB}.$$

Within a few dB, the four sources of echo appear to be nearly equal in terms of echo return loss values referred to the A end of the circuit. For the echoes under consideration, the time delays are likely to be significantly different and since little is known about the subjective effects of multiple echoes, the total interfering effect cannot be evaluated. Therefore, consider the relations between the echo return losses at the toll offices, L_{3A}, L_{3B}, and L_{4B}, and that at the distant class 5 office, L_{5B}.

The return loss, L_{3A}, has nearly the same value as that of the end office, L_{5B}. However, the class 3 office is much closer to the A end of the connection. The short echo delay would make the echo from the class 3 office much less annoying than that in the distant class 5 office. Thus, while a quantitative evaluation of the interfering effect of the two echoes cannot be given, it seems reasonable that performance would not be significantly degraded by the echo from the class 3 office.

The echo from the other class 3 office is more than 7 dB lower than that from the B end office. While the delays of these two echoes are more nearly alike, the lower amplitude of the echo from this class 3 office would add less than 1 dB to the interfering effect even if the two echoes were combined on a power basis.

It is concluded, then, that the echoes from the class 3 offices do not significantly degrade the echo performance of the connection. It thus appears that the through balance requirements of 27-dB echo return loss at these class 3 offices result in an adequately low echo. If there are additional two-wire offices in the connection, performance may become marginal. However, most class 1 and 2, and many class 3 offices are four-wire and the likelihood of having additional two-wire offices in the connection is remote.

Finally, relate the terminal return loss performance of the distant class 4 office, L_{4B}, to that at the B end class 5 office, L_{5B}. These two

values are nearly the same and, since the toll connecting trunk is assumed to be short, the delays are about equal. Thus, the two echoes may add (presumably by power) and result in an effective echo return loss of about 31 dB referred to the class 5 office at the A end of the connection. While network echo performance is generally regarded as satisfactory, this result indicates the possible desirability of increasing the loss of toll connecting trunks, of making the terminal balance requirements for two-wire toll offices more stringent, or of increasing the use of four-wire toll connecting trunks. Where four-wire trunks are used, the terminal balance requirement is increased from 18 to 22 dB. This increase results in the equivalent return loss from the distant class 4 office (L_{4B}) being 5 dB higher than that from the B end class 5 office (L_{5B}). This value causes only small degradation of overall performance.

This illustration of return loss relationships shows the importance of meeting and maintaining balance requirements. In practice, much more complex relationships exist. In the illustration, mean values are used throughout but it must be remembered that each distribution has a substantial standard deviation and that values of delay vary widely from connection to connection. Economic pressure has tended to make the use of two-wire toll connecting trunks attractive but the costs of short-haul carrier facilities for toll connecting trunks are being reduced which makes the long-term objective of a median 22-dB return loss at class 4 offices appear achievable. The high variability of loop impedances and the high cost of reducing that variability make it desirable to continue to allocate most of the requirement to the class 5 offices.

Facility Selection

A number of precautions should be observed in the selection of toll trunk facilities so that transmission objectives may be met for both voice and data. These precautions pertain generally to the use of carrier systems and channels.

Toll trunks should be assigned, wherever possible, to channels in the multiplex equipment where performance is not significantly affected by band-edge attenuation/frequency and delay distortions. Such distortions may accumulate due to the tandem connection of toll trunks. Band-edge channels in the multiplex may be used for other purposes. The number of carrier channels in tandem in a single trunk should be as few as possible and not exceed three.

The use of compandored systems should be limited in the network. Normally, only one compandored facility should be included in any trunk and compandored facilities should not be used on trunks interconnecting class 1 and class 2 offices.

9-2 ECHO SUPPRESSORS

Echo magnitude can be reduced by increasing the transmission losses in the connection; however, the added loss also reduces the volume of received speech. Therefore, echo suppressors are used on connections where the amount of loss needed for echo control would be excessive. Basically, an echo suppressor is a pair of voice-operated switches which insert a high loss (35 dB or more) into the echo return path when speech energy is present in the direct path.

Types of Echo Suppressors

Figure 9-8 is a block diagram showing two echo suppressors inserted at the terminals of an intertoll trunk. This configuration is known as a split terminal echo suppressor because each suppressor provides suppression for one talker only and because there is one at each terminal of the intertoll trunk. Speech energy from A is detected by the echo suppressor at the B end of the trunk. The echo suppressor then switches the loss L_B into the path from B to A to suppress the

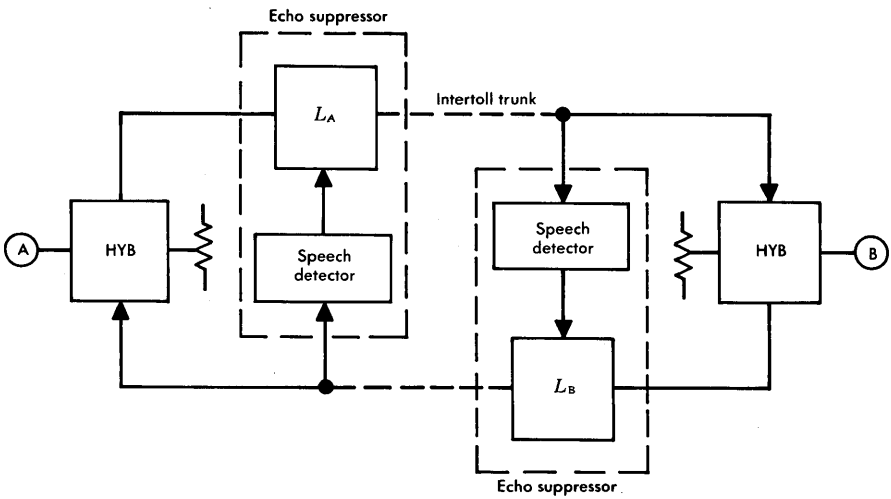

Figure 9-8. Intertoll trunk with split terminal echo suppressors.

echo generated at the B end of the trunk. The echo suppressor at the A end provides the same function for the speech signal from B. Threshold circuits determine the sensitivity of the echo suppressor detection circuitry. The sensitivity is adjusted so that the echo suppressor does not operate in response to normal circuit noise but does operate on speech energy.

The full terminal echo suppressor, shown in Figure 9-9, provides suppression for both directions of transmission at one terminal. The portion of the device which suppresses echoes from A is essentially the same as the split echo suppressor. The portion which suppresses echoes from B is different in that it must be adjusted to account for the delay of the echo in the intertoll trunk in addition to the delay in the toll connecting trunk and loop.

Intertoll trunks equipped with echo suppressors sometimes carry data signals. Some data sets require the ability to transmit and receive signals simultaneously. Therefore, a tone-operated disabler is used to prevent suppressor operation. When the called data set goes off-hook, it transmits a single-frequency signal in the range of 2000 to 2200 Hz for at least 400 milliseconds. The disabler, which is bridged across the transmission paths in the echo suppressor, recognizes the tone and operates a relay to disable echo-suppressor operation. The suppressor continues to be transparent to line signals

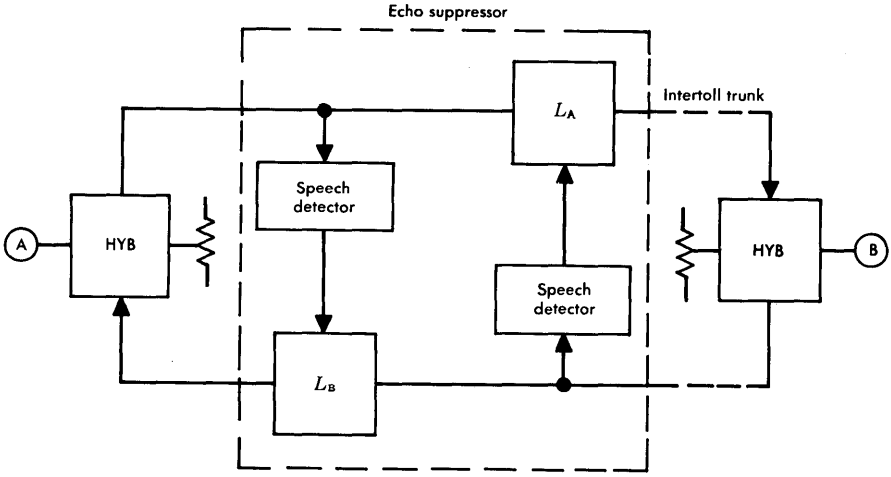

Figure 9-9. Intertoll trunk with full terminal echo suppressor.

as long as data is being transmitted. If the data signal ceases for a 100 millisecond or greater period, the suppressor reverts to normal operation. The frequency selectivity and pickup time of the disabler guard against false disabler operation by speech.

Application of Echo Suppressors

Proper application of echo suppressors involves a number of problems that must be carefully considered. First, the multilink connections that may have loss or delay conditions that require echo suppressors must be determined. In addition, echo suppressors must be located so that only one full or two split suppressors are in any connection. Finally, the proper echo suppressor and associated circuit adjustment options must be selected for the variety of conditions that may be encountered on switched connections.

In the network plan for distance dialing, echoes on connections in which the echo path delay exceeds 45 milliseconds must be controlled by echo suppressors. Intraregional connections do not require echo suppressors because the maximum intraregional round-trip delay does not exceed the 45-millisecond limit. However, interregional trunks are equipped with echo suppressors when the round-trip delay in interregional calls using these trunks may exceed the limit.

Selection of Trunks Requiring Echo Suppressors. There are two categories of interregional trunk groups, regional center-to-regional center final groups and high-usage interregional groups. The latter category includes interregional grade-of-service groups. Usually, trunks between regional centers require echo suppressors and interregional high-usage trunks do not. However, there are exceptions in both cases depending on the loss and delay involved [2].

Regional Center-to-Regional Center Trunks. The round-trip echo delay between any toll office and the most distant end office in the final routing chain is called end delay for that toll office. The end delay for a regional center can be as great as 22.5 milliseconds. Thus, a call routed from one regional center through another may encounter a 22.5-millisecond end delay in each region or a combined end delay of 45 milliseconds without allowing for any delay in the interregional trunk. For that reason, most interregional trunks should be equipped with echo suppressors. Exceptions are interregional trunks with very short delays between regions that are very compact geographically.

Interregional High-Usage Trunks. The end delay from lower-class toll offices is less than that from regional centers. Thus, in determining the need for echo suppressors on high-usage trunks, it is common practice to assume 10 milliseconds as the maximum end delay since at least one end of each high-usage trunk terminates below the regional center in the hierarchy. Thus, echo suppressors should be used on all high-usage trunks having round-trip delays of 25 milliseconds or more. This delay corresponds to a VNL of 2.9 dB.

Assignment of Types of Echo Suppressors. The type of echo suppressor assigned depends on the length and type of trunk. Full echo suppressors of early design can be used on trunks between 1850 and 2500 miles long.

Full echo suppressors of late design can be used on any terrestrial trunk less than 3800 miles long. This includes any terrestrial trunk in the continental United States, Canada, and Mexico. For trunks longer than 2500 miles, full echo suppressors of the latest design or split echo suppressors must be used. Split echo suppressors can be used on all trunks requiring echo suppressors.

Loss on Trunks Equipped with Echo Suppressors. On trunks equipped with echo suppressors, suppression loss controls echo. As a result, stability, noise, and crosstalk are the controlling trunk loss considerations. None of these requires loss on a trunk using all four-wire facilities between toll offices. Therefore, intertoll trunks with echo suppressors should be designed with an ICL of 0 dB or as close to this value as possible.

End office toll trunks more than 1850 miles long between class 5 and class 4 or higher offices should be designed with echo suppressors and an ICL of 3.0 dB. The fixed loss is included in order to reduce the loudness contrast between such connections and the more normal DDD connections. The latter includes the fixed-loss portions of two toll connecting trunks.

9-3 TOLL CONNECTING TRUNK DESIGN

The design of toll connecting trunks is primarily a matter of meeting loss and balance requirements. Losses must satisfy the via net loss plan and must include all the loss components of the trunk. Terminal balance requirements can be met only when the impedances involved in trunk design properly match the impedance of connected circuits.

Loss Components

The basic ICL objective for toll connecting trunks is VNL + 2.5 dB. The actual design loss may vary from this value since adjustments may be needed for uncompensated temperature variation (UTV), delay loss (D), high-loss operation (A pad value), and a final adjustment ($\pm A_c$) to place the design value of the EML on the nearest automatic transmission test and control (ATTC) frame class mark. The actual ICL is thus the sum of VNL + 2.5 dB and these four additional components.

Uncompensated Temperature Variation. Changes in temperature cause changes in the attenuation of cable conductors. Uncompensated temperature variation represents a change in trunk loss with temperature for which there is no compensation. The losses normally assumed are those at 55 degrees Fahrenheit. At temperature extremes, trunk losses may be appreciably different from the assumed values. To avoid operating circuits at less than the computed minimum loss, a portion of the UTV is sometimes added into the computation. If the UTV is 1.0 dB or less, no correction is made; if the variation is 1.1 dB or more, a correction of UTV/2 is made.

Delay Loss. An additional loss component is included in the EML of a trunk in order to compensate for the absolute delay contributed by any delay equalizers used on the trunk. These equalizers may be included in the design of a trunk if the facilities (including the delay equipment) are also shared on an occasional basis with a private line service. The value of delay loss, D, (in dB) is computed by $D = 0.1 \times$ (sum of 1000-Hz round-trip delays in milliseconds of all delay devices in the circuit).

High-Loss Operation of Toll Connecting Trunks. Four-wire No. 4 crossbar toll switching machines can be equipped to take advantage of the fact that trunks on carrier facilities generally have additional gain available which, if added to a connection, makes it possible to increase the loss of metallic toll connecting trunks by an amount equal to the available gain. The method of accomplishing this is referred to as *high-loss design.* Switchable A pads are included in all intertoll carrier trunks that can be switched to high-loss toll connecting trunks. The losses of the toll connecting trunks may be increased by an amount equal to the value of the A pads. When the carrier trunk is switched to the high-loss trunk, the machine switches out the A pad effectively transferring available gain from the inter-

toll trunk to the toll connecting trunk. Steps must be taken to ensure that high-loss trunks are never switched to other high-loss trunks. The decision to use high-loss or low-loss design is made on an economic basis. It is necessary to take into account the additional costs resulting from administering separate high-loss and low-loss trunk groups and from the extra maintenance costs required for testing the switched pad. With the increasing use of T-type carrier systems for toll connecting trunks, high-loss design becomes less desirable economically.

Figure 9-10(a) illustrates an intertoll trunk equipped with a 7-dB switchable A pad at each end. The trunk is shown with the A pads switched out of the circuit and test equipment connected through loss which may be test pads (TP 9) or 9-dB test hybrids. The effective testing loss (ETL) still remains 2 dB (9 — 7 dB) at each end of the trunk.

Figure 9-10(b) shows the same trunk switched into a connection between high-loss and low-loss toll connecting trunks. On the left end, the A pad is switched out of the connection to compensate for the additional loss permitted in the high-loss toll connecting trunk. On the right end, the A pad remains in the circuit since that connection is to a low-loss toll connecting trunk.

Class Mark Adjustment. The ATTC class mark is the nearest loss value which can be obtained by the automatic transmission test and control frame which compares the actual measured loss with the specified class mark representing the expected measured loss of the trunk being measured. The class mark can only be set in 0.3 dB steps from 3.9 through 12.0 dB. The EML must first be computed to the nearest 0.1 dB and the resultant is adjusted to the nearest ATTC class mark. The ATTC adjustment is added to or subtracted from both the EML and ICL.

Computation of EML. The EML of the trunk is the sum of the ICL and the effective testing losses. Effective testing loss, as previously mentioned, is the difference between test pad or test hybrid losses and any A pads that are switched out during testing conditions. The ETL used in the switched network is normally 2 dB for each class 4 or higher switching office. Test pads are not normally provided at class 5 offices. Therefore, the EML for toll connecting trunks is:

$$\text{EML} = \text{VNL} + \text{A pad loss} + UTV/2 + D + 2.5 \pm A_c + \text{ETL} \quad (9\text{-}1)$$

where VNL = via net loss factor $\times$ trunk length in miles + 0.4 dB.

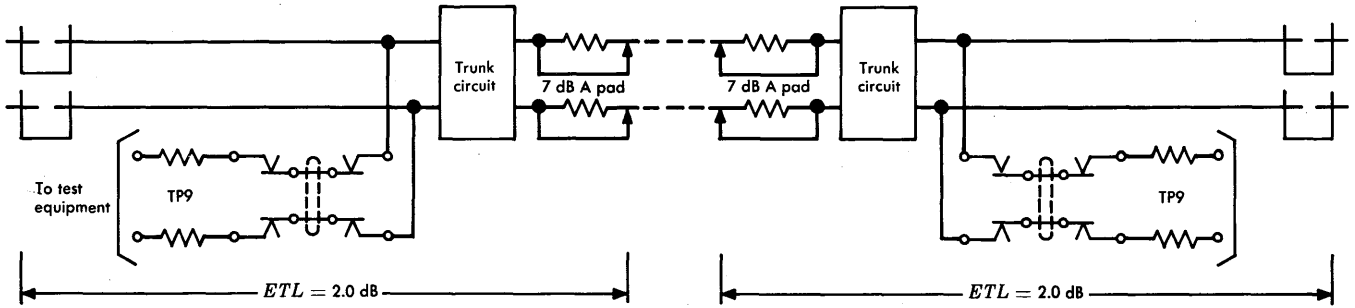

(a) Test condition

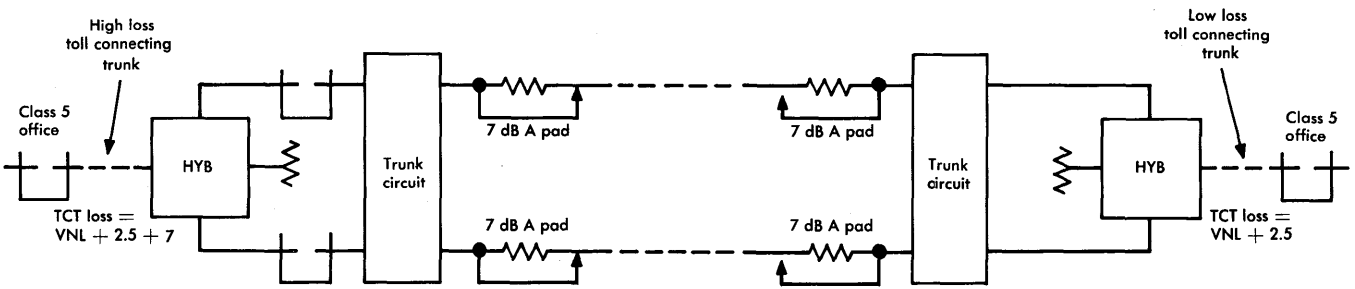

(b) Operating condition

Figure 9-10. Intertoll trunk equipped with switchable A pads.

Trunk Length Considerations

Toll connecting trunk lengths vary from very short (intrabuilding or between adjacent buildings) to a maximum length of 735 miles. Also, the type of facilities used in the design of these trunks differs with length. The shorter trunks use two-wire nonloaded cable pairs; gain devices, loading, and four-wire design or carrier facilities are employed progressively as trunk length increases.

For short toll connecting trunks with no gain devices, a 2.0 dB minimum loss is acceptable if balance requirements are met. Nonrepeatered trunks whose ICLs would be less than 2 dB must be provided with 2-dB pads at the toll office to meet terminal balance requirements. Figures 9-11(a) and (b) illustrate short toll connecting trunks from a class 5 office to a two-wire switching machine and to a switchboard. Fixed-loss pads or an impedance compensator must be provided on nonloaded trunks; for longer trunks, gain may be required at the class 5 office end. Figure 9-11(c) shows a longer trunk in which an impedance compensator and an E6 repeater are used.

The length of two-wire toll connecting trunks can be further extended by using loaded facilities, by adding gain at the class 5 office, or by adding gain at an intermediate office. If the repeater is located at the toll office, it is difficult to meet terminal balance objectives because the return loss due to structural irregularities of the cable is reduced by the repeater gain. No more than one intermediate repeater can be used.

Where two-wire facilities are switched by a four-wire machine at the toll office, the loss of the conversion hybrid may cause the ICL to exceed the design objectives and makes high-loss operation desirable. However, with loaded cable and the optional use of gain, as shown in Figure 9-12(a), either high- or low-loss operation is possible.

Beyond the lengths feasible for toll connecting trunks on two-wire facilities, four-wire transmission must be used. This can be provided by either repeatered four-wire VF or carrier facilities as illustrated in Figure 9-12(b).

Impedance Matching

All class 5 office trunk terminations are nominally 900 ohms; all toll office terminations are nominally 600 ohms, with the exception of the 900-ohm terminations used in crossbar tandem offices. Proper

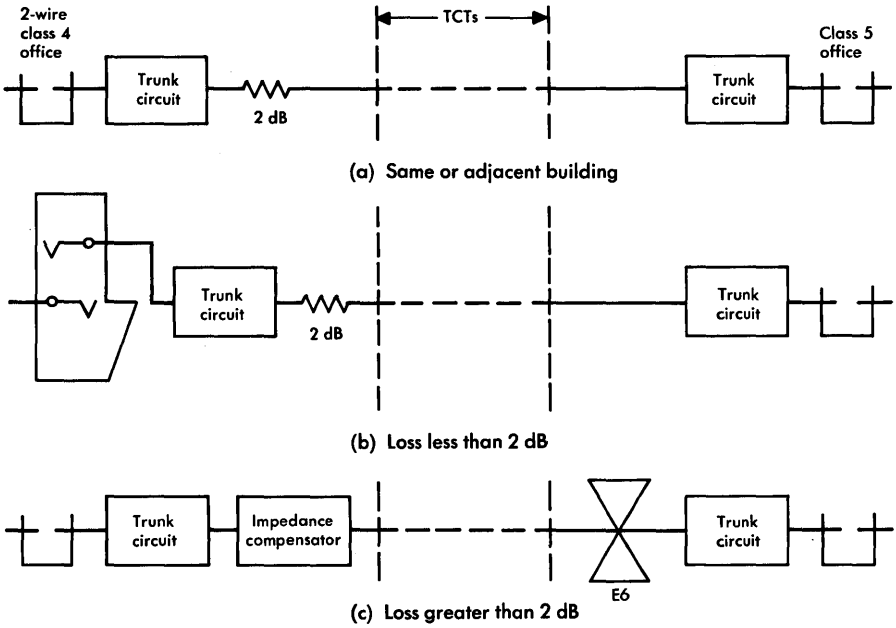

Figure 9-11. Toll connecting trunks utilizing two-wire nonloaded facilities.

termination of trunks to match local and toll office impedances is absolutely necessary if terminal balance requirements are to be met. The nominal office terminating impedance determines the selection of suitable repeating coils or four-wire terminating sets so that at the point of switching, a common impedance is presented by all trunks. Where repeating coils are required at local offices for signalling purposes, the use of the optimum ratio substantially eliminates any reflection loss which would result from dissimilar impedances. Design layouts which result in more than one repeating coil in any path through a toll office should be avoided.

Figure 9-13(a) shows a two-wire trunk transformed to a four-wire trunk at a four-wire switching machine. Here, a precision network simulates the impedance of the specific two-wire trunk facility it balances. In Figure 9-13(b), a four-wire terminating set uses a repeating coil hybrid as an interface between a four-wire trunk facility and a two-wire switching machine. Since the hybrid must be balanced against a variety of loop impedances through the switching

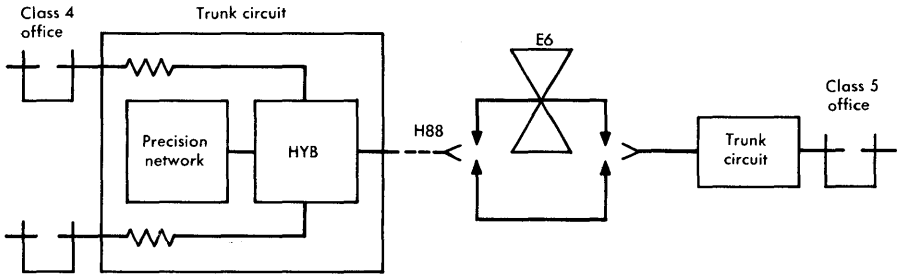

(a) Loaded, two-wire trunk, optional gain

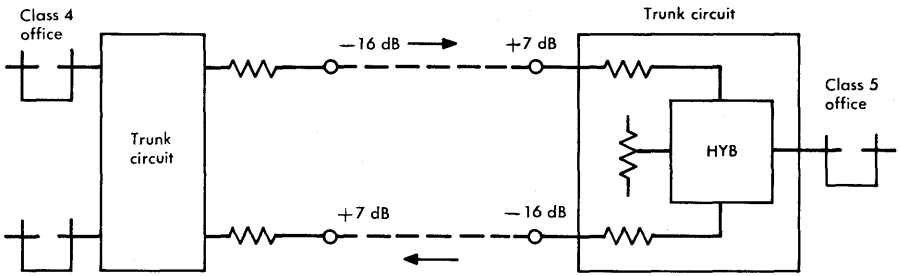

(b) Four-wire trunk on carrier facilities

Figure 9-12. Toll connecting trunks to four-wire switching machine.

machine, a compromise network consisting of 900 ohms in series with a 2.16 μF is used.

Loaded two-wire trunks may require impedance compensators at the toll office to make the sending-end impedance of a loaded cable pair substantially uniform and predominantly resistive in the frequency range from about 1000 Hz up to about 85 percent of the high-frequency cutoff.

It is common practice to use a half-loading section to terminate loaded pairs at the central office. The impedance characteristic of a loaded pair at the half-way point of a loading section has a resistance component which increases with frequency and a very small negative reactance component. The compromise network in the intertoll trunk circuit has a fixed resistance at all frequencies. Since the resistance component of the trunk impedance increases with frequency, the return loss at the compromise network deteriorates with increasing fre-

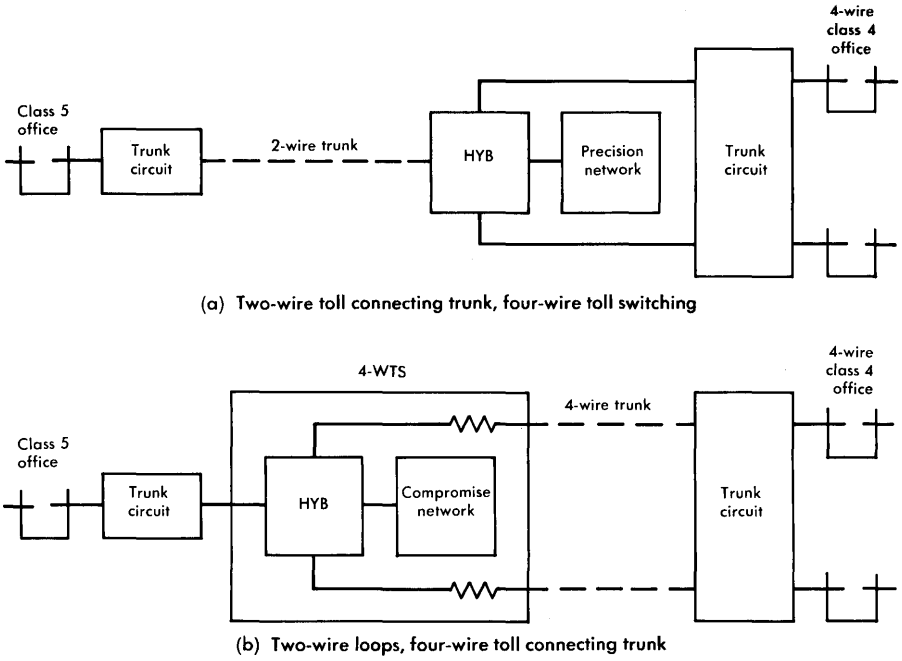

Figure 9-13. Use of precision and compromise networks.

quency; the amount of deterioration depends on the cutoff frequency of the loading system. With H88 loading, the 3000-Hz return loss is about 9 dB. To improve this return loss substantially, it is necessary to keep the cable pair impedance relatively constant over the frequency range. The improvement is accomplished by the use of an impedance compensator at the toll office.

The compensator is a simple circuit arrangement consisting of a bridged adjustable capacitor, a high-frequency corrector circuit, and a low-frequency corrector circuit connected in tandem as shown in Figure 9-14. The capacitor is used to build out the end half-section of the loaded cable to approximately 0.8 of a full section. The resistance component of the impedance of the 0.8 full section is substantially uniform over the frequency range up to a high fraction of the cutoff frequency and the reactive component becomes increasingly negative with frequency. The high-frequency corrector has a positive reactance proportional to frequency which tends to cancel the negative

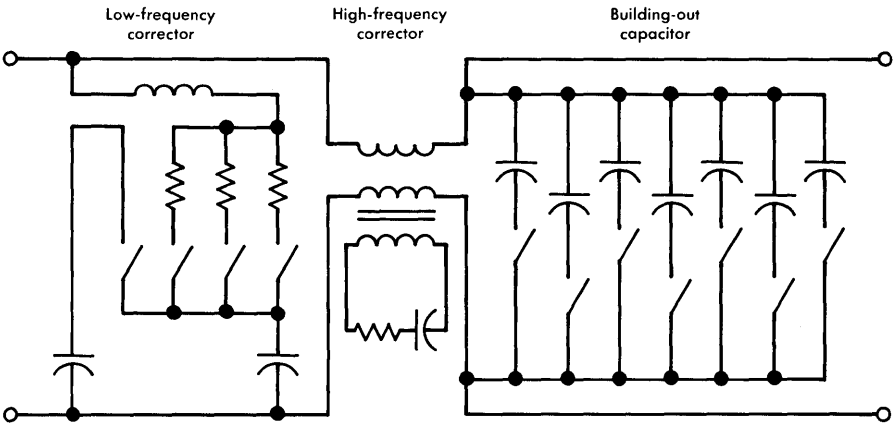

Figure 9-14. Impedance compensator.

reactance over the frequency range in question. This results in an impedance substantially resistive and of fairly uniform value between 1000 Hz and 85 percent of the cutoff frequency.

9-4 INTERTOLL TRUNK DESIGN

The design of intertoll trunks involves problems similar to those encountered in the design of toll connecting trunks. Both loss and balance requirements must be satisfied to meet the needs of the via net loss plan. In intertoll trunk design, failure to meet balance requirements calls for an adjustment in the form of increased loss.

Loss Components

The design objective for the inserted connection loss of intertoll trunks under the VNL plan must be adjusted for uncompensated temperature variation, delay loss, and adjustment of the expected measured loss to the nearest test frame class mark. An additional factor, not previously discussed under toll connecting trunks, is a loss adjustment that must be made where a terminating office does not meet balance requirements.

Balance Deficiency Loss Adjustment. Included in the design ICL may be a loss adjustment to offset the effects of through and terminal unbalance. This loss is added to provide acceptable echo performance on trunks that terminate at two-wire toll switching points or at two-wire switchboards.

The ideal value of this loss, zero, is used when the office is balanced satisfactorily. Figure 9-15 lists the loss adjustment in dB to be included in ICL calculations for median values of office through balance. If the median office balance has not been determined by measurement, a loss adjustment value of 0.3 dB is assumed. If the adjustment is not the same for both terminal offices of the trunk, the higher value only is applied.

MEDIAN OFFICE BALANCE	LOSS ADJUSTMENT, dB
27	0.0
21	0.3
18	0.6
16	0.9
15	1.2
14	1.5

Figure 9-15. Loss adjustments for through balance deficiency.

Where terminal balance requirements are not met, a 2.0 dB increment is added to the ICL for all intertoll trunks which are terminated in that office. When such an adjustment is made, no adjustment is required for through balance deficiency.

Expected Measured Loss. The EML for intertoll trunks is the ICL plus the adjustments discussed above and the effective testing losses.

Thus,

$$\mathrm{EML} = \mathrm{VNL} + B + UTV/2 + D \pm A_c + \mathrm{ETL} \qquad (9\text{-}2)$$

where B = loss adjustment for balance deficiency

UTV = uncompensated temperature variation

D = delay loss

A_c = test frame class mark adjustment

and

ETL = effective testing loss, normally 4 dB.

Intertoll Trunk Layout

Figure 9-16 shows the layout and level diagram of a typical intertoll trunk between regional centers. Single-frequency signalling units are shown and are required for supervisory signalling even when multifrequency pulsing is employed. A full echo suppressor is included in accordance with application rules. The values of the level adjusting pads P_T and P_R are computed to provide proper transmission level points at the carrier channel input and output. The A pads provide for high-loss toll connecting trunk operation at both ends of the intertoll trunk. Trunk circuits provide trunk terminations and connections to the switching machines. Connections to test hybrids (TH) are shown in the standard office testing arrangements. Since an echo suppressor is used, the ICL is 0 dB and, with the A pad and test hybrid arrangements shown, the EML is 4 dB.

Secondary Intertoll Trunks

A secondary intertoll trunk is used to interconnect a toll switching machine and its associated manually operated switchboard in the same or an adjacent building. If the switchboard is remote from the switching machine, the trunks are classed as intertoll and the switchboard must be assigned a separate class in the hierarchy (the highest class allowed is 4).

Secondary intertoll trunks are separately identified because they are extra trunks in the hierarchical plan and should be designed on a four-wire basis as are most other intertoll trunks. They also differ in that they can and should be operated at 0-dB loss when designed without gain devices and switched by No. 4A crossbar switching machines with A pads.

9-5 IMPACT OF DIGITAL SWITCHING ON TOLL TRUNK DESIGN

The introduction of No. 4 ESS makes possible the switching of digital signals without conversion to analog form. The implications of this capability have made necessary the development of a new transmission plan for the message network with provision for digital switching and transmission facilities. The purpose of this plan is to assign transmission losses and level points that facilitate plant maintenance and network administration while providing the best possible

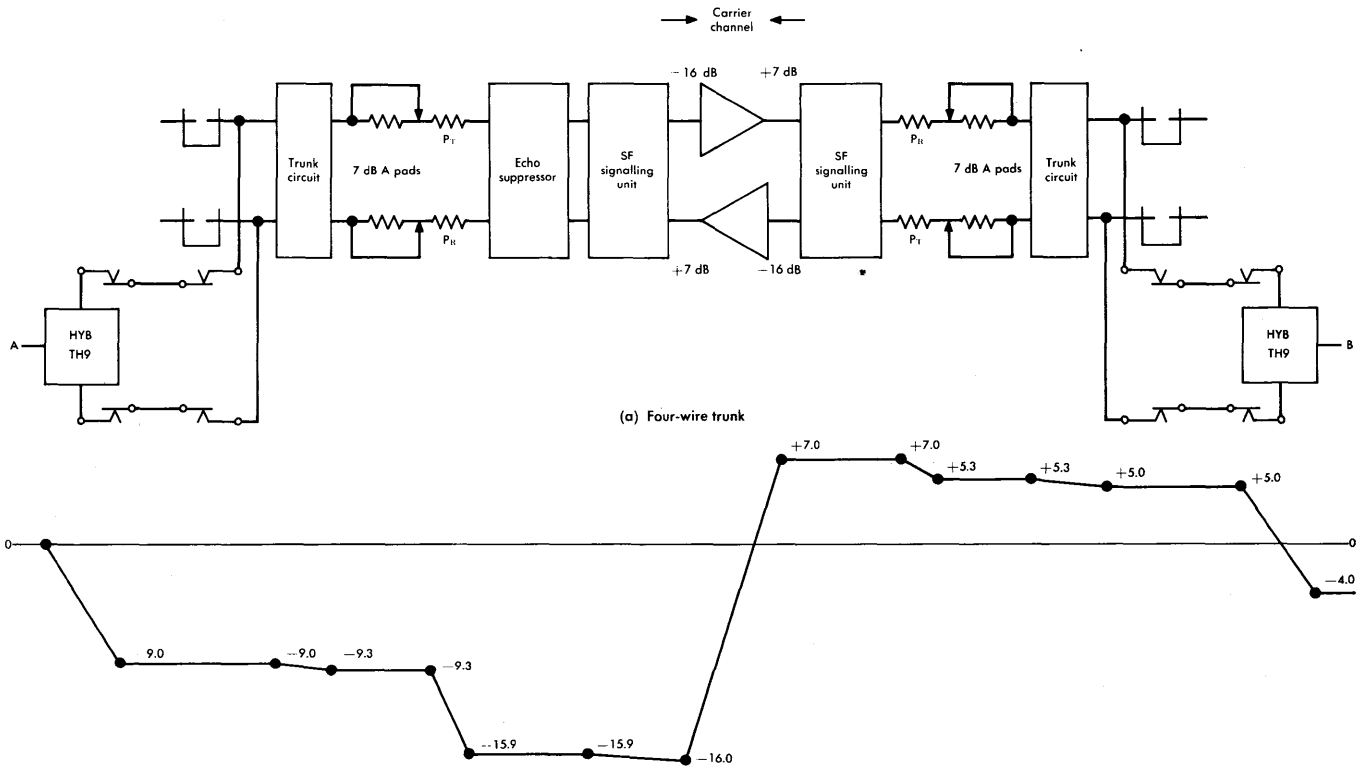

Figure 9-16. Intertoll trunk layout and level diagram.

grade of service. In addition, the plan provides for a smooth transition from the existing analog switching network to one with both analog and digital capabilities.

Loss Plan For All Digital Network

The via net loss plan is not well suited to an all digital network. As indicated previously, the VNL design plan provides for control of talker echo by assigning toll trunk loss as a function of length. In an all digital network, signals are digitally encoded into bit streams at the class 5 office and the encoded signals are switched at toll offices. The added loss required by the VNL plan would require either the conversion of the digital signal to an analog signal, insertion of the required loss and reconversion to a digital signal, or changing the encoded signal amplitude by digital processing techniques. Both of these techniques would be costly and would introduce transmission impairments. For these reasons, a study was made to determine if talker echo could be controlled by a loss plan which would permit toll trunks to be operated at fixed loss [3].

The Fixed Loss Plan. A fixed loss of 6 dB for connections of any length appears to be a reasonable compromise between the desirability for lower loss on short connections and the need for higher loss on longer connections to control talker echo. In the fixed loss transmission plan, 3 dB of loss is allocated to each toll connecting trunk and 0 dB to all intertoll trunks.

Figure 9-17 compares the loss/noise grade of service and echo grade of service as functions of the airline mileage per connection for this plan with those for VNL design. The curves show a marked improvement in loss/noise grade of service, particularly for longer connections. However, there is a small decrease in echo performance which is more than offset by the increase in loss/noise grade of service. The echo grade-of-service values shown assume that a digital echo suppressor is applied on longer connections. While the echo grade of service without echo suppressors decreases beyond 800 miles, present studies indicate that performance will be satisfactory if echo suppressors are applied on trunks longer than 1850 miles. However, this value may be changed if, as anticipated, the performance of digital echo suppressors is improved and the cost is substantially reduced.

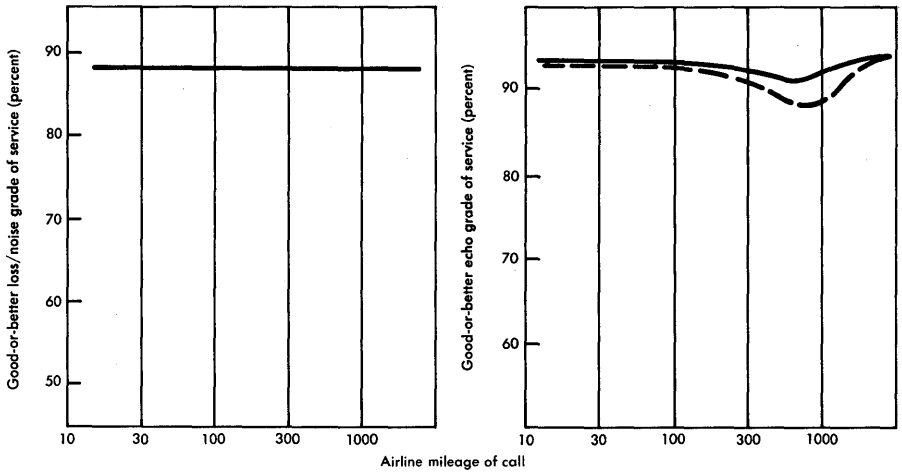

(a) Switched digital network, fixed loss design

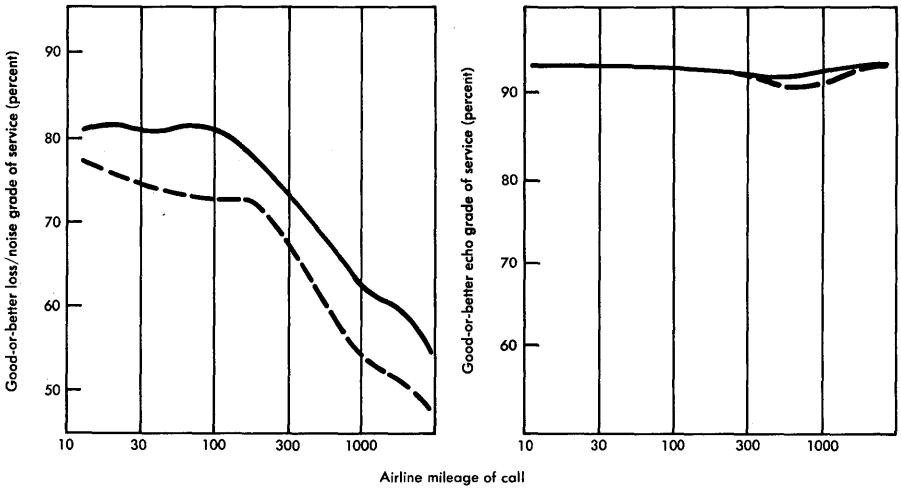

(b) Switched analog network, VNL design

50% of calls better than

90% of calls better than

Figure 9-17. Grade of service for digital and analog networks.

Figure 9-18 compares the fixed loss transmission plan with the via net loss transmission plan. Because of the lower end-to-end loss in a fixed loss connection, the echo grade of service is more sensitive to

	CONNECTION	FIXED LOSS DESIGN		VNL DESIGN	
LOSS	Toll connecting trunks	3.0 dB		VNL + 2.5 dB (4 dB max.)	
	Intertoll trunks	0 dB		VNL (1.4 dB max., final groups; 2.9 dB max., high-usage and full groups)	
	Overall connetion Class 5 to class 5	6.0 dB		Mean 5.8 to 8.2 dB depending on length	
	BALANCE REQUIREMENTS	MEDIAN	MINIMUM	MEDIAN	MINIMUM
ERL	Intrabuilding	22 dB	18 dB	22 dB	18 dB
	Interbuilding				
	Two-wire facility	22 dB	16 dB	18 dB	13 dB
	Four-wire facility	22 dB	16 dB	22 dB	16 dB

Figure 9-18. Comparison of fixed loss and via net loss plan requirements.

the addition of intermediate echoes. In particular, the terminal balance requirements for the control of echo generated in toll connecting trunks must be more stringent for fixed loss than for via net loss design.

Digital Level Plan. The concept of transmission level point applies strictly to analog transmission. It has no real meaning in digital transmission except where the signal is in analog form. Nevertheless, the concept of TLP is a powerful one that can be retained.

It is desirable in the fixed loss network to retain the 6-dB loss for test conditions so that all trunks have an EML of 6 dB. To accomplish this, the transmitting and receiving test equipment at digital offices must be equipped with 3-dB pads and analog-digital converters. Because of the use of 3-dB test pads, the No. 4 ESS can be considered a —3 dB TLP even though signals are in digital form. Since the path through the machine is lossless, the —3 dB TLP applies to the incoming as well as the outgoing side of the machine, a feature unique to digital switching machines.

Combination Analog-Digital Network

With No. 4 ESS machines now operating in the switched network, the first steps have been taken to integrate the fixed loss plan with the via net loss plan. In order to make the analog-digital network as much like the analog network as possible, the combined network must conform to the following constraints:

(1) The EML and ICL must be symmetrical, i.e., the same in both directions.

(2) The —2 dB TLP at the outgoing side of analog toll switches and the 0 dB TLP at class 5 offices must be retained.

(3) The present input and output transmission level points of all transmission facilities (—16 dB and +7 dB) must be retained.

(4) The existing lineup and testing procedures for D-type channel banks must be retained.

These constraints result in loss and level plans which dictate changes that must be made in the present network as digital switching machines are introduced.

Figure 9-19 shows how the No. 4 ESS may be interconnected in the switched message network. The trunks in this figure include the

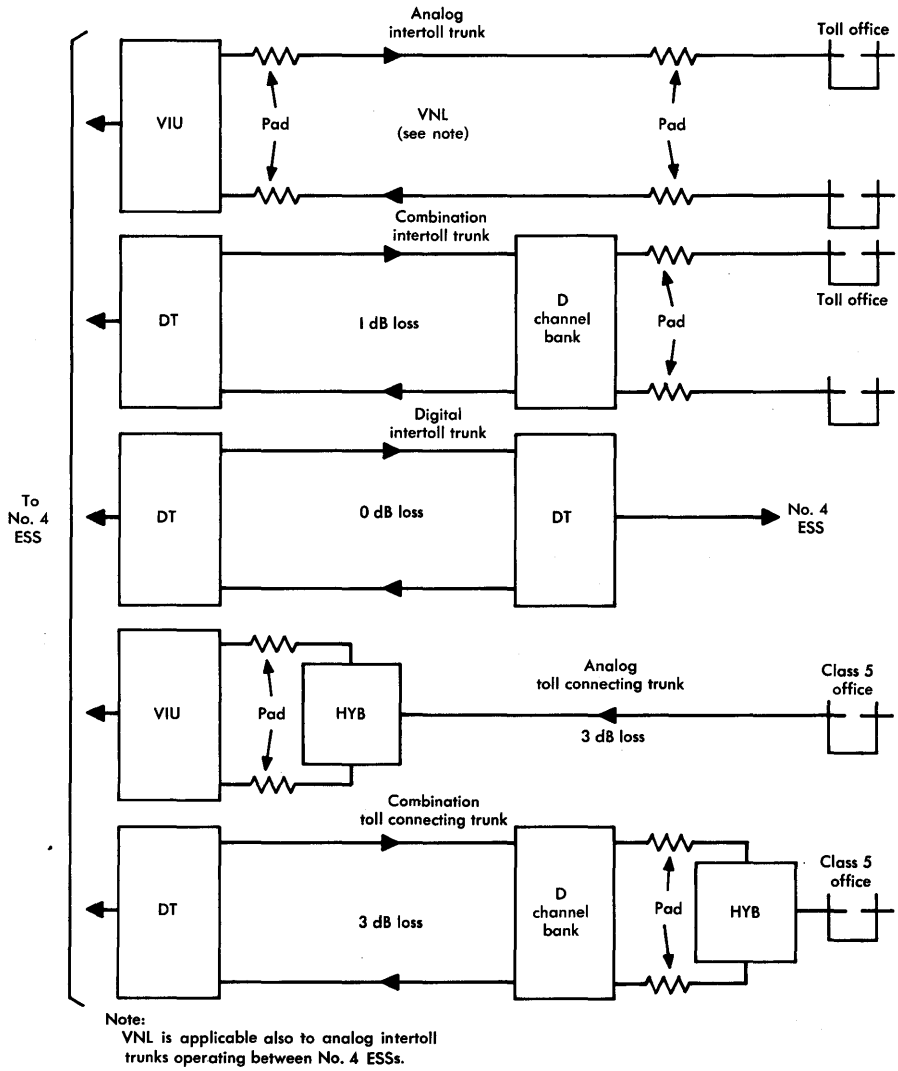

Figure 9-19. Intertoll and toll connecting trunk loss.

various types that must be used in the combined analog-digital network:

(1) *Analog trunks* terminate at voice interface units (VIU) at the digital switching machine.

(2) *Combination trunks* use digital facilities and terminate at digroup terminals (DT) at the digital switching machine and D-type channel banks at the other end.

(3) *Digital trunks* use digital facilities and terminate on digroup terminals at both ends. Only trunks between digital switching machines can be of this type.

Voice interface units process analog voice-frequency signals by pulse code modulation for digital switching. Digroup terminals process digital bit streams into individual digital signals for switching.

Combination intertoll trunks must be designed to have ICLs of 1 dB to be consistent with the —2 dB and —3 dB TLPs at analog and digital offices, respectively. A design loss of 1 dB is higher than the VNL for short trunks and less than the VNL for long trunks. Detailed studies show that typical connections involving 1-dB combination trunks have better loss/noise and echo grades of service than VNL design. This improvement is caused by the decreased noise and delay of digital facilities relative to analog facilities. However, it was found that connections utilizing 1-dB intertoll trunks on analog facilities have poorer loss/noise and echo grades of service than those utilizing normal VNL design. For this reason, analog intertoll trunks should be designed according to VNL rules.

REFERENCES

1. American Telephone and Telegraph Company. *Telecommunications Transmission Engineering*, Volume 1, Second Edition (Winston-Salem, N. C.: Western Electric Company, Inc., 1977), Chapter 26.

2. Hatch, R. W. and A. E. Ruppel. "New Rules for Echo Suppressors in the DDD Network," *Bell Laboratories Record*, Vol. 52 (Dec. 1974), pp. 351-357.

3. Spang, T. C. "Loss-Noise-Echo Study of the Direct Distance Dialing Network," *Bell System Tech. J.*, Vol. 55 (Jan. 1976), pp. 1-36.

Chapter 10

Through and Terminal Balance

Through balance and terminal balance are the terms used to describe the processes of measurement, adjustment, and evaluation as applied to the control of echo and singing in a switched network. For a full appreciation of through and terminal balance, it is necessary to understand the impedance relationships at various interface points, the ways in which echo and singing can be controlled, and the applicable objectives. In addition, balance measurements, the use of various types of apparatus, and the procedures applied in attaining satisfactory balance must also be thoroughly understood. The balancing procedure is presented in general terms without regard to specific types of switching equipment, testing arrangements, or office layouts in order to highlight the steps required to balance an office and to clarify the overall task. Familiarity with the testing sequence is necessary for an overall understanding of through and terminal balance concepts.

10-1 IMPEDANCE RELATIONSHIPS

Intertoll trunks are provided on four-wire transmission facilities which must be converted to two-wire transmission facilities wherever two-wire machine switching or operator connections occur. The termination of the four-wire facility and the conversion to two-wire transmission is accomplished by a four-wire terminating set that employs a transformer-type hybrid coil with a balancing network. This type of interface is designed to permit the desired transfer of power from the four-wire facility receiving path into the two-wire facility and from the two-wire facility into the four-wire facility transmitting path. However, the nature of the hybrid coil is such

that any impedance mismatch between the two-wire path and the balancing network causes undesirable reflected power. Therefore, controls are necessary to achieve the best match of the impedances.

Control of echo and singing involves matching the impedance of the balancing network in the four-wire terminating set to the impedance of the two-wire facility to minimize power reflections in the transmitting path of the four-wire facility. Balance primarily consists of matching (or balancing) the capacitance of the interconnection path of intertoll trunks with other intertoll or toll connecting trunks to the capacitance in the balancing networks of the associated four-wire terminating set. In the circuit of Figure 10-1, the network build-out capacitance (NBOC) of the four-wire terminating set should be equal to the sum of the capacitance of the cabling and circuitry of any path through the switching office and the equivalent capacitive component of its connected trunk input impedance. For an ideal impedance match, Z_1 should equal Z_2; therefore,

$$\text{NBOC} + C_a = C_b + \Sigma\, C_c$$

and

$$R_a = R_b + \Sigma\, R_c \quad .$$

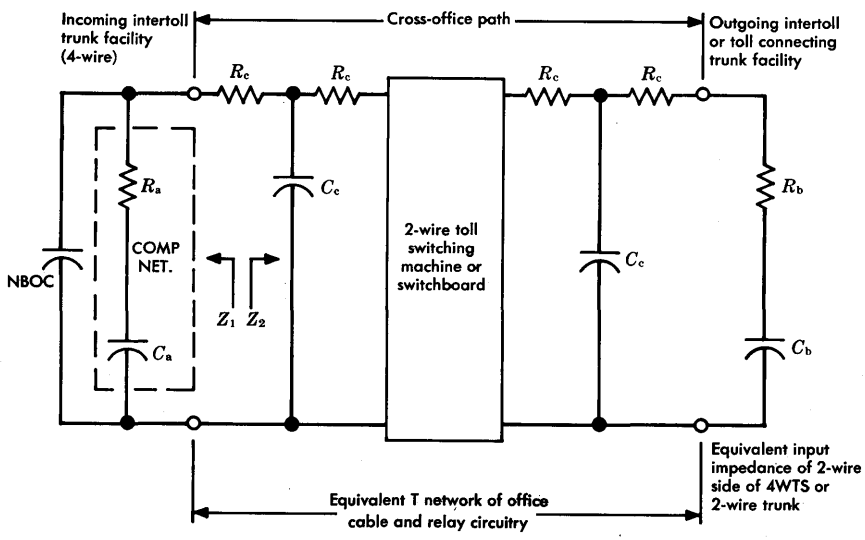

Figure 10-1. Equivalent network of office impedances.

Such an ideal match cannot be achieved in practice because of the many possible two-wire connections within a toll switching office. Also, a trunk in a toll switching office may be connected to many different trunks; while all of them have a fixed nominal impedance, the actual impedance varies due to different types and lengths of office cable and the normal variation among different items of equipment.

In balancing an office, compromise impedances are used to provide the best impedance matches possible across the hybrids of the greatest number of intertoll trunks. The built-in balancing network of a four-wire terminating set consists of a compromise network, the impedance of which is equal to the nominal trunk input impedance* (600 or 900 ohms in series with 2.16 μF), and an externally connected adjustable network build-out capacitor. Thus, in Figure 10-1,

$$R_a = 600 \text{ or } 900 \text{ ohms}$$

and

$$C_a = 2.16\ \mu\text{F}.$$

The resistance component, the summation of R_c, is controlled only by limiting the maximum resistance of the two-wire cross-office path. The capacitance, C_a, has a value equal to the nominal value of C_b. In the process of balancing an office, the NBOC is set to match the total cross-office capacitance, the summation of C_c.

Figure 10-2 shows the sensitivity of both capacitive and resistive unbalance in a typical test arrangement. Curve A represents the return loss performance when the circuits are well balanced. The other curves show the return loss degradation for different values of resistance and capacitance between the four-wire terminating sets.

Ideally, cross-office paths would have office cable and apparatus causing little or no modification of a terminating impedance; the impedance facing the four-wire terminating set would thus be relatively constant and matched to the compromise network. However, varying cable lengths and switchbank and switchboard multiples cause variations in cable capacitance. Consequently, adjustable build-out

*These nominal impedances are often used loosely to identify central offices which may be referred to as "600-ohm" or "900-ohm" offices.

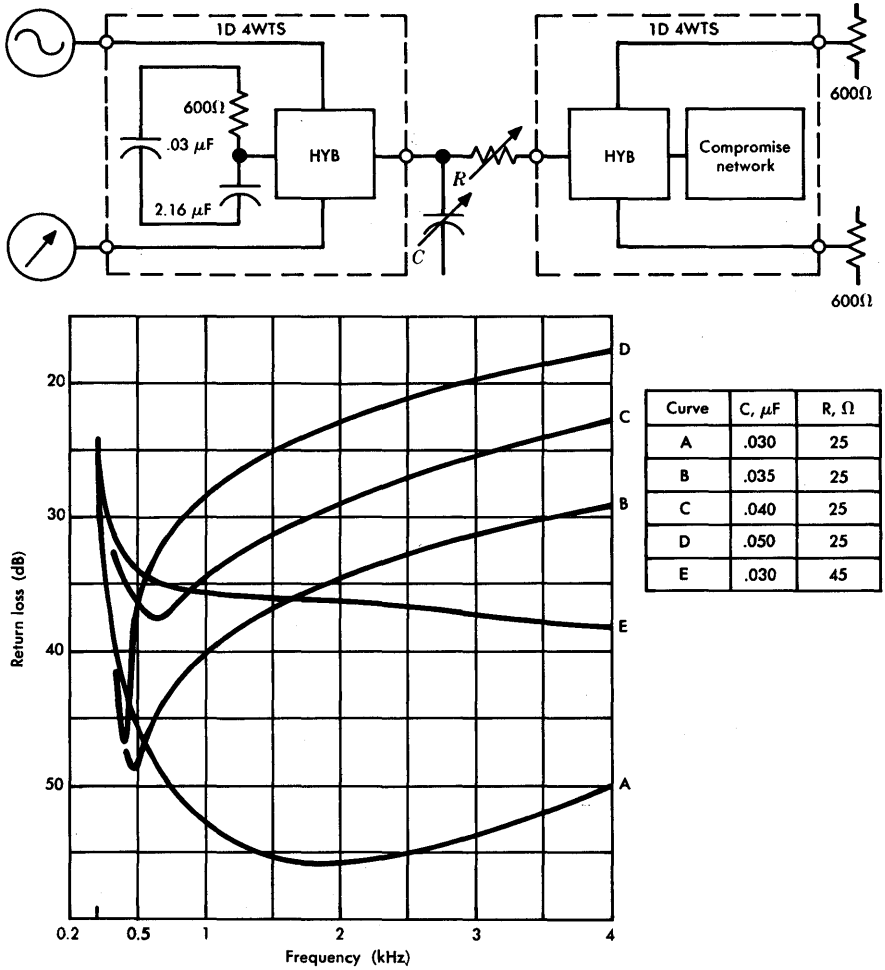

Curve	C, μF	R, Ω
A	.030	25
B	.035	25
C	.040	25
D	.050	25
E	.030	45

Figure 10-2. Sensitivity of capacitive and resistive imbalance.

capacitors are provided on all two-wire office paths to permit narrowing the range of the two-wire line impedances presented to the four-wire terminating set. These capacitors are commonly referred to as drop build-out (DBO) capacitors and are located in the trunk relay circuit. A common value of NBOC, unique to the equipment and wiring arrangements of a particular switching office, is set into the compromise networks of all four-wire terminating sets in the office. Drop

build-out capacitors are then adjusted, where necessary, on individual two-wire office paths so that the DBO capacitance plus the capacitance of the office cabling and circuitry matches within limits the capacitance of the NBOC in any connection through the office.

10-2 CONTROL OF ECHO AND SINGING

It has been shown by subjective tests that talker echo is a serious form of transmission impairment when echo amplitude is high and delay is also large. Another serious form of transmission impairment occurs when return losses are small and power is returned at a single frequency with sufficient magnitude to start self-sustained oscillation. This impairment, called singing, may occur where the round-trip gains exceed the losses around a circuit [1].

The voiceband frequencies in switched network connections are normally limited by the four-wire facilities to the 200- to 3200-Hz range, a range over which echo, singing, and near-singing impairments must be considered. The frequencies at which most talkers find echo objectionable are in the 500- to 2500-Hz range. At these frequencies, the talker usually complains of echo somewhat before singing occurs. Therefore, the balance objectives for control of the return loss in this frequency range are more stringent than those for other frequencies in the voiceband. Singing generally occurs in the frequency ranges from 200 to 500 Hz and 2500 to 3200 Hz. Singing or near singing in these ranges is usually noticed by a talker before echo becomes objectionable. Consequently, both through and terminal balancing procedures include separate tests to evaluate each of the impairments, i.e., echo return loss and singing return loss (singing point). The results of both measurements are necessary to evaluate balance in a given circuit.

Via Net Loss Design

The VNL design specifies trunk losses necessary to control echo in the switched message network. The plan is based on an overall connection loss of VNL + 5 dB from class 5 office to class 5 office which takes into account the distribution of return losses of subscriber loops at class 5 offices. Each of the two toll connecting trunks in an overall connection is assigned 2.5 dB; in addition, VNL dB is assigned to all trunks not equipped with echo suppressors. The VNL design plan

assumes that significant reflections occur at class 5 offices that must be compensated by designed loss and that no significant reflection occurs from the interconnection of trunks at toll switching offices. As a result of the latter assumption, effective operation of the plan depends on meeting and maintaining through and terminal balance objectives.

Additional loss (called a B-factor) was, until recently, assigned to all intertoll trunks terminating at an uncertified office in order to protect the network from excessive echo impairment. An unbalanced toll center, for example, might become a potential source of echo to the entire network. Echo, not heard in this toll center area, could be heard at the distant end of all connections that pass through this toll center. Because of these effects, the source of echo is difficult to identify and isolate. Thus, balance objectives, set at values that produce sufficiently high return loss to control echo when trunks are interconnected, were satisfied by the added B-factor loss. Such echo control is now provided by balance work initiated after unsatisfactory results of trunk transmission maintenance index measurements are observed.

Return Loss

Return loss is a measure of the impedance match between two circuits at the point of their interconnection. It can be expressed for any frequency as

$$\text{Return loss} = 20 \log \frac{|Z_1 + Z_2|}{|Z_1 - Z_2|} \text{ dB}$$

where Z_1 and Z_2 are the impedances of the interconnected circuits. Consider this equation and the components of impedances Z_1 and Z_2; it can be seen that, at a given frequency, the return loss is infinite at the interconnection point when the impedances are equal (balanced) since $|Z_1 + Z_2| / |Z_1 - Z_2|$ is then infinity. Conversely, a complete mismatch (unbalanced) occurs when either, but not both, Z_1 or Z_2 is zero. The return loss for that frequency is then zero, since the logarithm of 1 is zero [1]. This relationship is used to establish useful performance criteria for echo return loss, singing point, and singing return loss.

Echo Return Loss. Echo return loss (ERL) is a weighted average measurement of the return losses for all frequencies in the echo

range (500 to 2500 Hz). This measurement is made at the interconnection of the four-wire and two-wire circuits of intertoll trunks.

Singing Return Loss and Singing Point. Singing return loss (SRL) is the weighted average return loss in the singing bands of 200 to 500 Hz and 2500 to 3200 Hz. It is the lower of the two values (high band or low band) as measured by a return loss measuring set (RLMS). The SRL in the 2500- to 3200-Hz band is referred to as SRL HI.

The singing point (SP) is a measure of the return loss at a single frequency in the 200- to 3200-Hz voiceband. The single frequency at which the singing point applies is usually the frequency having the lowest return loss at the hybrid interconnection; it is the critical frequency in the voiceband at which gain and phase relationships may cause singing. While singing may occur in theory at any frequency in the voiceband, the critical frequency is usually found near the upper or lower end of the band because of two-wire circuit impedance characteristics.

The difference between singing return loss and singing point is in the two methods of measurement. Singing return loss is conveniently measured by a weighted noise technique similar to that used for echo return loss measurements but measurement is confined to the singing bands. Singing point is a single-frequency return loss measured at the critical frequency. The two values are, in practice, essentially the same in a given circuit and may usually be considered equivalent.

10-3 BALANCE OBJECTIVES

Ideally, VNL objectives for through balance would allow no echo or singing paths at intermediate switching points in a connection. Such ideal objectives could only be met by the exclusive use of four-wire switching (including switchboards) and transmission arrangements, an impractical mode of operation. However, objectives are frequently used in another sense to define performance requirements that achieve a satisfactory economic and technical compromise. The performance requirements for through and terminal balance, expressed statistically, are such a compromise. This method of expressing objectives is such that the measured values must be analyzed. If the distribution of the measurements is or approaches a normal distribution and the requirements are met in all offices, the overall objectives are also met. When trunks do not meet the minimum re-

quirements, they should be investigated for the source of poor balance. When the turndown limit is exceeded, the trunk must be removed from service for corrective action. Also, any trunk having a return loss decidedly lower than another trunk with similar equipment should be investigated. A careful check may show that the balance can easily be improved.

Balance Requirements

A toll switching office must meet balance requirements when it is placed into service. Balance must be maintained by meeting requirements on each trunk that is added or rearranged.

Through Balance. Through balance concerns the connection of one four-wire intertoll trunk with another where these trunks are switched on a two-wire basis. Through balance requirements must be met on all intertoll-to-intertoll connections through a two-wire switching machine. These requirements must be met at all two-wire class 1, 2, and 3 switching offices and their associated switchboards and, in addition, at four-wire offices that have two-wire switchboards arranged for through intertoll-to-intertoll connections for conference calls and operator assistance calls. Through balance measurements are made on connections from the four-wire terminating set of an incoming intertoll trunk to the four-wire terminating set of an outgoing primary or secondary intertoll trunk. The connections are established through the switching machine and may include a switchboard.

The requirements on through balance are expressed for incoming intertoll trunks through to an outgoing intertoll trunk and for an outgoing intertoll trunk through to an intertoll trunk where either may be switched by machine or manual switchboard. The trunks under test are measured from four-wire terminating set to four-wire terminating set and must be built out to the longest length path in the switchframe. For echo return loss, the median expected value is 27 dB and the minimum is 21 dB. The turndown limit is 18 dB. For singing return loss, the median expected value is 20 dB, the minimum is 14 dB, and the turndown limit is 11 dB. These values are interpreted as actual measurements minus the transhybrid loss.

Terminal Balance. Terminal balance concerns the connection of intertoll trunks to toll connecting trunks. Terminal balance requirements must be met on all intertoll-to-toll connecting trunk connections.

Terminal balance applies to all class 4 offices and their associated switchboards and may apply to any class 1, 2, or 3 office whether two-wire or four-wire. Class 1, 2, and 3 two-wire switching offices must usually meet both through and terminal balance requirements. Terminal balance measurements are made on connections from the four-wire terminating set of an incoming intertoll trunk or the balance test circuit to a toll connecting trunk terminated at the class 5 office. Requirements for terminal balance are given in Figure 10-3.

Office Cabling Resistance Limit

Since resistance buildout is provided in the balancing networks of four-wire terminating sets, it is necessary to limit the cross-office cabling resistance in order to meet balance requirements. In toll switching offices, reasonable control of the resistance component of the office impedance is accomplished by equipment design, office layout, and maximum use of 22-gauge office cabling in the transmission path. When equipment rearrangements, additions, deletions, and modifications change the amounts of office cabling and/or apparatus in two-wire paths, the impedances may change and the effects on the balance in the office should be investigated. The maximum resistance which can be permitted while meeting through balance requirements has been determined by studies which considered the following factors: (1) the changes in capacitance with different junctor paths through the switches, (2) the rough gradation of the steps in the adjustments on the NBO and DBO capacitors in the two-wire path, (3) the structural return loss of the hybrid circuit, and (4) the effect of imperfect terminations on the four-wire side of the four-wire terminating sets. These studies indicate that the loop resistance of the cabling between four-wire terminating sets should not exceed 65 ohms in 900-ohm offices and 45 ohms in 600-ohm offices.

Normally, the maximum allowable value of cable resistance is exceeded before the total amount of shunt capacitance and DBO capacitance (if used) in the office cabling of a through-type connection becomes larger than the maximum permissible capacitance value. An exception occurs where there is a large amount of bridged cabling in the connection, such as may be present in large switchboard multiples. This bridged capacitance may result in the capacitance limit being reached before the resistance limit is reached.

Four-wire terminating sets must be designed to the appropriate nominal two-wire impedance, 575 ohms in series with 2.16 μF for

CLASS 4 OR HIGHER RANKING SWITCHING OFFICE*		ECHO RETURN LOSS,† dB			SINGING RETURN LOSS,† dB		
		MEDIAN	MINIMUM	TURNDOWN LIMIT	MEDIAN	MINIMUM	TURNDOWN LIMIT
Incoming intertoll trunk to all outgoing toll connecting trunks switched by machine or switchboard.	Two-wire toll connecting trunk or carrier with two-wire VF extension	18	13	10.5	10	6	4
	Four-wire toll connecting trunk	22	16	10.5	15	11	4
An outgoing intertoll trunk switched to all incoming toll connecting trunks by machine or switchboard.	Two-wire toll connecting trunk in same building with 2 dB pad	22	18	10.5	14	10	4

*Trunks selected for test are measured from four-wire terminating set to balance termination in class 5 office and must have average length path to switch frame.

†Values given are actual measurements minus transhybrid loss.

Figure 10-3. Terminal balance requirements.

600-ohm offices and 875 ohms in series with 2.16 μF for 900-ohm offices. These values allow for an average resistance of 25 ohms in the office cabling. Where 22-gauge wire is used, these values correspond to approximately 800 feet of cabling; an NBO of 0.030 to 0.040 μF is required, depending on the amount of bridged cabling capacitance.

Office Cabling Capacitance Limit

In all cases, the maximum permissible value of capacitance in office cabling for any connection is limited by attenuation/frequency distortion and is specified as 0.080 μF. For example, a shunt capacitance of 0.080 μF in a 900-ohm circuit produces a difference in loss between 1000 and 3000 Hz of 1.2 dB. This difference in loss for a connection through the office is also affected by capacitance of the four-wire paths between the four-wire terminating sets and the facility terminals (e.g., channels banks). However, this capacitance does not affect the value of the NBO.

Where through paths have capacitance greater than 0.080 μF, 0.080 μF should be used as the office NBO value, even though there is the possibility that the longer paths do not meet balance objectives. Where terminal paths have capacitance greater than 0.080 μF, the computed midrange value should be based on 0.080 μF as the maximum value. In both cases, it becomes necessary to give special engineering attention to the office layout with consideration given to reducing the physical dispersion of equipment and minimizing the length of cable runs.

10-4 MEASUREMENTS

The ERL and SP/SRL objectives for through and terminal balancing are specified in order to meet the requirements of VNL operation of intertoll trunks. The ERL and SP/SRL are measured and stated in terms of a specific degree of balance between the compromise network of an intertoll four-wire terminating set and the connected two-wire line impedance. The objectives are expressed in dB and do not include the inherent circuit losses of the four-wire terminating set; thus, these losses must always be subtracted from the measurements. This terminating set may be one associated with an intertoll trunk or it may be part of a test circuit simulating an intertoll trunk.

The four-wire transmitting and receiving ports of a four-wire terminating set are accessible at a jack field which provides convenient connection points for the transmission-type testing equipment required in balance measurements.

Hybrid Transmission Loss

The transmission loss of the hybrid in a four-wire terminating set is conveniently measured by a technique involving the measurement of transhybrid loss (THL) with the two-wire port short-circuited.

Transhybrid loss is measured by transmitting a known amount of weighted noise or a single-frequency power between the two four-wire ports of the four-wire terminating set with a short circuit on the two-wire line immediately adjacent to the terminating set. Since the return loss in this case is zero, the input power in dBm minus the output power in dBm is twice the normal terminating set loss, a total of 6.5 to 8.0 dB, caused by the power divisions in the hybrid and the inherent loss of the coils. The measurement also includes the loss of the cable and pads associated with the four-wire terminating set receiving and transmitting ports. The loss as measured for weighted noise is used as the correction factor when the echo return loss is determined. For the determination of the singing point, the loss used as the correction factor is that measured at 1000 Hz by use of general purpose test equipment. The singing return loss correction factor is determined by use of a return loss measuring set at the high band setting, 2500 to 3200 Hz.

After the transhybrid loss correction factors are measured, the echo return loss, singing point, or singing return loss of a terminated two-wire line connected to the four-wire terminating set can be determined.

Echo Return Loss

The echo return loss at a four-wire terminating set is determined from the weighted average of the return loss at all frequencies in the echo range, 500 to 2500 Hz. It is the difference between the weighted noise correction factor and a weighted noise measurement obtained with the trunk under test terminated and connected to the four-wire terminating set.

Singing Point and Singing Return Loss

The singing point is determined from the return loss at a critical frequency, usually near the upper or lower end of the 200- to 3200-Hz range. The singing point is the difference between the transhybrid loss correction factor for a single frequency (1000-Hz transhybrid loss) and a similar measurement made by using a singing point test set with the terminating set connected to the terminated trunk under test.

The use of a singing point test set involves connecting a voice-frequency amplifying device directly between the four-wire receiving and transmitting ports of a four-wire terminating set and increasing its gain until singing starts. Since a sing starts when the gain at some frequency becomes greater than the loss at that frequency, the test set indication is the measurement of the gain required for the singing to occur and is taken as the margin in dB against singing.

When the singing return loss is measured by means of a return loss measuring set, the transhybrid loss may be compensated for in the test set calibration. The singing return loss is read without correction in both the low band, 200 to 500 Hz, and the high band, 2500 to 3200 Hz, and the lower of the two readings is used as the singing return loss. Return loss measuring set measurements involve connecting a noise generator and appropriate filter to the transmitting port of a four-wire terminating set and measuring the returned power at the receiving port.

Two-Wire Switching Path Capacitance

The measurements for determining office cable shunt capacitance are made by using a 2000-Hz test tone or the return loss measuring set in the high band. Measurements at 2000 Hz or higher are more accurate than those at a lower frequency because of the various series capacitors and bridged inductors that may be in the trunk equipment. The impedance effects of these components are negligible at high voice frequencies. In addition, since the office cabling capacitance is a shunt capacitance, it has a greater effect and is therefore more easily measured at higher frequencies.

Through office path capacitances are measured from the four-wire terminating set of one intertoll trunk to the four-wire terminating set (terminated at the four-wire side) of another intertoll trunk.

Terminal office path capacitances are measured from the four-wire terminating set of an intertoll trunk to a termination at the toll connecting trunk appearance. When a toll connecting trunk serves a class 5 office in the same building with the toll switching machine, the trunk is terminated by dialing the class 5 office balance test termination. When a toll connecting trunk serves a distant class 5 office, a termination must be placed at (1) the four-wire side of the four-wire terminating set located nearest the toll switching office on four-wire facilities, (2) the office side of impedance compensators in loaded cable, or (3) the toll switching office side of 2-dB pads when these are required in nonloaded cable.

To measure the capacitance, the two-wire path is connected by machine switching, operator switchboard connection, or a testboard connection to the two-wire side of a working intertoll trunk or balance test circuit four-wire terminating set. The far end of the two-wire path must be terminated as discussed so that it includes all the office cable. When the connection is complete, a 2000-Hz test tone is applied to the four-wire terminating set receiving port and a power detector is connected to the transmitting port. The detector is used to indicate a return loss value without consideration of the transhybrid loss. Capacitance is then added to the four-wire terminating set compromise network impedance by adjustment of the NBO capacitor. When the compromise network impedance is similar to the two-wire path impedance, the detector indicates a maximum return loss. At this setting, the NBO capacitance value is approximately equal to the cable capacitance. The adjustment may be made by changing the strapping of the NBO or by the substitution and adjustment of an external variable capacitor.

10-5 APPARATUS CONSIDERATIONS

Switching offices and switchboards are given nominal impedances based on whether they are to switch mostly loaded cable facilities whose impedances are approximately 900 ohms or open-wire and carrier facilities whose impedances are approximately 600 ohms. These values of impedance do not reflect actual switching office equipment impedance but are standardized values which are based on average impedances of trunk and subscriber facilities connected to the office. With few exceptions, class 4 and 5 offices are considered as 900-ohm offices and all class 1, 2, and 3 four-wire offices are considered as 600-ohm offices. (Toll switchboards are also designed for

600 ohms.) The impedance of the crossbar tandem switching system, often used as a two-wire toll switching machine, was initially selected to be most representative of the type of facilities used for metropolitan tandem switching. When this system was designed, the facility commonly used for outgoing trunks in the majority of metropolitan areas was H88-loaded cable. Therefore, the nominal impedance of 900 ohms was selected for crossbar tandem offices. Repeating coils or four-wire terminating sets are used so that a common (nominal) impedance is presented by all trunks at the switching point.

Built-In Four-Wire Terminating Circuits

The N- and T-type carrier system channel units and the E-type SF signalling units that have built-in terminating circuits cannot meet the more stringent through balance objectives because of poor two-wire input impedance characteristics at certain frequencies. However, they meet the minimum objectives for terminal balance. External 1-type four-wire terminating sets are used where better performance is required. In addition, the E- and F-type SF signalling units that have built-in terminating circuits have a 10:1 line impedance ratio instead of the usual 1:1. Building-out capacitors are included in these circuits as part of the compromise network portion to obtain the required NBO for balance. However, because of the 10:1 ratio, the actual value used is approximately one-tenth of the office NBO value.

Repeating Coils

When repeating coils are present in a two-wire line to derive signalling or to transform impedances, the degree of balance that can be obtained is limited. For instance, a 1:1 ratio coil has some leakage reactance and reduced inductance, particularly noticeable at the lower frequencies, because of saturation. The repeating coil also adds to the series resistance of a circuit. These effects modify the two-wire line impedance presented to four-wire terminating sets by different amounts over the voice-frequency range and reduce the average degree of balance obtainable.

If the coil has other than a 1:1 impedance ratio, an additional limitation exists. For instance, if a 1.5:1 ratio coil is used to interconnect a circuit of 900 ohms in series with a 2.16 μF and a circuit of 600 ohms in series with 2.16 μF, the capacitance components of the impedances are not in proper proportion. That is, the 600 ohms

and 2.16 μF transformed through an ideal 1.5:1 coil is equivalent to 900 ohms and 1.44 μF. This capacitance imbalance is in addition to that caused by leakage reactance, series reactance, and self-inductance effects in the repeating coil itself. Therefore, trunking arrangements that use repeating coils should not be employed in through-type intertoll-to-intertoll connections since these connections require a high degree of balance to satisfy VNL objectives. The use of repeating coils in trunk relay circuits for impedance matching or signalling purposes should be limited to toll connecting trunk applications. Trunk arrangements employing more than one repeating coil may not meet terminal balance requirements.

As previously mentioned, crossbar tandem offices are considered to have a 900-ohm impedance while associated toll switchboards are designed to have an impedance of 600 ohms. This impedance difference necessitates that (1) any two-wire path from the switching machine to a switchboard must have an impedance transformation made with a 1.5:1 ratio repeat coil, (2) all four-wire terminating sets on intertoll trunks must be equipped with compromise networks, each consisting of a 900-ohm resistor in series with a 2.16 μF capacitor, and (3) all four-wire terminating sets in switchboard-terminated trunks must be equipped with compromise networks consisting of 600-ohm resistors in series with 2.16 μF capacitors. One result of having machines and switchboards with different impedances is that the NBO capacitance value across the compromise network of a four-wire terminating set at the switchboard end of a four-wire tandem trunk must be approximately 1.5 times as large as the NBO capacitance values across the compromise network in a machine-terminated trunk.

Since inward operator trunks may be part of both through and terminal connections, the design of trunk relay units used for this application includes a repeating coil. Terminal connections involving this trunk generally meet terminal balance requirements. Where through connections via the switchboard are completed by using an inward operator trunk and a four-wire tandem trunk, the four-wire tandem trunk provides impedance matching between a machine and its switchboard without introducing a second repeat coil. With this arrangement, minimum through balance requirements may be met but median requirements cannot be met because of the repeating coils in the inward operator trunk. Because of the small volume of through switchboard traffic, less than median performance has been allowed.

Two-wire tandem trunks also use trunk equipment with repeating coils. This type of trunk is used to complete outgoing terminal traffic from the switchboard and generally must meet terminal balance requirements. Two-wire tandem trunks used to complete through connections do not meet minimum through balance requirements. Repeating coils appearing in a two-wire line path must also be equipped with properly valued midcoil capacitors to obtain acceptable impedance characteristics. The VNL objectives for echo return loss, singing point, and singing return loss are based on a proper choice of these capacitors. The midcoil capacitors provided in the secondary intertoll and two-wire tandem trunk relay equipment are designed to obtain an acceptable compromise in impedance transformation between the intertoll and toll connecting trunk relay equipment for impedance matching and/or to derive signalling leads. At the class 4 office end, each of these trunks is provided with midcoil capacitors that provide satisfactory impedance in the intertoll trunk direction. This results in reduced return loss performance in the toll connecting direction but the less stringent terminal balance requirements can be met.

Signalling Lead Capacitors

The two-wire line hybrid coil windings in four-wire terminating sets are frequently used to connect dc signalling circuits to the two-wire line path in an office. In this case, a 1-μF capacitor must be bridged across the A and B leads of the four-wire terminating set to provide ac continuity for the voice path and dc isolation for the signalling path. A value of 1 μF gives the two-wire line side of the terminating set hybrid junction the desired impedance characteristic for interconnection to another terminating set. When used to provide a signalling path, this capacitor may be located in the four-wire terminating set or in the trunk relay equipment, depending upon specific equipment arrangements. In all cases, it is necessary to ensure that the capacitor value is 1 μF, that only one capacitor exists in the two-wire line, and that a 1-μF capacitor is also provided in the two-wire network line of the hybrid to maintain proper impedance characteristics.

Figure 10-4 shows that when the 1-μF capacitor is located in the trunk circuit, the loop resistance of the A and B leads from the four-wire terminating set to the trunk circuit is included in the total

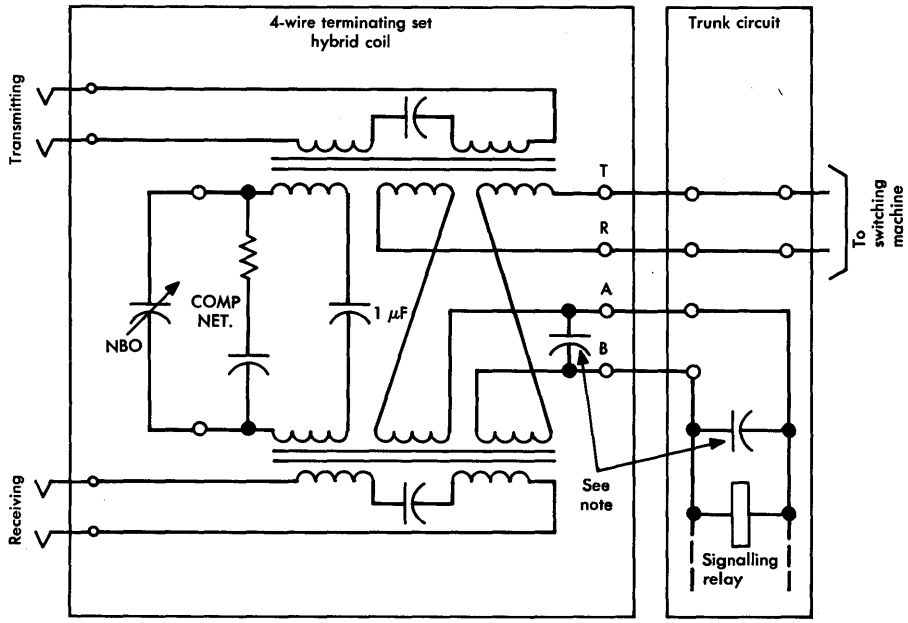

Note:
1 μF capacitor at either position but not both.

Figure 10-4. Typical four-wire terminating set hybrid coil arranged for DC signalling.

cabling resistance of the two-wire path. Some types of equipment also have inductors in the A and B leads for additional impedance isolation. To improve signalling, the class 5 office ends of four-wire toll connecting trunks generally have a 4-μF capacitor across the A and B leads. However, the difference in the impedance characteristic in these cases can be ignored since no connection to other four-wire terminating sets is required.

Trunk Relay Equipment

All intertoll-type relay equipment should have certain features to assure satisfactory transmission performance. First, each trunk should have adjustable DBO capacitors bridged across the transmission path. If a two-way trunk or multiple access trunk is involved, a DBO capacitor is required in each transmission path. In addition, idle circuit terminations must be used to provide the same nominal im-

pedance as a two-wire line termination when the trunk relay equipment is idle. Because of the low-loss design of switched network trunks, the termination must be provided to prevent possible singing in the idle condition. Finally, any signalling relays bridged to the transmission path must have high enough inductance (with their normal operating currents) to have a negligible effect on the circuit impedance in the frequency range of 200 to 3200 Hz.

Impedance Compensators

An impedance compensator is an electrical network used to make the sending-end impedance of a loaded cable pair more uniform over the voice-frequency range and more nearly equal to the impedance needed at the toll switching office, i.e., 900 ohms in series with 2.16 μF. An impedance compensator should be provided on all toll connecting trunks that utilize loaded cable.

Most loaded cables are designed so that the electrical length from the toll office to the first load point is equal to one half the length of a full loading section. An analysis of the impedance characteristic of a half loading section shows that the impedance increases with frequency [2]. Since the impedance of the compromise balancing network in the four-wire terminating set is essentially constant with frequency, the increase in line impedance results in low return losses and poor terminal balance as the cutoff frequency of the cable pair is approached.

The impedance compensator (837-type network) may be adjusted to build out the trunk cable pair impedance to appear as a 900-ohm resistor in series with a 2.16 μF capacitor over the voice-frequency band when the trunk is terminated in a precision network at the class 5 office end. All lengths of cable end sections up to 5000 feet can be built out by adjustment of the internal line build-out capacitors of the compensator. The 837A network is used on most toll connecting trunks where the DBO capacitor is located in the trunk relay equipment. This network has adjustments to provide line build-out capacitance of values from 0 to 0.101 μF in 0.001 μF steps and low-frequency impedance correction (below 1000 Hz) for 19-, 22-, or 24-gauge cable conductors.

Another network, the 837B, contains two built-in features not furnished in the 837A: (1) a line build-out resistor to correct end-

section resistance of loaded cable in order to improve return losses and (2) drop build-out capacitors for use in trunks which have no trunk relay equipment or where the trunk relay equipment is not provided with DBO capacitors.

The 837B network adjustments of build-out capacitance for office cabling range from 0 to 0.062 μF in 0.002-μF steps. The network also provides low-frequency impedance correction for 19-, 22-, or 24-gauge cable conductors (below 1000 Hz) and build-out capacitors for the cable from 0 to 0.101 μF in 0.001-μF steps. In addition, build-out resistance for the cable from 0 to 196 ohms is provided in 28-ohm steps.

10-6 BALANCING PROCEDURES

The successful completion of balancing an office is a complex and lengthy process which depends on careful preparations, orderly step-by-step measurements, the evaluation of intermediate results, and the completion of all work necessary to satisfy balance criteria. The implementation of each part of the plan reduces the likelihood of distorted results. Echo and singing return loss measurements must be evaluated to verify that intermediate steps have been satisfactorily completed. In the course of the balance work, individual trunks should be investigated if they do not meet requirements or if they differ in performance significantly from other trunks of the same design.

Before the balance tests and adjustments are begun, a certain amount of preliminary work is required. The type of apparatus installed should be verified, the various types of cross-office paths in the office should be sketched, records should be prepared, etc. Terminal balance preparatory work includes verifying that outside plant cable acceptance testing is complete, that impedance compensators are adjusted, that 2-dB pads are present where required, and that impedance matching is provided where required. The preliminary work also includes checking repeating coils for proper turns ratios, proper values of midcoil capacitance, and correct orientation of the ratios with respect to the impedance being matched.

In addition to the test planning, the 1000-Hz loss of trunk relay equipment to be balanced should be measured. The actual measured loss ensures that the trunk equipment meets transmission loss requirements. Balance measurements are of little value when the 1000-Hz loss requirements are not met.

Through Balance

Through balance objectives are given in terms of median and minimum values of echo return loss and singing return loss of all combinations of intertoll through connections in two-wire class 1, 2, or 3 offices. Through balance applies only to the equipment and wiring within an office and is measured from one four-wire terminating set through the office equipment to the other four-wire terminating set of each connection. The four-wire facilities are disconnected at the four-wire terminating set and replaced by test terminations during the balance measurement process.

To adjust an office initially for through balance, the longest cross-office path, i.e., the path with the greatest capacitance, must be found as a first step in establishing the office NBO capacitance. This path consists of a connection from the longest incoming intertoll trunk to the longest outgoing intertoll trunk. The connection may be by way of the switching machine or switchboard. Through connections via the switchboard involve secondary intertoll trunks. Such a through connection may involve an incoming intertoll trunk, a machine-to-switchboard (operator assistance) trunk, and a switchboard-to-machine (toll tandem) trunk to an outgoing intertoll trunk. The longest of each of these trunk types is determined by visual inspection, office records, or bridge-type capacitance measurements.

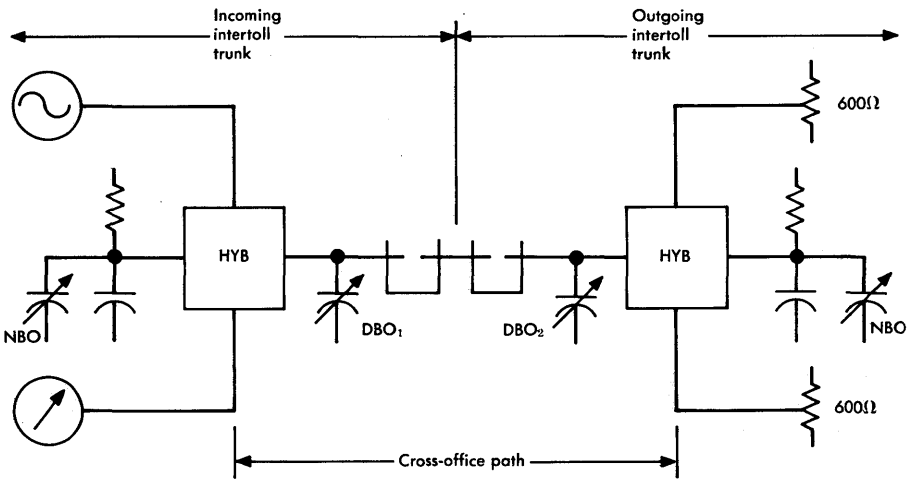

Figure 10-5. Through balance capacitance measurement.

Next, cross-office capacitance measurements must be made. A through connection is established for each possible configuration, and a capacitance measurement is made as shown in Figure 10-5; the longest outgoing intertoll trunk is terminated at the four-wire side, an oscillator is connected to the transmitting leg of the longest incoming trunk, and a detector is connected to the receiving leg. The oscillator-detector combination is typically a return loss measuring set. The NBO of the longest incoming trunk is then adjusted for maximum return loss at a given frequency. The value of the NBO capacitance then represents the capacitance of the two-wire line of the longest cross-office path of a through connection. This value plus some allowance for growth is then chosen as the NBO for the office. The growth factor should allow for future additions of switchframes, switchboard positions, or rearrangements in the switchboard multiple that would increase the length of the cross-office path. Where information is lacking, a factor of 10 percent should be used.

The chosen value of NBO for the office is strapped into the balancing networks of all four-wire terminating sets in the office. The DBO capacitors must then be adjusted on all trunks in the office under the same test configuration. The DBO of each incoming trunk is adjusted for maximum return loss at a given frequency when the trunk is connected to the longest outgoing trunk or to a test termination built out to simulate the longest outgoing trunk. A reference incoming trunk is then connected (by dialing) to each outgoing trunk and the DBO of the outgoing trunk is similarly adjusted. In this manner, all two-wire lines are built out to the same electrical length.

Figures 10-6(a) and (b) illustrate the typical through office connections in a crossbar tandem office that must meet through balance objectives. Figure 10-6(a) shows the direct machine-switched connections, whereas Figure 10-6(b) shows an incoming trunk machine-switched to an operator assistance (secondary intertoll) trunk and completed through the office from the switchboard multiple by way of a four-wire tandem trunk.

In the connections of Figure 10-6(a), the capacitance value for NBO A or NBO B (office NBO value) should be the sum of C1 and C2 plus 10 percent (as a growth factor) when C1 and C2 represent the capacitance of the longest paths in the office. This value, in general, satisfies conditions in the connections shown in Figure 10-6(b) where the nominal impedance of the machine is 900 ohms and that of

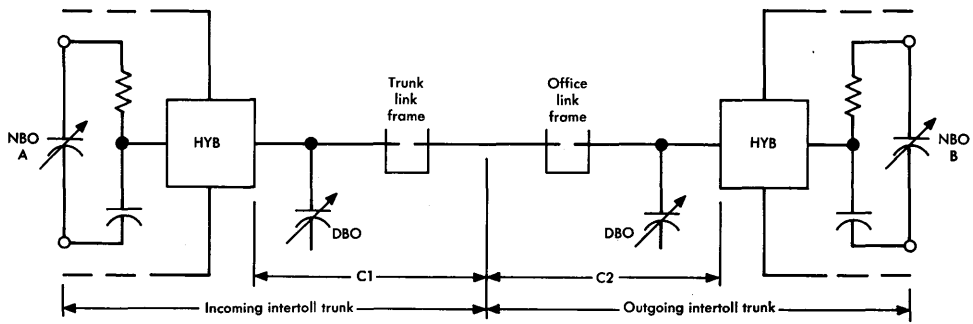

(a) Machine-switched connection

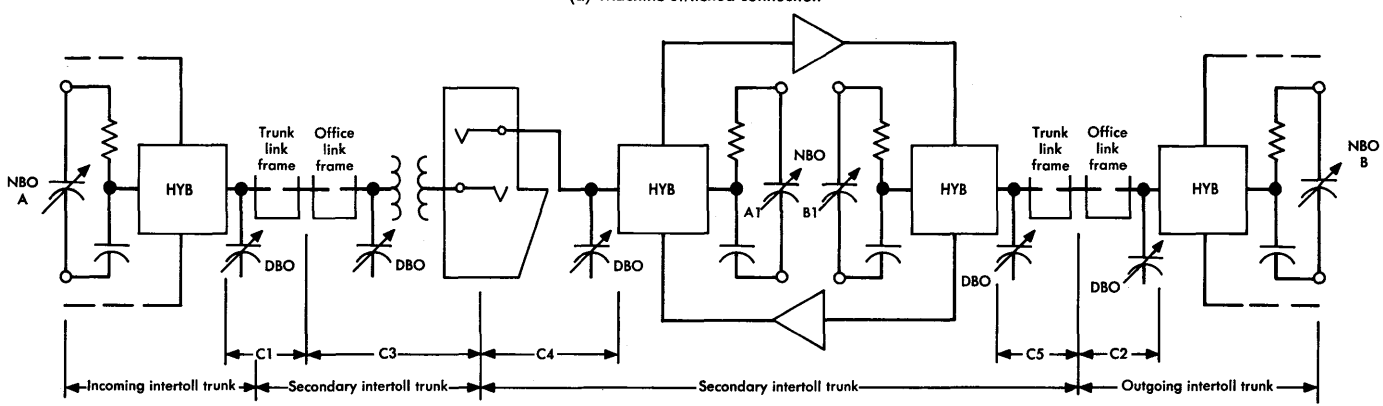

(b) Connection through switchboard

Figure 10-6. Typical through balance connections.

the switchboard is 600 ohms (the impedances are transformed in the operator assistance trunk). In these connections, the sum of C1, C3, and C4, when properly built out, is equal to the capacitance value of the office NBO, A or B. Also, the value of NBO A1 is approximately 1.5 times greater than A or B due to the difference in nominal impedances. The NBO B and B1 capacitance values should each be equal to the office NBO value.

As a result of the through balancing process, all NBO capacitors are strapped for the same value and all compromise network impedances are approximately equal. The two-wire line impedances of all incoming and outgoing intertoll trunks are similar but the incoming and outgoing two-wire line DBO capacitances are not necessarily the same values. That is, all incoming intertoll trunks are built out to a similar impedance and all outgoing trunks are built out to a similar impedance. Therefore, the impedance matches at the switchpoint or switchboard interconnection in all through path connections are similar. After the DBO adjustment for each trunk is completed, echo and singing return loss measurements are made in both directions through the office and recorded. The DBO capacitors in Figure 10-6 are all mounted in trunk relay circuits.

Terminal Balance

Since terminal balance concerns the connection of intertoll trunks to toll connecting trunks, the required impedance match is between the four-wire terminating set and the predominantly two-wire toll connecting trunks. In contrast with through balance, the impedance match is not between opposing terminating sets; measurements involve more than the office equipment and wiring. The terminal balance process of adjusting NBO and DBO capacitors minimizes the range of cross-office capacitance but the echo and singing return loss requirements and measurements are specified in the switched condition with the toll connecting trunk connected to a test termination in the class 5 office.

In offices requiring terminal balance only, the average intertoll-to-toll connecting path is determined and used as a compromise value for network build-out. In order to obtain a true average path length for NBO purposes, a system of weighting based on size of groups, size of samples, traffic usage, etc., would have to be used. This would be a difficult and complex procedure. Therefore, a value between the

longest and shortest path is generally used as an acceptable compromise value for the office cable capacitance. Capacitance measurements made on a sampling basis are adequate for terminal balance. As a general rule, the measured values do not have a normal distribution but tend to separate into groups. Capacitance measurements are made on a sample of the shortest and longest trunks of each type of toll connecting facility. As illustrated in Figure 10-7, these may include four-wire (VF or carrier) trunks, two-wire loaded trunks with impedance compensators, or short nonloaded trunks with 2-dB pads. It is important to include paths through a switchboard as well.

At least one sample should be tested for each category of trunking. Furthermore, each of these categories should be subdivided according to the type of signalling system and the type of equipment and facilities used on the trunks, and at least one sample from each subdivision should be tested. Recommended sample sizes are shown in Figure 10-8. The capacitances measured on the connections in a given sample should all have approximately the same value. A wide range within a sample may indicate a trouble condition or might indicate that an incorrect subdivision of connections was sampled. In the latter case, further subdivision is necessary and additional samples should be taken.

Two-Wire Class 4 Offices. Capacitance measurements for terminal balance are made to a test termination (600 or 900 ohms in series with 2.16 μF) with the toll connecting trunk disconnected at the point of termination, as previously described. A connection is established to each toll connecting trunk to be measured from an average length incoming intertoll trunk or from a balance test circuit built out to simulate the average length incoming intertoll trunk. The NBO on the intertoll trunk is adjusted for maximum return loss at a given frequency and the capacitance value is recorded. The compromise value of office NBO is chosen from these measurements.

The use of a compromise value NBO means that return losses somewhat less than maximum can be expected on the longest and shortest switching paths. This reduction in return loss can become serious if the deviations in switching path capacitance are too great; therefore, capacitance differences should be held to within a relatively narrow range. For example, if the capacitance of the longest measured path were 0.032 μF and the capacitance of the shortest measured path were 0.014 μF, the accepted compromise (midrange path) would be a capacitance of 0.023 μF. Thus, the NBO value for the office would

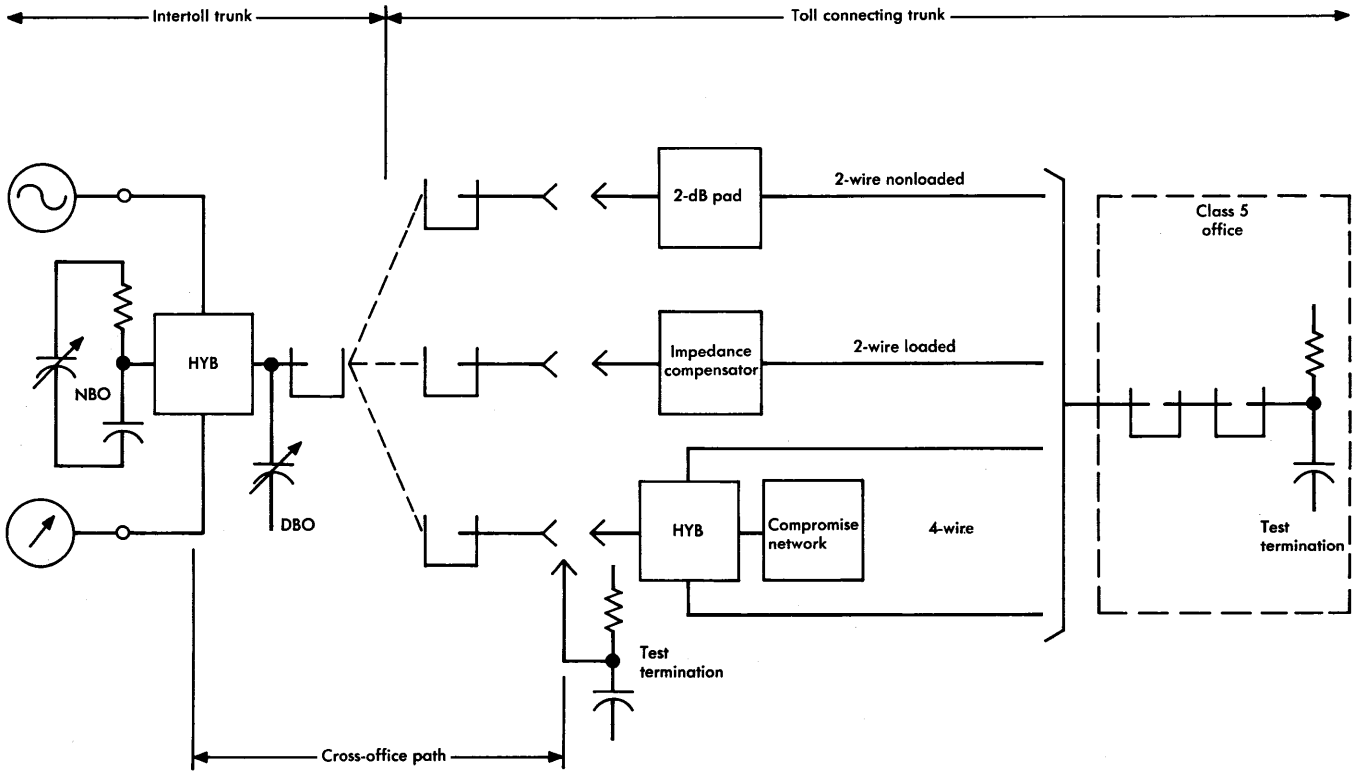

Figure 10-7. Terminal balance capacitance measurement.

TOTAL NUMBER OF TRUNKS	NUMBER IN SAMPLE
5 or less	All trunks
6 to 10	5
11 to 15	6
16 to 25	7
26 to 50	8
Over 50	$\approx$ 18% of total

Figure 10-8. Recommended sample sizes for terminal balance measurements.

be 0.023 μF. The difference between the capacitances of the longest and shortest paths should not exceed a maximum range of 0.025 μF or echo and singing return loss requirements cannot be met.

Where the range is greater than 0.025 μF, the shorter paths are excluded from the determination of the compromise value of NBO and the DBO capacitance value is added to the shorter paths to bring them up to the compromise value. The use of DBO capacitors in the example would not be necessary. Figure 10-9 illustrates the method

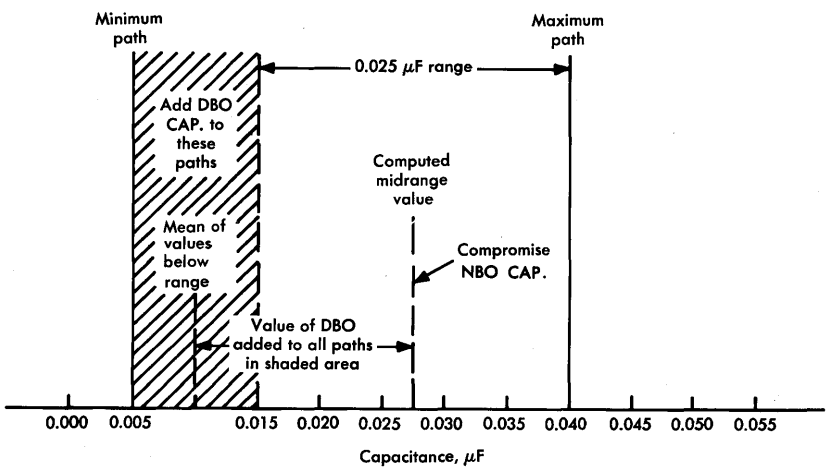

Figure 10-9. Example of determination of NBO and DBO capacitances in a class 4 office.

used to determine office NBO where the range of cross-office paths exceeds 0.025 μF. In this example, the longest path measured is 0.040 μF and the shortest is 0.005 μF. All measured values below $0.040 - 0.025 = 0.015$ μF are excluded and the midrange path is then determined to be $(0.040 + 0.015)/2 = 0.0275 \approx 0.028$ μF, which therefore becomes the compromise office cable capacitance and establishes the NBO value for the office. A DBO capacitor is added to each path below 0.015 μF to build it out approximately to the compromise value of 0.028 μF. In the example, the DBO value is $0.028 - 0.010 = 0.018$ μF.

Figures 10-10 and 10-11 illustrate crossbar tandem office connections that must meet terminal balance objectives. Figure 10-10 shows an incoming intertoll trunk connection to an outgoing toll connecting trunk and an intertoll to incoming toll connecting trunk connection. Figure 10-11 shows a connection of the same incoming and outgoing trunks through an operator switchboard.

Two-Wire Class 3 and Higher Ranking Offices. In class 3 and higher ranking offices which also perform class 4 switching functions, the incoming and outgoing intertoll trunks must meet through balance objectives which are more stringent than terminal balance objectives. Since the intertoll trunk portions of a connection have already been balanced for through connections, drop build-out work is done only on the toll connecting trunk portion of the connection.

The office NBO capacitance is determined by the through balance procedure and is usually larger than that required for best balance on connections to toll connecting trunks. It is usually necessary to add DBO capacitance to some or all toll connecting trunks. Drop build-out capacitors are chosen for each sampled group of toll connecting trunks. The sampled groups and sizes should be the same as those recommended for class 4 offices. The DBO capacitance value chosen for all the trunks of a given type should be the arithmetic mean of the sample, i.e., the summation of sampled capacitance divided by the sample size. The DBO capacitors on sampled trunks are adjusted for maximum return loss when the toll connecting trunks are connected to an intertoll trunk that has been adjusted to meet the through balance requirements.

Four-Wire Offices. Terminal balance in four-wire offices is similar to that for two-wire offices. The same procedures and considerations

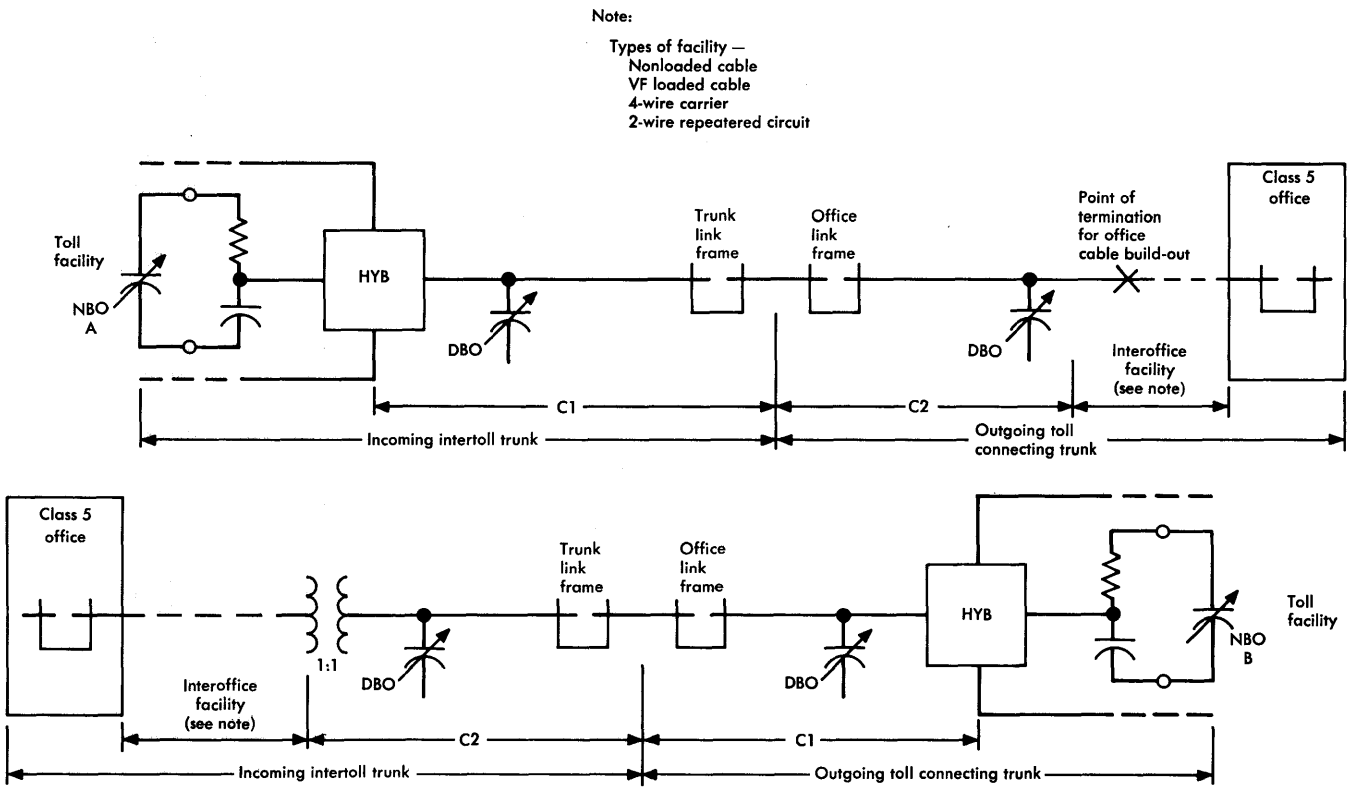

Figure 10-10. Typical machine-switched terminal balance connections.

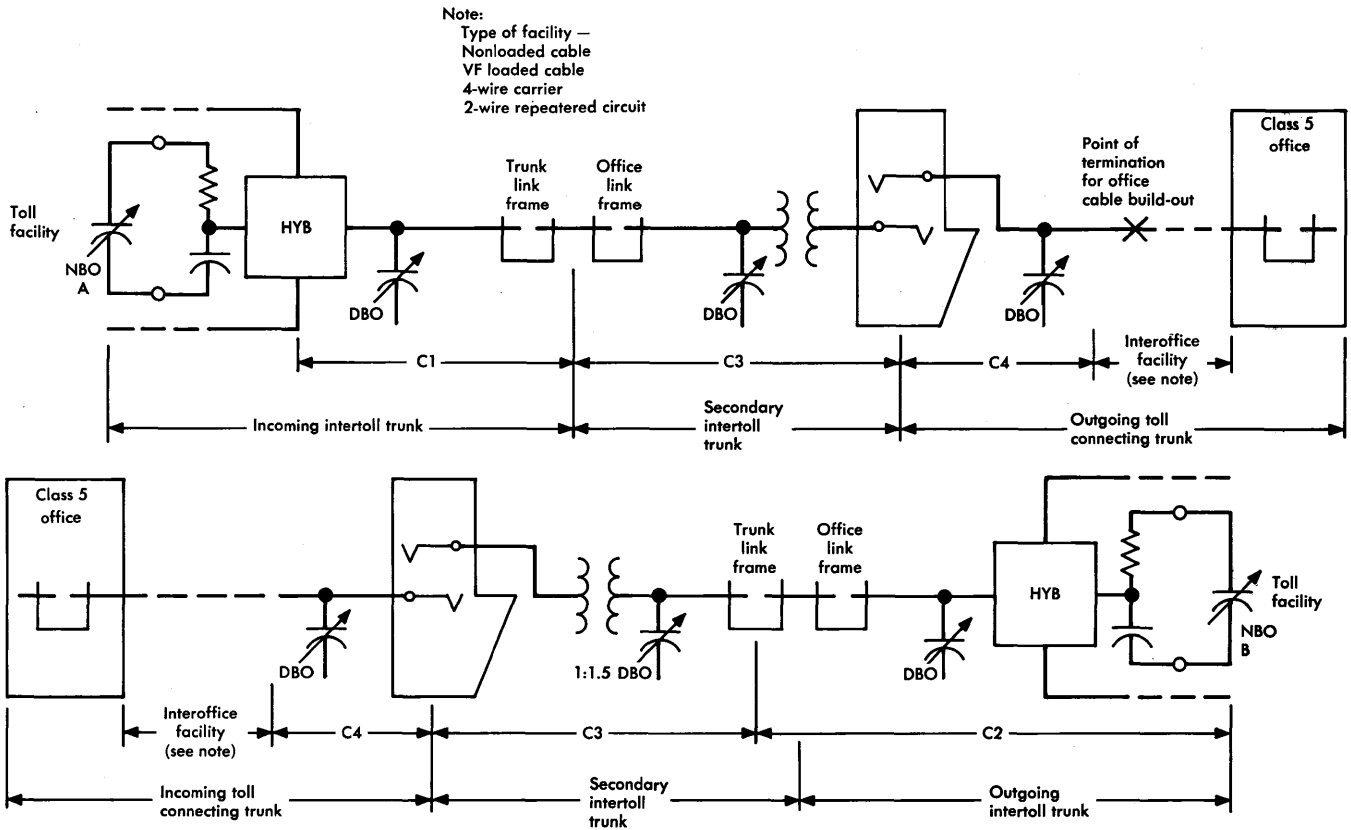

Figure 10-11. Typical terminal balance connections including operator switchboard.

are applicable. There are, however, three distinctions that deserve mention. First, measurements are made from an incoming intertoll trunk even though the four-wire terminating set is on the toll connecting trunk on the outgoing side of the switching machine. The test points are chosen so that the test connections simulate the actual connections used by customers. Furthermore, the test arrangements should be chosen so that all factors influencing balance are included in the balance measurements. Second, precision balance networks should be used in lieu of the compromise network used on two-wire loaded cable facilities. The precision balance network is adjusted to build out the cable end-section capacitance as determined from loaded cable structural return loss testing. Additional build-out capacitance is added in the normal terminal balance procedure to account for the difference between office cable capacitance from the main distributing frame to the line terminals of the trunk hybrid coil and office cable capacitance from the network terminals of the trunk hybrid coil to the precision network assigned to the trunk. Third, where high-loss toll connecting trunks terminate at a toll office, the losses are typically adjusted to be 10 dB by the use of fixed pads in both sides (transmitting and receiving) of the four-wire connection to the trunk. Thus, echo and singing return loss measurements are increased by these pads. Since the objectives given in Figure 10-3 apply to trunks designed for low loss, VNL + 2.5 dB, these objectives must be increased by the amount of the transhybrid loss, for example, 7 + 7 dB, where high-loss trunks are involved. Thus, a typical echo return loss requirement of 18 dB at a point to which the trunk loss is VNL + 2.5 dB is satisfied when the return loss measured at the outgoing switch is $18 + 7 + 7 = 32$ dB. This test objective then is an *echo requirement* differing from that obtained by a strict definition that depends on a quantity of returned energy. Other test objectives are modified in the same manner.

Large Class 5 Offices. Balance procedures do not apply to class 5 offices. However, where a class 5 office has a predominance of four-wire toll connecting trunks and a range of cross-office capacitances greater than 0.025 μF, it may be impossible to meet terminal balance requirements at the class 4 office on which it homes unless a fixed NBO is provided at the class 5 office to narrow the range of return losses presented to the class 4 office. Where a capacitance range of 0 to 0.050 μF exists, an NBO of 0.025 μF may be used. Where cross-office paths greater than 0.050 μF exist at the class 5 office, terminal

balance procedures are necessary with a recommended maximum NBO of 0.050 μF. The use of an NBO at a class 5 office should not be considered unless terminal balance requirements cannot be met at the class 4 office on which it homes.

Balance Verification Tests

To complete the balance work in an office after the NBO and DBO capacitors have been adjusted, several other tests should be made on all toll connecting trunks. First, a 1000-Hz transmission loss test should be made (in both directions if trunks work on hybrid-type repeaters or carrier facilities). Also, an echo return loss test is required. Finally, a singing point or singing return loss test must be made.

Although not technically a balance objective, a transmission measurement should be made on each trunk connection before echo return losses, singing points, and singing return losses are measured. The measured loss should be within ± 1.0 dB of the expected measured loss for the trunk. The purpose of the test is to ensure that the test connection has been made correctly and that the losses are within limits. To permit more practical methods of measuring the echo return loss, singing point, and singing return loss on toll connecting trunks, a compromise termination has been selected for use at class 5 offices. This termination is used to represent terminated subscriber loops in the off-hook condition and consists of a 900-ohm resistor in series with a 2.16-μF capacitor. These values are considered to be representative of an average subscriber loop. Terminal balance test requirements are based on the use of this termination.

No. 1 ESS Offices

Where No. 1 ESS is used for toll switching, the balancing procedure is different from others presented in this chapter; however, the principles and objectives remain the same. The differences result from the basic design of the ESS office. One design factor is that 26-gauge office wiring is used as opposed to 22-gauge office wiring used in electromechanical switching offices; therefore, it would be very difficult to stay within the maximum resistance limitation. Also, the addition of DBO capability is not compatible with the physical design of most No. 1 ESS trunk circuits. Therefore, hybrids are made part of the intertoll trunk circuits which places them physically

closer to the point of switching and minimizes the length of the cross-office path. In addition, network build-out resistance is provided in the hybrid balancing network as well as network build-out capacitance.

The balancing procedure involves setting the impedance (both resistance and capacitance) of each network for optimum return loss to a test connection that consists of the two-wire path between the hybrid and the center of the switch, plus some additional amount of cabling to the test termination of 900 ohms in series with 2.16 μF. This additional amount of cable has been chosen to be 400 feet to allow for a maximum growth and still give satisfactory results on the shortest paths. Physical restrictions on the office equipment layout are necessary so that the longest path from the center of the switch to a hybrid is less than about 800 feet. This ensures that the maximum mismatch ($\pm$400 feet) still allows return loss requirements to be met.

Engineering Responsibilities

There are several requirements for certifying that the trunks serving an office are operating at VNL and that the office meets balance objectives. Fulfillment of these requirements entails a continuing responsibility that begins with satisfactorily installed plant, trunk design, and office layout. Then, the utilization of new equipment, designs, and procedures must be analyzed for their possible effects on balance.

The NBO value must be selected on the basis of accurate measurements before time and money have been spent on wiring and adjusting trunk equipments and allowance must be made for office growth. On-site support and assistance during the balancing operation must be provided and high-quality testing capability must also be ensured.

Switching and equipment rearrangements are often made in a manner such as to cause changes in both resistance and capacitance which affect balance. Equipment additions may establish new cross-office paths that have capacitance values exceeding the office NBO capacitance. Also, traffic requests for efficient switchboard multiples or for the installation of multiples to added switchboard positions may have a direct and deleterious effect on the office balance. To avoid expensive rebalancing, all trunks must be tested and maintenance test procedures must be properly followed.

Finally, the balance component of the trunk transmission maintenance index must be monitored. Trend analysis by office can be used to identify areas for corrective action before service deteriorates. Since balance surveys and index data are among the few tools available for the identification of weak spots, it is extremely important that such surveys and measurements be made when scheduled and with great accuracy.

Certification of Balance

To qualify as a balanced office, the transmission circuits in and terminating at the office must meet a number of criteria for both initial certification and for subsequent surveys:

(1) The office NBO value must be approved and may not exceed 0.080 μF.

(2) Trunks that do not meet VNL objectives are classified as not meeting minimum balance requirements.

(3) Intertoll trunks are assigned to four-wire facilities. Those that are not must be classified as not meeting minimum balance requirements.

(4) For a balance survey to be valid, balance data on all trunks must be available. Trunks for which recorded measurements are not available are classified as not meeting minimum requirements for echo return loss and singing return loss. Thus, if up-to-date trunk balance records are not available, an office can not be surveyed and, as a result, can not be certified. Since the lack of certification degrades the trunk transmission maintenance index (TTMI), it is essential that balance work be performed on new circuits and that up-to-date records be maintained.

(5) At least 50 percent of all balance measurements for each class of trunk (primary intertoll, secondary intertoll, intrabuilding toll connecting, and four-wire and two-wire interbuilding toll connecting) must be equal to or greater than the median requirement. Not more than two percent of the measurements for each class of trunk may be below minimum requirements.

(6) All trunks with measurements below turndown limit have been removed from service for corrective action.

REFERENCES

1. American Telephone and Telegraph Company. *Telecommunications Transmission Engineering,* Volume 1, Second Edition (Winston-Salem, N. C.: Western Electric Company, Inc., 1977), Chapter 4.

2. American Telephone and Telegraph Company. *Telecommunications Transmission Engineering,* Volume 1, Second Edition (Winston-Salem, N. C.: Western Electric Company, Inc., 1977), Chapter 5.

Chapter 11

Auxiliary Services

The objectives for loop and trunk plant have been derived on the basis of directly dialed calls; however, a substantial number of calls require operator assistance. Operators provide auxiliary services such as directory assistance, call intercept, delayed calls, and conferencing. Provision of these and other auxiliary services demands the application of supplementary design objectives consistent with reasonable control of associated costs in order that transmission quality on auxiliary service trunks may be comparable to that on directly dialed connections.

Centralized operator connections to the network are provided by the Traffic Service Position System (TSPS), the Automatic Intercept System (AIS), automatic call distributors (ACD), and concentrators to provide combined centralized directory assistance and intercept services. By taking advantage of mechanization, these systems are used to optimize the cost of operator services in most metropolitan areas and are now being used to serve even entire states. However, the centralized aspects of these services also necessitate new approaches to the transmission design for associated facilities so that the additional links required for access to the centralized locations and further trunking to remote operator positions do not degrade transmission quality compared to other switched message network standards.

11-1 OPERATOR FUNCTIONS

Mechanization of local and toll office switching has not yet eliminated the need for operator assistance in placing calls such as person-to-person, collect, coin, etc., and for number-service-related functions.

Therefore, provisions must be made to gain access to operator positions providing these functions. These positions may be cord-type switchboards or consoles associated with centralized access systems.

Call Assistance

Standard trunking configurations for the present switched message network normally result in operator facilities that provide assistance functions being considered either class 5 (local) or class 4 (toll) for all except overseas services. Overseas operators are provided access at higher levels in the network hierarchy.

Operator assistance functions are provided for operator originations and completions. Since most calls are completed by switching machines, only originating operator positions are required at which all local and toll call assistance functions are provided. In addition to assistance in call origination, operators may perform other functions such as call intercept, verification, sender supervision (sender monitor and permanent signal), trouble observation and test, coin supervision, coin overtime, coin zone dialing, etc. Many of these functions require special handling and may be confined to a few switchboard positions.

With older type systems and equipment, the basic toll functions are performed by operators designated *outward operator* and *inward operator*. The outward operator is reached either manually or by a special code to originate calls over the network and to provide for the recording of charges. The inward operator, at the terminating end of the call, can be reached only by a distant operator. In the past, a through operator provided assistance for manual call routing at a control switching point (CSP) and could only be reached by another operator. Except for overseas service, the through operator function is no longer standard although inward operators at CSP locations can function as through operators for emergency completion of calls. Outward, inward, and through operator designations are not used with modern operator services arrangements.

When the called party on an operator-assisted call is unavailable, the operator may be asked to establish the call later (delayed call) and the calling party may disconnect. The operator then acts as an outward operator to reach the called party and as an inward operator to reach the calling party. On a person-to-person call where the called party is unavailable, the calling party may ask that the call be returned (leave-word). In this case, the outward operator designates

by code a team of operators whom the called party is asked to contact. When available, the called party dials the outward operator who then contacts the proper operator team to complete the call on an inward basis.

Number Services

In areas with centralized automatic message accounting (CAMA), automatic number identification (ANI) equipment is often provided at local offices to identify the number of the calling party. When ANI equipment is not available or is overloaded, an operator must ask for the calling party's number and key it into associated switching equipment. The operator then disconnects and automatic equipment takes over. This sequence is designated *operator number identification* (ONI). The operator is called a CAMA ONI operator.

Where *directory assistance* is required, the operator is usually reached by dialing 411 from the local area, 555-1212 from other offices in the same numbering plan area (NPA), or NPA-555-1212 from a foreign NPA for the purpose of providing telephone numbers not otherwise available. In many states, charges are now being made for directory service. As a result, there is an increasing tendency for directory assistance services to be centralized. In these situations, care must be taken so that circuits involved in call charging procedures do not adversely affect transmission.

Call intercept provides operator assistance on calls to unassigned numbers or to lines that are temporarily disconnected or in trouble. In the case of centralized intercept, an intercept operator may be reached over special trunks from the called class 5 office. In AIS, the operator is called in only if the automatic announcement does not satisfy the customer.

11-2 TRANSMISSION CONSIDERATIONS

The basic transmission objective for operator services is that transmission quality for customer connections completed by an operator and connections between customers and operators be as close as practical to that obtained on directly dialed connections. It must be emphasized that transmission quality requires control not only of insertion loss but also of noise, sidetone, contrast, and return-loss-dependent impairments (echo and singing) introduced by circuits provided for operator access. Satisfactory quality is achieved by engineering control of the facilities that are used to provide operator services.

Operator-Completed Connections

Trunks that provide access to outward or inward operators on toll calls often remain a part of the connection when the call is extended by the operator to the called customer. Whether such links are additional to the number of links in a directly dialed call depends on the class relationship between the switchboards and the offices to which they are connected. In modern systems, the operator connection is made by a *released link trunk.* After the operator assistance function is completed, the released link trunk is disconnected from the customer-to-customer connection.

When a switchboard occupies a position in the hierarchy different from that of the switching machine to which it is connected (for example, a class 4 inward or outward toll operator switchboard used to connect a class 5 office to a class 3 or higher office), there are no additional trunks as compared to the number of trunks in a dialed connection. However, a trunk from a class 4 switchboard to a class 4 switching machine does add a link in a connection. Such trunks may degrade loss/noise and echo grades of service unless the design is carefully controlled. These trunks are called *secondary intertoll trunks* (SEC IT). The effects of secondary intertoll trunks for collocated switchboards and toll switching machines and the establishment of secondary intertoll trunks between remote switchboards and toll switching machines must be considered in network transmission studies.

Collocated Manual Switchboards. In the special case where the toll switchboard and its associated switching machine are located in the same building or adjacent buildings, it is permissible to consider the switchboard to be part of the switching machine and to establish trunking between them. The round-trip delay introduced by these trunks is negligible and intrabuilding secondary intertoll trunks are designed to as near zero loss as is practical (maximum 0.5 dB) to minimize the increase of insertion loss. Figure 11-1(a) shows a connection employing both an outward and an inward operator, each collocated with an associated class 4 switching machine. The secondary intertoll trunks from the inward and outward operator positions to the machines are toll tandem or operator junctor trunks. The trunk from the machine to the inward operator is an operator assistance or a leave-word trunk. Note that there are three more links in the connection of Figure 11-1(a) than in the equivalent dialed connection of Figure 11-1(b).

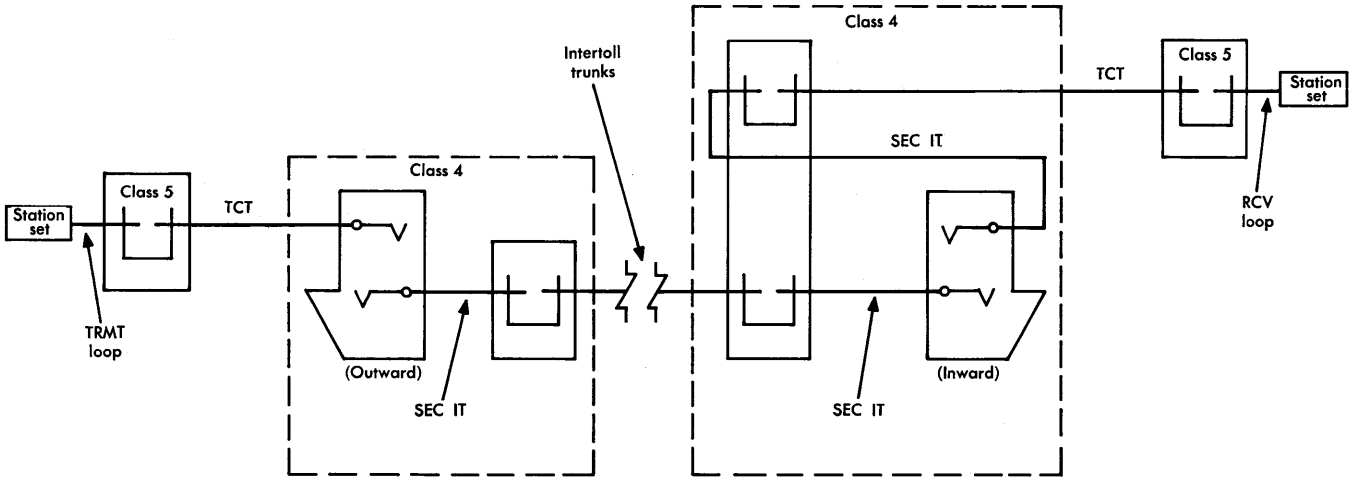

(a) Connection involving outward and inward operator switchboards

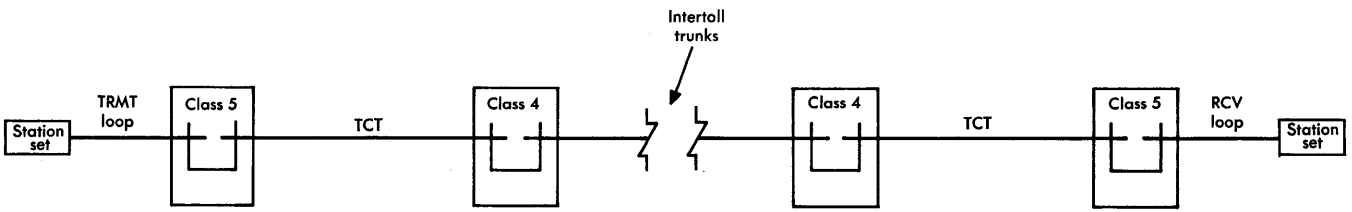

(b) Directly dialed connection

Figure 11-1. Toll connections.

Loss and Noise Impairments. The importance of designing these extra links close to zero loss can readily be seen by examining the loss/noise grade-of-service comparison table of Figure 11-2. Typical statistical values for transmitting and receiving loops, for toll connecting trunks (TCT), and for a representative 100-mile intertoll connection were assumed for the switched network connection of Figure 11-1(b). To represent the connection of Figure 11-1(a), an *assumed* distribution of losses and noise for one intrabuilding secondary intertoll trunk link was inserted between the originating toll connecting trunk and the intertoll connection and two such distributions were inserted for secondary intertoll trunk links between the intertoll connection and the terminating toll connecting trunk. A mean value (μ) of 0.2 dB and a standard deviation (σ) of 0.1 dB were chosen to represent the loss distribution of intrabuilding secondary intertoll trunks when designed to meet objectives. With these values, $\mu + 3\sigma$ equals the maximum allowable value of 0.5 dB. Noise was assumed to be negligible for these links since only intrabuilding VF facilities would normally be used. The remaining grades of service in the table of Figure 11-2 were computed by assuming the mean value of each secondary intertoll trunk loss distribution to be 0.5, 1.0, and 1.5 dB, respectively, with no change in the other parameters.

As shown in the right-hand columns of the table, the presence of three additional secondary intertoll trunk links which meet the loss objective causes negligible degradation in grade of service compared to a directly dialed connection but degradation increases rapidly when the mean loss of secondary intertoll trunks is permitted to increase. A change of 3 to 5 percent in grade of service is deemed significant.

Return Loss Impairments. Properly designed intrabuilding secondary intertoll trunks used in operator-assisted calls contribute negligible degradation in loss/noise grade of service. However, further analysis is needed to evaluate possible degradation in echo, singing, and operator circuit sidetone performance which might occur should these trunks be improperly terminated at either end. The presence of hybrid or impedance transformation coils and other equipment to accomplish proper terminations often produces enough insertion loss so that gain is required to meet the loss objectives. Even if the toll switching machine is two-wire, intrabuilding secondary intertoll trunks must generally be four-wire if established balance objectives are to be met at the toll office.

	LINKS	LOSS, dB		NOISE, dBrnc		OVERALL					
						LOSS, dB		NOISE, dBrnc		GRADE OF SERVICE %	
		μ	σ	μ	σ	μ	σ	μ	σ	GOOD OR BETTER	POOR OR WORSE
Typical short directly dialed connection	TRMT loop TCT Intertoll conn TCT RCV loop	4.2 2.8 1.2 2.8 3.1	1.0 1.0 1.3 1.0 1.0	9.4 19.9 24.3 9.4 −1.0	11.0 6.4 6.2 11.0 12.0	14.1	2.4	24.3	3.8	82	7
Operator-established connections	As above with three SEC ITs (loss and noise)	0.6 1.5 3.0 4.5	0.2 0.2 0.2 0.2	0.0 0.0 0.0 0.0	0.0 0.0 0.0 0.0	14.7 15.6 17.1 18.6	2.4 2.3 2.3 2.5	23.9 23.6 23.1 22.2	3.9 4.2 4.2 4.1	82 79 74 69	8 9 12 14

Figure 11-2. Loss/noise grade-of-service comparison.

Proper terminations are also important for dual appearance trunks, i.e., those to which both switchboard and machine have access. This is especially true where the switching machine is four-wire since hybrids are required to create the two-wire switchboard appearance. Even with two-wire switching machines, impedance transformation may be required, e.g., in a dual appearance trunk with access to both a 900-ohm crossbar tandem machine and a 600-ohm toll switchboard. The interconnection possibilities between switchboards and switching machines must also be taken into account in through and terminal balance procedures. If proper impedances are maintained and if through and terminal balance objectives are met, echo and singing performance on operator-assisted connections are virtually equivalent to the echo and singing performance on calls that are dialed directly.

Remote Operator Positions. Economic and operating efficiencies are causing an increasing emphasis on centralized operator services of all types. Thus, many operator service positions are at locations remote from the points at which services are rendered. In some cases, these positions are served by manual switchboards but the tendency is to utilize released link trunks and key-controlled consoles.

Remote Manual Switchboards. Where remote manual switchboards are economically attractive, a 0-dB loss design is used for remote switchboard secondary intertoll trunks and, if the average noise is held to 25 dBrnc0 or less, these trunks produce no significant degradation in loss/noise grade of service. However, echo grade of service may be affected by secondary intertoll trunks designed to 0-dB loss. Facilities used may be T1-carrier no more than 50 miles long or 22H88 voice-frequency cable pairs no more than 9 miles long.

Remote Consoles. Most remote operator service positions are equipped with key-controlled consoles and are provided access to customer connections by released link trunks. This mode of operation, being used increasingly in TSPS (with and without remote trunking arrangements), AIS, and ACD installations, causes negligible degradation of transmission performance on through connections. However, operator telephone circuits that provide more satisfactory transmission performance than manual switchboard circuits must be used in order to assure satisfactory operator-customer connections.

Customer-Operator Connections

An operator must be able to converse with the calling, and sometimes the called, customer while a connection is being established.

Assurance of transmission performance between customer and operator equivalent to that of directly dialed connections depends on controlling loss, noise, and return loss impairments similar to those just described for operator-assisted connections. However, analysis of customer-operator transmission performance must take into account the following additional factors which are often interdependent:

(1) The insertion loss, noise, return loss, and, in some instances, round-trip delay of links between the point of operator access to the connection in the message network hierarchy and the operator position

(2) The electro-acoustic transmitting and receiving efficiencies of the operator telephone circuit and headset combination

(3) The sidetone performance of the operator telephone circuit and headset combination

(4) For operator-assisted connections, volume contrast between the calling and called customers and the operator while the connection is being established.

These factors are especially important in establishing objectives for facilities and equipment associated with gaining access to remote-operator-position-type systems. However, the general principles can be applied to the analysis of any customer-operator transmission path. Applying these principles requires that the transmission performance of the operator telephone circuit be characterized since the operator circuit differs from that of a 500-type telephone set.

Operator Telephone Circuit Considerations. The components of the operator telephone circuit may vary depending on the type of system. Generally, the circuit consists of a microphone, an earphone, a four-wire transmission path containing various components, and a hybrid or terminating set; the latter is sometimes remote from the operator position if the operator trunk is extended on a four-wire basis.

Electro-Acoustic Efficiency. The transmitting and receiving electro-acoustic efficiencies of operator telephone circuits are used in characterizing the transmission performance of the operator telephone circuit between the headset and the two-wire termination. These efficiencies take into account the performance of the microphone and earphone as electro-acoustic transducers, the losses of the components in the transmission paths between the telephone set and the hybrid

or terminating set, and the losses of the hybrid and the battery and holding circuit on the two-wire side. The efficiencies can be compared directly with the efficiencies of the 500-type telephone set at a similar two-wire termination. This type of information is useful for establishing objectives for the volume at the two-wire ports of operator telephone circuits. These data also facilitate direct comparison of the transmission performance of customer-operator connections with dialed connections on a loss/noise grade-of-service basis.

This type of analysis may be illustrated by comparing the loss/noise grade of service from operator to customer on intercepted incoming toll calls with directly dialed toll calls of equivalent lengths. The intercept function is provided by an operator telephone circuit and an intercept trunk associated with a terminating class 5 office as shown in Figure 11-3. Figure 11-4 shows the pertinent derived and assumed data used in the grade-of-service comparison.

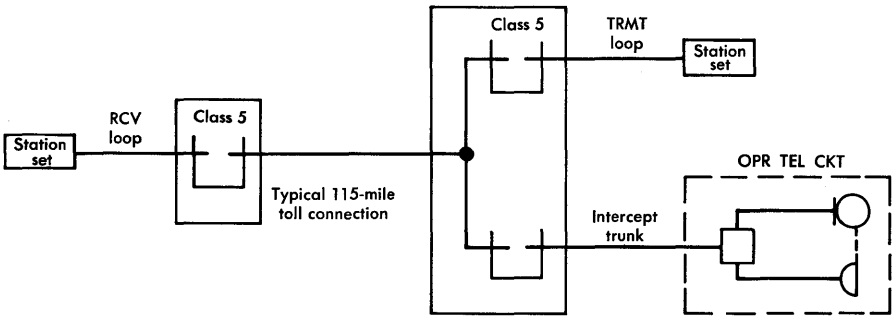

Figure 11-3. Local intercept operator connection.

The first major row in Figure 11-4 shows the grade-of-service data for a directly dialed connection over typical toll facilities about 115 miles long. Values of transmitting and receiving loop loss and noise are shown in addition to the loss and noise typical of the toll connections assumed. Finally, total loss and noise values and the computed grade of service for such connections are shown.

The second and third major rows in the table show the grade-of-service data for transmission from operator-to-customer over 115-mile long toll facilities. The second row represents performance for switchboards collocated with the switching machines and the third

CONNECTION	LINKS	LOSS, dB		NOISE, dBrnc		OVERALL					
						LOSS, dB		NOISE, dBrnc		GRADE OF SERVICE, %	
		μ	σ	μ	σ	μ	σ	μ	σ	GOOD OR BETTER	POOR OR WORSE
Customer to customer	TRMT loop Typical toll conn RCV loop	4.2 7.4 3.1	1.0 2.8 1.0	9.4 26.3 −1.0	11.0 5.3 12.0	14.6	3.2	23.8	4.3	79.7	8.6
Collocated, operator to customer	Opr TRMT Ckt Intercept trk Typical toll conn RCV loop	6.5 0.2 7.4 3.1	1.0 0.1 2.8 1.0	12.0 0.0 26.3 −1.0	3.0 0.0 5.3 12.0	17.3	3.2	23.4	4.5	71.5	13.0
Remote, operater to customer	Opr TRMT ckt Intercept trunk Typical toll conn RCV loop	6.5 2.0 7.4 3.1	1.0 0.5 2.8 1.0	12.0 17.0 26.3 −1.0	3.0 3.8 5.3 12.0	19.0	3.2	23.7	4.2	64.2	17.3

Figure 11-4. Local intercept loss/noise grade-of-service comparison.

row represents performance when the switchboards are located remotely from the switching machines. Loss data for the transmitting portion of the operator circuit are derived from the relationship between transmitting volumes over a nongain operator telephone circuit relative to a 500-type telephone set on a representative loop. Other loss and noise values for the intercept trunk, typical toll connections, and receiving loop are typical or are assumed for this discussion. Total loss and noise values and the computed grade-of-service values are shown at the right. Note that these values are significantly poorer for operator-to-customer service than for DDD service. The poorest performance is shown for remote switchboard connections.

Such loss/noise grade-of-service comparisons led to improvements in operator circuit efficiencies in TSPS-1, AIS, and the latest No. 5 ACD arrangements. There are constraints on using headsets with even higher efficiencies to compensate for extra trunking losses. One consideration is the sidetone performance of operator telephone circuits.

Sidetone Considerations. Sidetone is defined as the sound level produced at a receiver resulting from the application of a sound source to the transmitter of the same station set or operator headset [1]. The acoustic *sidetone path loss* (STPL) of a telephone set is the ratio of the acoustic sound pressure level produced by the receiver for a given input to the transmitter. Studies have shown that the optimum STPL is 12 dB. In operator telephone circuits, the STPL and resulting sidetone performance are strongly influenced by the range of return losses of facilities connected to the two-wire port of the operator circuit. These observations have led to establishing the STPL objective at a mean value of 12 dB. To accommodate return loss variation, a range of 8 to 16 dB is deemed acceptable for listener tolerance of sidetone variations.

Return gain (RG) is defined as the negative of the STPL that would result if the two-wire port of the telephone circuit were short-circuited. The short circuit is equivalent to an incoming, two-wire facility return loss of 0 dB. The STPL for a given connection is, then, the return loss at the two-wire port minus the return gain of the telephone circuit. Echo return loss is normally used to determine the STPL; i.e.,

$$STPL = ERL - RG \quad \text{dB.} \tag{11-1}$$

The return loss requirements of the additional trunks and equipment required to connect switching machines to a central access point and then to remote operator positions can be quite stringent. In many cases, the added trunks are provided over local plant facilities where meeting such requirements is physically and operationally most difficult and expensive. The addition of gain in these trunks to compensate for insertion loss and noise contributions would place even more stringent requirements on return losses so that sidetone objectives can be met. Further improvement in electro-acoustic efficiencies of the operator telephone circuits to improve grade of service would increase return gain, resulting in even more stringent return-loss requirements to meet sidetone objectives. On the other hand, the mean sidetone objective must not be relaxed much below 12 dB since more cases would result where the STPL would be less than 8 dB.

The STPL objective is not the only constraint on the echo return losses in the trunks to the operator position. The various echo return losses encountered in and beyond these links may be determined in reference to the two-wire port of the operator telephone circuit in order to sum them for use in Equation (11-1); however, the round-trip delay of each returned power component is not taken into account. Should a significant portion of this energy be returned from points some distance away, the operator may hear it as echo rather than sidetone. Therefore, the length and type of facility in these links must be controlled in order to control the round-trip echo delay.

Contrast. While an operator-assisted toll connection (such as a person-to-person or delayed call) is being established, the operator is required to communicate with both calling and called parties. Therefore, the received volume for both calling and called parties should be within the same general range.

Minimizing contrast requires that the point of access for the operator circuit be near the insertion loss midpoint of these connections. The bulk of end-office-to-end-office insertion loss in the majority of toll connections under the VNL plan (excepting those which may traverse the full intertoll final route hierarchy) is in the toll connecting trunks. Therefore, contrast is already minimized in most toll connections involving switchboard operators since there is one toll connecting trunk and one customer loop between the toll operator and each party. The toll connecting trunks between class 5 offices and toll switchboards (as well as dual access toll connecting trunks) should

be designed as low-loss toll connecting trunks. Since toll operator switchboard positions are considered to be class 4, the overall transmitting efficiency of the operator telephone circuit should be engineered so that its insertion loss plus that of the secondary intertoll trunk approximately balances the insertion losses between the operator circuit access point and the called customer.

The Operator Unified Telephone Circuit. The operating complexities and the need for improved transmission performance in extended TSPS, ACD, and AIS applications has resulted in the design of an operator unified telephone circuit (UTC). The UTC is a four-wire circuit in which the principal elements are assembled as a network usually mounted in the operator console. A block diagram of the circuit is shown in Figure 11-5. Although the circuit was designed primarily to satisfy transmission requirements on extended services, it is sufficiently flexible in application that it is being used on many other console-type operator positions.

Gain, loss, and equalizer adjustments are provided to permit coupling of the UTC to a four-wire facility. Two independently-coupled standard operator headsets may be used with an individual transmitter current cutoff for each. High-amplitude signals and noise to the operator are limited by an automatic gain control circuit; a voice-switched attenuator suppresses operator talker echo on systems serving extended areas. Sidetone to the operator position may be adjusted to satisfy the needs of each installation to achieve an STPL of 12 dB. A four-way bridge, with gain adjustments in each leg, provides a path for monitoring by a service assistant or service observing personnel and for three-way conversations involving the customer, the operator, and any third party. Power and test facilities are also provided.

Additional high-amplitude signal and noise limiting are provided by varistors on the receivers of standard operator headsets.

11-3 TSPS NO. 1 SERVICES

The Traffic Service Position System (TSPS) No. 1 is a stored-program electronic switching system designed to mechanize the handling of operator-assisted calls. Person-to-person, station-to-station, collect, charge-to-third-number, and credit-card calls are handled for both coin and noncoin services.

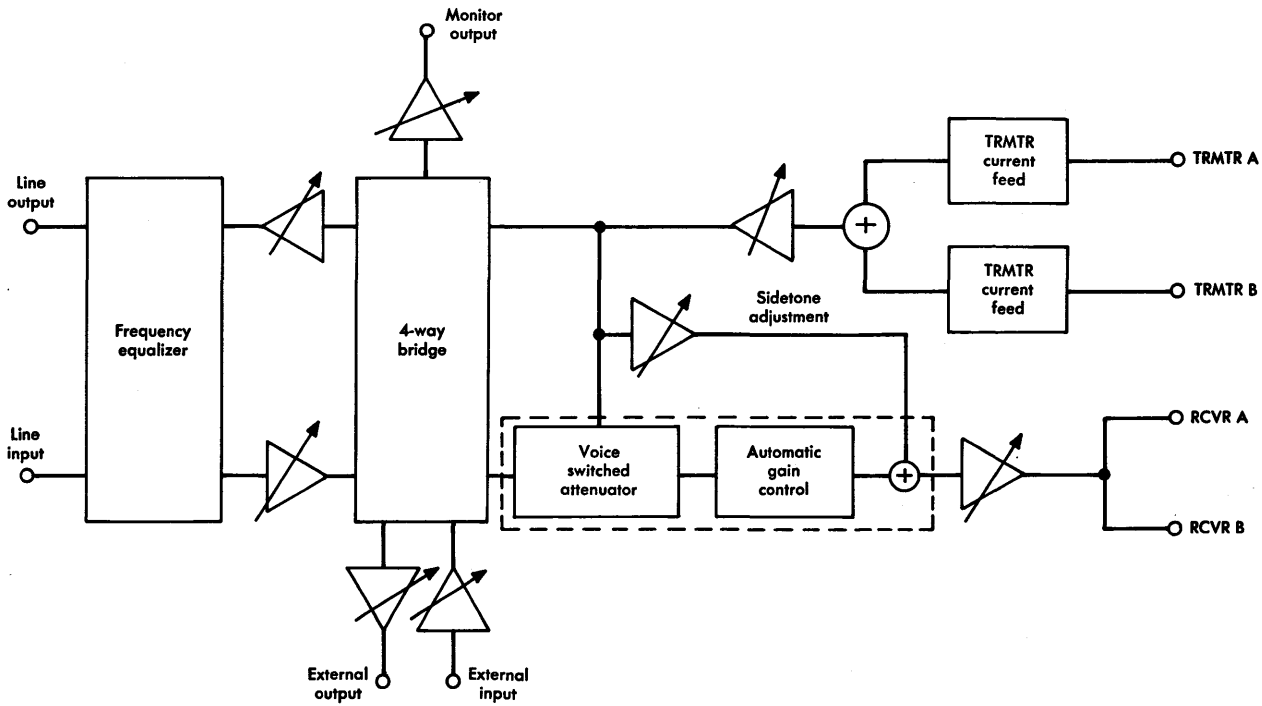

Figure 11-5. Block diagram of the four-wire unified telephone circuit.

The basic principle of TSPS No. 1 is that the operator is bridged onto the connection near the toll office end of a toll connecting trunk by a released link trunk that has virtually no effect on the through transmission path. When the operator function is completed, the bridge is removed and the connection is equivalent to that of a normal directly dialed call.

Figure 11-6 shows the primary transmission paths from the class 5 office over the toll connecting trunk through the TSPS No. 1 trunk circuit and the class 4 office to the switched message network and through the trunk and position link frames to the operator console. The secondary transmission paths shown in the figure provide facilities for delayed calls, access to information and service operators, and connections between the operator and supervisor.

Transmission Design of Primary Paths

The toll connecting trunks which include TSPS No. 1 access require application of specific engineering layout rules to ensure that trunk circuits do not degrade the return loss of the toll connecting trunks at the toll office. If recommended engineering layout rules are followed, terminal balance requirements can be met for these trunks, resulting in satisfactory echo and singing performance on end-to-end TSPS No. 1 operator-assisted connections.

The overall objectives for operator-handled calls must be met for the TSPS No. 1. Facility objectives are therefore based on the provision of operator speech volumes approximately equal to those of customers at the bridging point on the toll connecting trunk (to avoid the problem of transmission contrast), the provision of received volume and sidetone that are nearly optimum, whether bridged to toll connecting trunks at a two-wire or four-wire point or connected to CAMA, delayed call, or operator service trunks, and the introduction of virtually no degradation of transmission (insertion loss, echo performance, etc.) due to operator circuit access arrangements. Present insertion loss objectives for some of the trunks that provide primary and secondary paths are summarized in Figure 11-7.

Toll Connecting Trunks. The present objective for the inserted connection loss (ICL) for all toll connecting trunks is VNL + 2.5 dB with a maximum of 4.0 dB from the outgoing local office switch to the outgoing toll office switch. This objective also applies to toll connecting trunks which are designed for access to the TSPS No. 1.

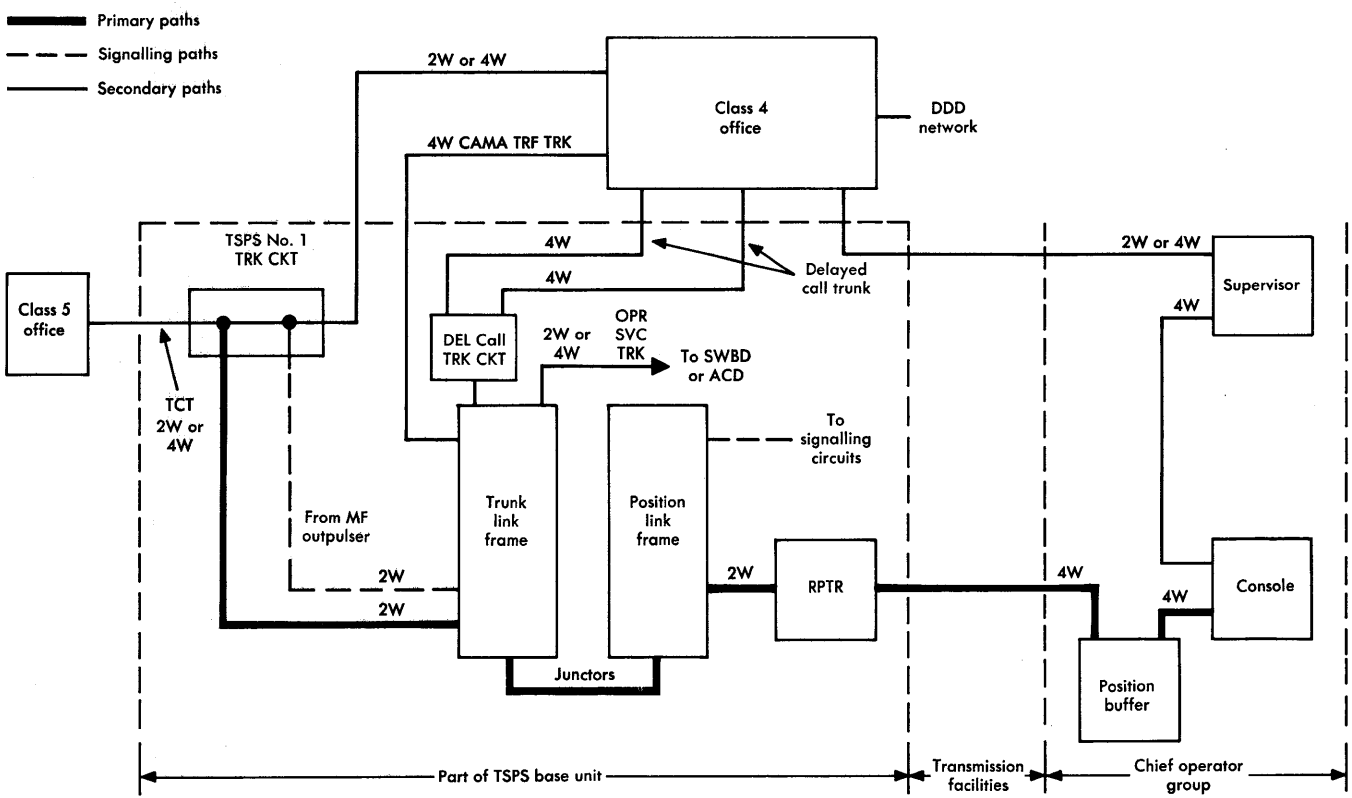

Figure 11-6. Primary and secondary transmission paths for TSPS No. 1.

TRUNK TYPE	LOSS, dB	
	TRANSMITTING	RECEIVING
Toll connecting	VNL + 2.5, (4.0 max.)	VNL + 2.5, (4.0 max.)
Operator:		
To 2W TSPS TRK CKT	7	9
To 4W TSPS TRK CKT	7	9
Operator service	VNL	VNL
CAMA access	0	0
Delayed call	0	0

Figure 11-7. Some insertion loss objectives for TSPS No. 1 trunks.

Special TSPS trunk circuits have been developed for bridging two-wire or four-wire toll connecting trunks. These circuits are designed to contribute less than 0.4 dB to the ICL of the TCT. Two such circuits, providing TSPS access to TCTs, are illustrated in Figure 11-8.

To ensure minimum contrast in customer-operator transmission, the nominal ICL for the link between the TSPS bridging point and the outgoing toll switch is 0 dB, with a maximum of 0.5 dB or the loss of the pad in the case of high-loss operation of the 4A and/or 4M toll office. This requirement and the requirements for meeting toll connecting trunk terminal balance objectives, for minimizing amplitude distortion and/or degradation in operator sidetone, and for signalling compatability between the base unit and the toll switching office result in rigid transmission rules to control the location of the TSPS trunk circuits. These requirements also establish maximum allowable cable lengths and types of facilities between the trunk circuits and the toll switching machine. In four-wire toll connecting trunks, the loss requirements are met by using voice-frequency repeaters as required. Office cable lengths are sometimes limited by the amplitude distortion introduced by the cable but this effect may be compensated by the use of repeater equalizer equipment. Four-wire bridging designs are preferred and should be used wherever possible since it is generally easier to meet all objectives than with two-wire bridging circuits. Transmission rules and recommended layouts are specified for various switching systems and locations of TSPS base units.

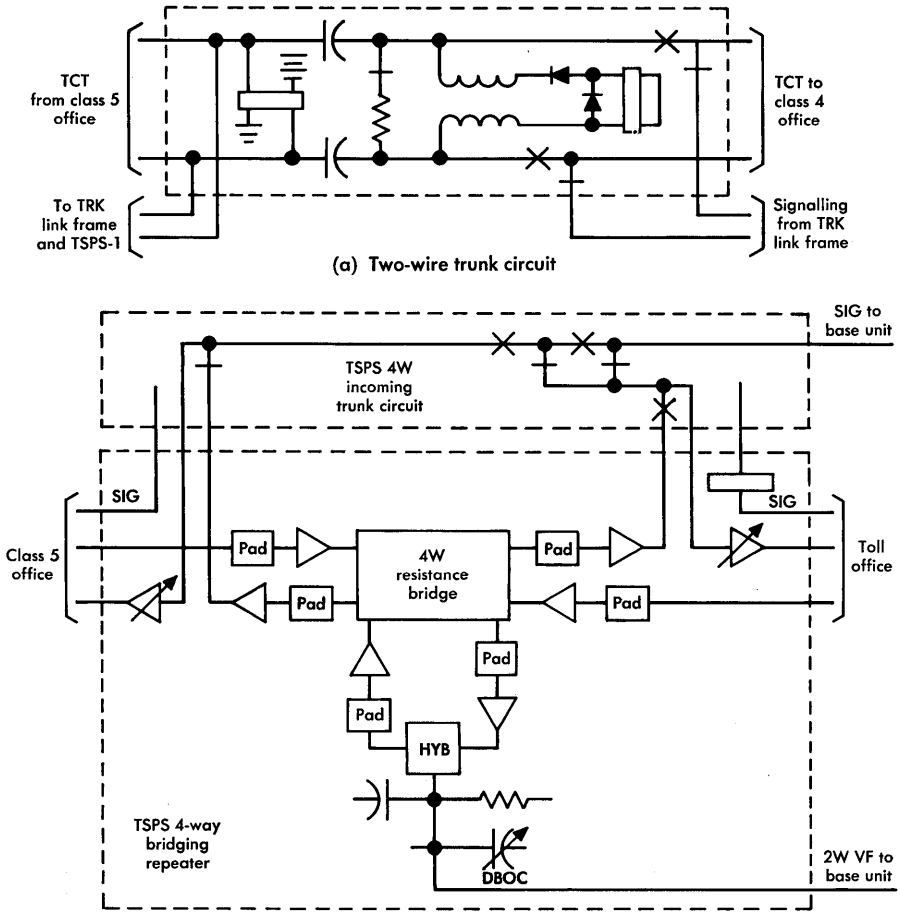

(b) Four-wire trunk circuit and bridging repeater (single-line diagram)

Figure 11-8. TSPS trunk circuits and bridging arrangements.

Cable length restrictions are imposed in two-wire toll offices to ensure meeting terminal balance requirements. These restrictions make it more difficult to provide two-wire TSPS toll connecting trunk interfaces. Four-wire trunk circuits can be used with two-wire toll offices to alleviate the restrictive two-wire cabling length limits.

Operator Position Trunks. The transmission path of an operator position trunk includes the facilities between the base unit and the operator position. Presently specified losses on operator position trunks assume the use of modern operator headsets which have small trans-

mitters with electrical amplification plus receiver arrangements for acoustic coupling to the ear. All operators in a team must use headsets of the same design.

Figure 11-9 shows a typical transmission path over VF cable facilities between the TSPS trunk circuits and the operator position. Transmission level points are shown for both directions of transmission. The transmitting path from the operator headset microphone to the trunk circuits is adjusted for 7-dB loss and, in the opposite direction, the path from the trunk circuits to the receiver is adjusted for 9-dB loss. The two-wire access port from either type trunk circuit presents a 450-ohm impedance to assure adequate return loss. The sidetone path objective for the UTC specifies an acoustic STPL of 12 dB.

As a result of the trunk design complexities, the TLPs have a somewhat different connotation than that applied in network trunk design. In the direction of transmission toward the operator position, a 1000-Hz test signal, transmitted at —21 dBm0, produces an 84-dB sound pressure level (SPL) at the receiver. In the opposite direction, a 1000-Hz test signal of —17 dBm0, corresponding to an 87-dB input SPL, is used for lineup and test.

When the operator position is remote from the base unit, the operator trunk may be provided over carrier facilities as shown in Figure 11-10. Overall losses between operator position and base unit

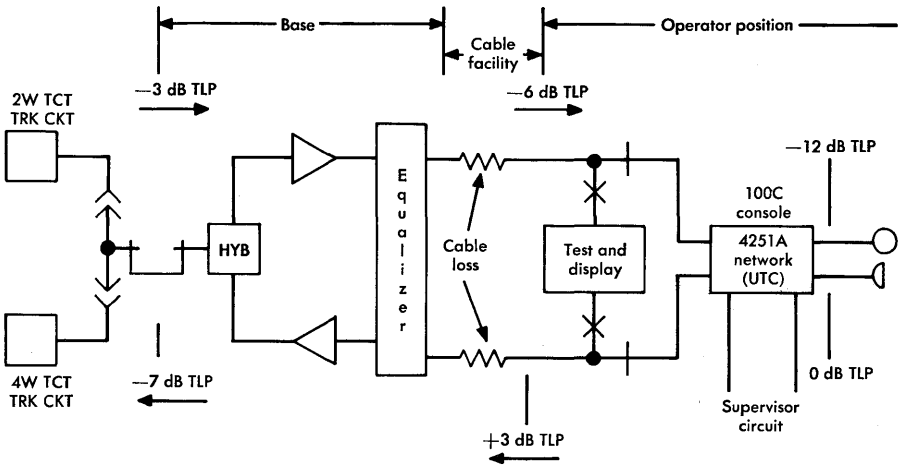

Figure 11-9. Typical operator trunk using VF cable facilities.

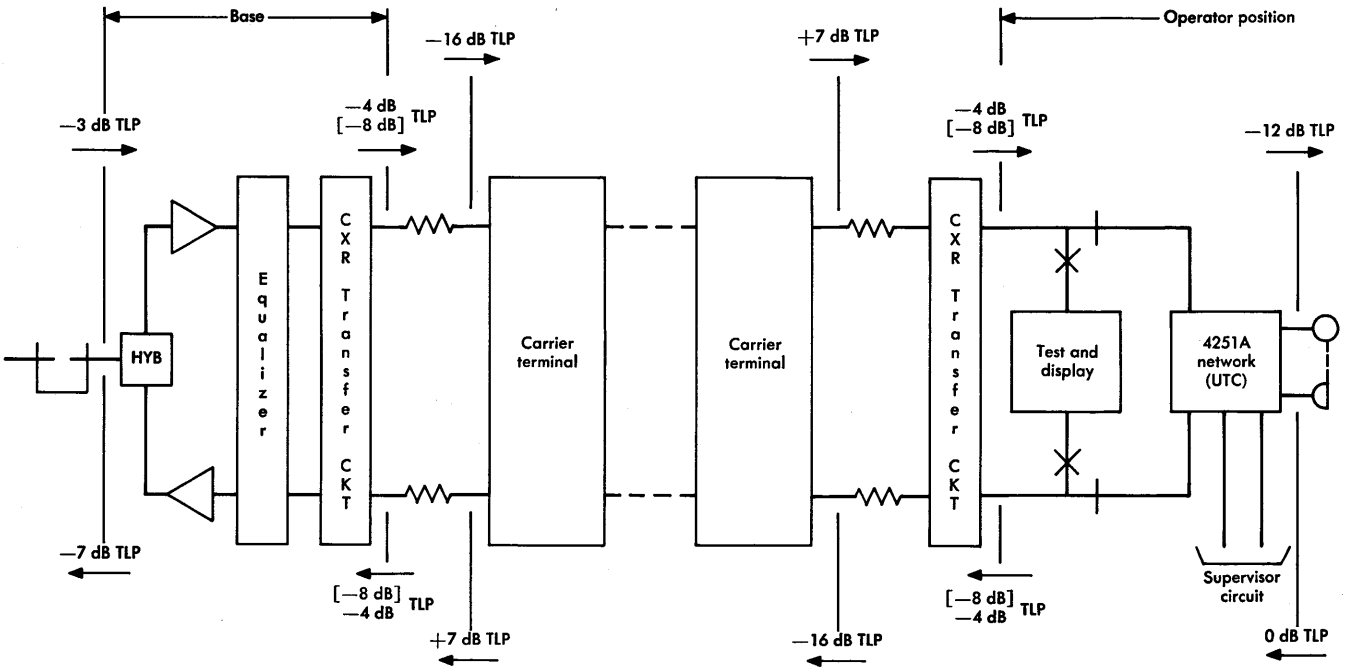

Note: Numerals in brackets show the carrier transfer circuit may be set for a —8 dB TLP; losses to the carrier terminals must be adjusted accordingly.

Figure 11-10. Typical operator trunk using carrier facilities.

are the same as those shown in Figure 11-9 but transmission level point adjustments for carrier operation must be made in the carrier transfer circuit. The sidetone path loss is designed to be 12 dB.

TSPS Remote Trunking Arrangement. The extension of TSPS services to toll offices too small to justify TSPS base units is made possible by the remote trunking arrangement (RTA) of Figure 11-11. This arrangement pools the traffic from many rural areas and makes economical the installation of a centrally located TSPS base unit [2].

At the toll office remote from the TSPS base unit, a concentrator that uses small crossbar switches operates with up to 496 toll connecting trunks to furnish service over up to 64 base-remote trunks to the TSPS processor. The processor controls the concentrator and the trunks by commands sent from the base unit to the remote toll office over 2400 bps data links designated "peripheral control link" on Figure 11-11. These links also are used to transmit status information from the toll office to the base unit. Standard four-wire facilities are used for these data links which are furnished in triplicate to guarantee reliability.

Similar links are used between the TSPS base unit and local or remote operator console locations. This arrangement provides greater flexibility in TSPS operations than did the original arrangement which required T-carrier links between the base unit and remote operator positions which were limited to about 80 miles.

The maximum distance from a remote toll office to a remote operator console location is about 1000 route miles. Since the total connection between the operator position and the toll office may be long, echo and noise must be controlled. The UTC previously discussed is also needed for echo control on facilities more than 400 miles long depending on the facilities used with TSPS position subsystem No. 2. On long trunks using L-type multiplex equipment, compandors are needed in order to meet noise requirements. The type B N3-L junction or the N3 compandor applique may be used for this purpose.

The critical control units at the TSPS base unit and the remote toll offices are duplicated. These duplicated units and triplicated data links ensure that operator services are always available. Besides bringing important economic benefits, the RTA makes it possible to provide modern operator services to virtually all locations.

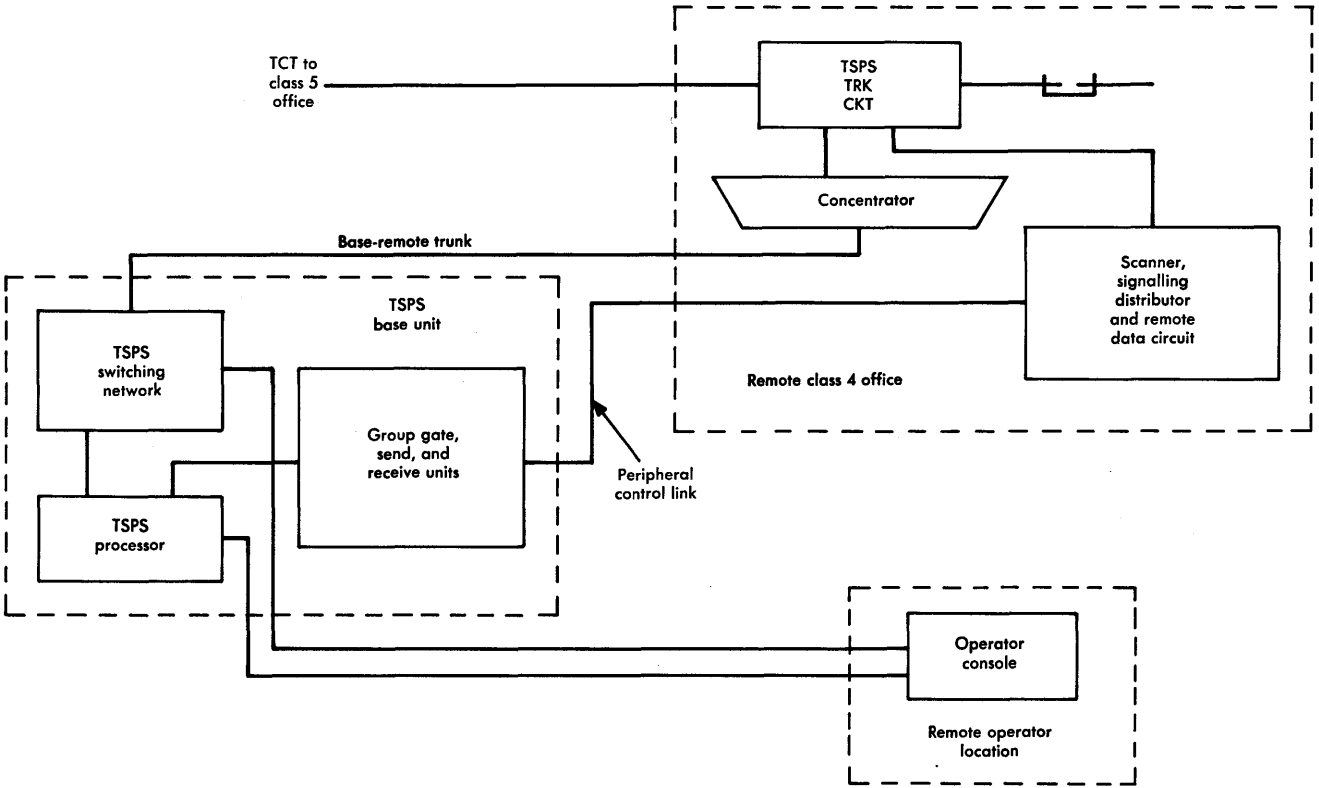

Figure 11-11. TSPS remote trunking arrangement.

Transmission Design of Secondary Paths

Some secondary (delayed call) transmission paths for TSPS No. 1 are shown in Figure 11-6. The functions of these paths and major transmission engineering considerations may now be related to the insertion loss objectives summarized in Figure 11-7.

The CAMA ONI function described earlier can be provided by the TSPS operator either on a standard basis or, during nonbusy hours, on a transfer basis. The CAMA access trunks are provided between the toll office containing the CAMA equipment and the TSPS. The insertion loss objective for these trunks is 0 dB in order to reduce level contrast between CAMA calls and other operator-assisted calls. The impedance of the CAMA access trunk at the TSPS must be designed to be as close as possible to 450 ohms.

Operator service trunks provide the TSPS operator with access to a service operator for directory assistance and rate and route information. Such trunks may be derived on two-wire or four-wire VF facilities or on carrier channels, depending on the distances involved. In addition to the 0-dB ICL design objective from switchboard or ACD to trunk link frame, the operator service trunk must present a 450-ohm impedance to the trunk link frame during operator-to-operator connections to ensure satisfactory sidetone performance.

Delayed-call service can be provided by the TSPS operator via special delayed-call trunks. Each delayed-call trunk has two terminations at the toll switching machine and loops through the delayed-call trunk circuit at the base unit location to provide operator bridging access. The two-wire operator position trunk is connected through the base unit switching network to a two-wire port on a three-way bridging circuit. The two four-wire ports are connected to the toll office. Delayed calls typically require the operator to recall the calling customer via a toll connecting trunk and to extend the call to the called customer via the intertoll network. Since the final connection includes the delayed-call trunk facilities both to and from the toll switching machine, the combined path represents additional links in the DDD hierarchy; they are functionally equivalent to two tandem-connected secondary intertoll trunks. The ends that connect to the intertoll network must meet through balance objectives and the ends that connect to toll connecting trunks must meet terminal balance objectives. To meet these objectives, four-wire designs must be employed.

The operator can transfer the call to the supervisor by extending the customer connection through the toll switching machine and back over the access trunk to the supervisor position. The supervisor thus has the status of the called party. The access trunk must provide appropriate TLPs at the supervisor position. The supervisor also has a line to the local office which is designed as a conventional loop. Monitoring arrangements are provided at the chief operator group location.

11-4 AUTOMATIC INTERCEPT SERVICES

The automatic intercept system (AIS) is one of a number of systems used to provide operator and other auxiliary services. These systems increase the efficiency of providing such services at reduced cost. Initially, the AIS was used in metropolitan areas and was limited by echo impairment to about 150 miles between the intercepting office and the operator position. However, the field of application is now being extended to about 1000 miles by using the UTC (Figure 11-5), compandors in the longer trunks, as was done for TSPS, and trunk concentrators. The transmission plan for extended AIS is to be used in all new applications and wherever systems are to extend beyond the metropolitan area.

The AIS permits automatic processing of most intercept traffic. Calls are intercepted at the terminating class 5 office and are routed to a remote automatic intercept center (AIC) where intercept information is provided by recorded announcements. If the calling party stays on the line, the call is transferred automatically to an assistance operator at the central intercept bureau (CIB). This process is accomplished by the use of trunk concentrators, time division switching, stored program control, magnetic record storage, and voice announcement systems to provide announcements tailored to the specific need of each call. In addition to the increased efficiency, economic savings are realized by reducing the number of operators because over 90 percent of intercepted calls are satisfied by recorded announcements.

In a class 5 office equipped with ANI modified to identify called numbers, the intercept function is entirely automatic and handled by recorded announcements. If the office does not have the ANI feature, intercepted calls are routed directly to an ONI operator who asks for the called number. This number is then keyed into the AIC where the call is processed as above. Vacant code intercepts should be routed to announcement machines and not to the AIC.

Principles of Operation

The simplest form of AIS, shown in Figure 11-12, is called a single-AIC system; all of the class 5 offices in a city and surrounding suburbs are served by one centrally located AIC. Calls are intercepted in the terminating class 5 office and switched to the AIC for a recorded announcement and for further processing, if necessary. Connections are made through the AIC switching machine to an announcement machine at which appropriate information is formulated for most intercepted calls.

A team of operators and their supervisor are located at a CIB which may be at a location remote from the AIC. When the announcement is completed, the calling party may remain on the connection to receive operator assistance over a separate connection from the AIC to the CIB. The operator has the capability to set up other less frequent types of connections, some of which are three-way. These include the addition of the announcement machine, the addition of the supervisor, and emergency completion to the message network although the operator may have to act as a voice relay in such cases. The added connection to the supervisor is converted to a direct connection when the operator disconnects. The supervisor has a direct connection to the operator.

A single AIC can serve 50 to 100 class 5 offices depending on the traffic loads of the individual offices. Although larger metropolitan areas might be divided into a number of independent single-AIC systems, the use of one or more multi-AIC systems may be more economical. In a multi-AIC system, as shown in Figure 11-13, each AIC provides announcement service for a specific group of class 5 offices and all AICs have access to a single CIB for operator service. A home AIC has direct access to the CIB and remote AICs gain access through the home AIC. Figure 11-13 shows class 5 office connections to the remote AIC announcement machine (path 1) and to the CIB operator (path 2). Class 5 offices that are connected to the home AIC function as if they were in a single-AIC system. The CIB operator has direct trunking to the remote and home AIC announcement machines.

Intercept traffic to the AIC may be routed either directly or through a concentrator from a class 5 office. A No. 1 or No. 23 trunk concentrator may be remote from or collocated with the AIC. Only one concentrator may be used between a class 5 office and the AIC.

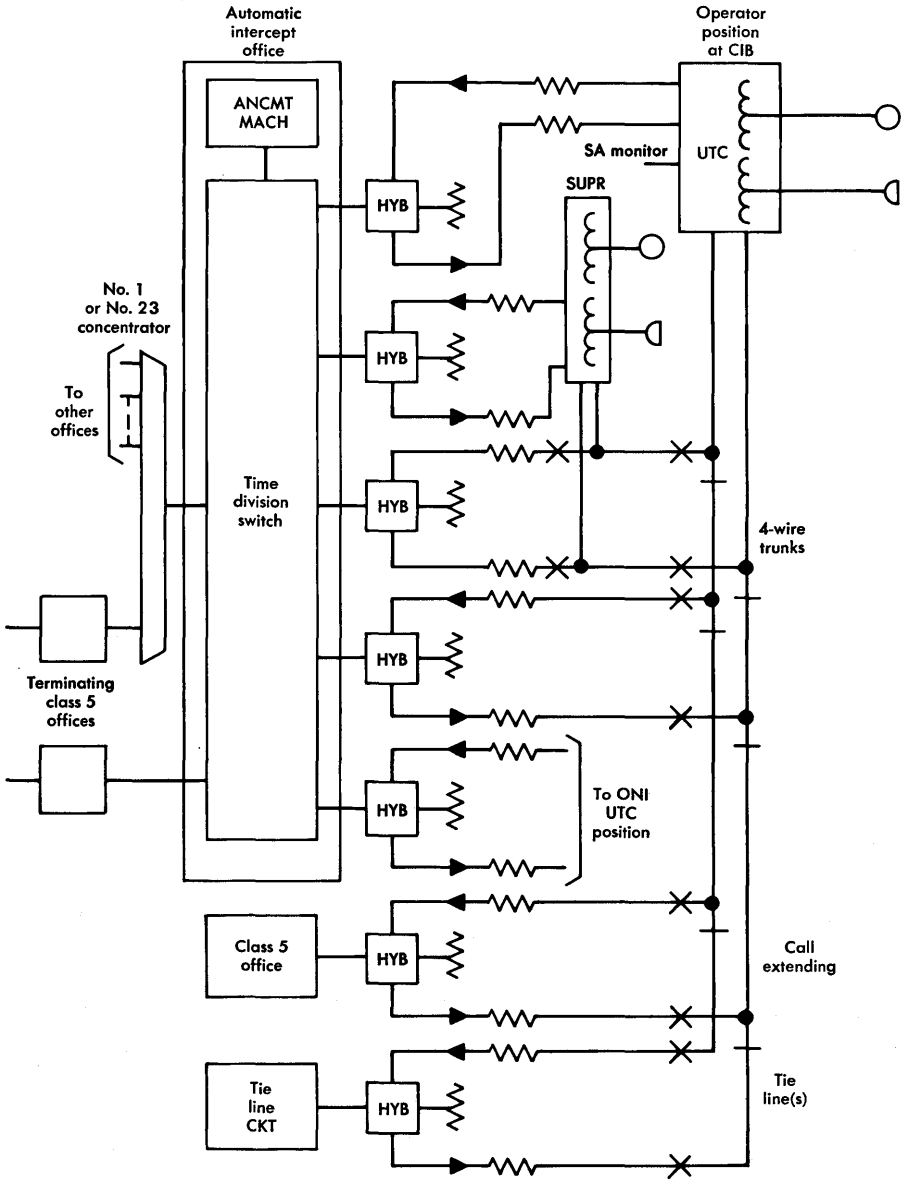

Figure 11-12. Single-AIC intercept system.

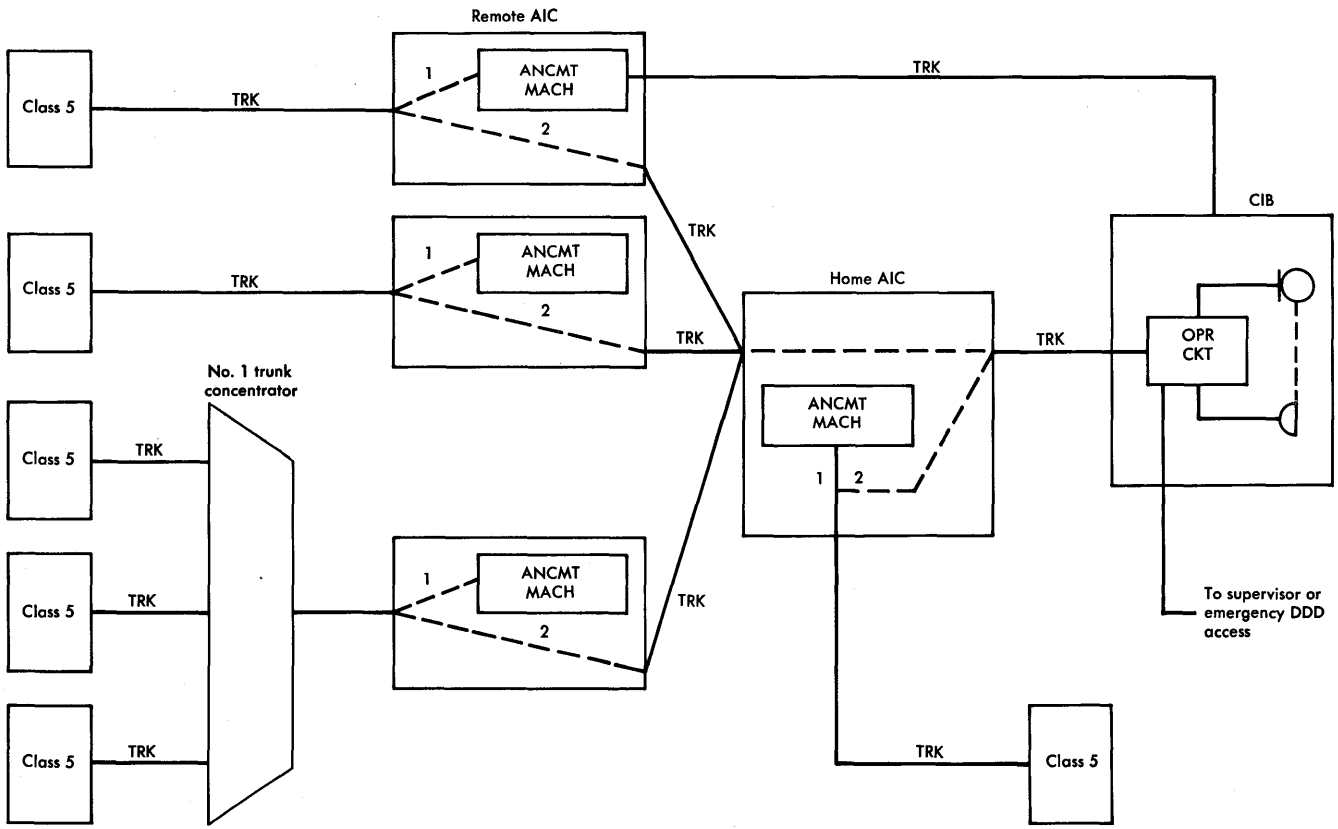

Figure 11-13. Multi-AIC intercept system.

Transmission Considerations

The overall objectives for calls serviced by operators must be met for the AIS. One of the major problems in intercept service is that the AIS network (with its transmission impairments) is added to an intercepted toll call that may involve a toll connection of any length. Acceptable transmission performance requires the use of AIS trunks with low loss, low noise, and high return loss in order to meet loss/noise grade-of-service and operator circuit sidetone objectives.

Design. The objectives on announcement calls can be met simply by setting the announcement volume to the required value at the intercepting class 5 office since echo and sidetone requirements do not apply. However, meeting objectives on operator serviced calls is both complex and difficult. Compromises are necessary to resolve the conflicts among transmission parameters affecting grade of service, operator circuit sidetone, and echo; the resultant requirements for AIS trunking become more stringent than for most toll connecting trunks.

In order to meet the intercept operator transmission quality objectives, message trunks meeting four-wire toll connecting trunk objectives must be used between the intercepting end office and the concentrator and between the home AIC and the CIB. Trunks between the concentrator and a remote AIC and between remote and home AICs must meet intertoll trunk objectives but with 0-dB loss. In addition to these trunk requirements, compandors must be used to meet noise requirements on long trunks that utilize L-multiplex equipment between trunk concentrators and AICs. For extended systems, the UTC network must be used at all operator and supervisor positions.*

Overall trunking loss for the AIS between a class 5 office and the operator telephone circuit is specified as 6 dB. Trunks of toll connecting quality are assigned 3-dB loss each and those of intertoll quality are assigned 0 dB except when the No. 1 trunk concentrator is used. Therefore, No. 1 concentrator trunks must be four-wire.

To accommodate the assigned trunk losses and the use of standard carrier facilities where required, certain transmission level points (TLPs) have been assigned within the AIS. The AIC switching equip-

*Long trunks are those in excess of 90 to 130 miles depending on trunk type and facility type.

ment is assigned a −2 dB TLP. When a 23-type trunk concentrator is used, it also is assigned a −2 dB TLP but when the preferred No. 1 trunk concentrator is used, it is operated at −10 dB TLP in one direction and +5 dB TLP in the other. The loss of the associated trunks are specified accordingly.

Care must be taken to provide proper return losses and through balance where two-wire facilities are used in the end AIS links. In addition, idle circuit terminations must be provided in both incoming and outgoing trunks of the 23-type concentrator and of the AIC. No idle circuit terminations are required at a No. 1 concentrator as it operates as a four-wire switch.

Transmission Performance. Except in some three-way connections, the design objectives for AIS trunks and other components provide adequate loss/noise grades of service. Grade of service to the AIS operator is nearly equivalent to that for a directly dialed connection. Customer loss/noise grade of service is still somewhat lower than that of directly dialed service but is significantly better than that from a remote manual intercept operator position. Significant further improvement in grade of service would require still more stringent objectives which may not be economically achievable for local plant facilities.

11-5 AUTOMATIC CALL DISTRIBUTOR SERVICES

An automatic call distributor (ACD) accepts calls from a large number of sources and distributes them to a number of operator positions for appropriate processing. The call distributor provides centralized operator number services for local directory assistance, intra-NPA directory assistance, toll directory assistance, and call intercept. Two types of system provide this service: (1) the older No. 23 ACD which utilizes 23-type operating room desks (ORD) and (2) the No. 5 crossbar ACD. The latter system serves most ACD functions in the plant and is replacing the older 23-type system.

The No. 23 ACD

A maximum of three No. 23 ORDs, each having a maximum of 38 operating positions and with one or two service assistant (SA) positions associated with each desk, may be served by one No. 23 ACD system. With recent improvements, this system can serve large areas in which there may be up to 1000 route miles between the access office and the ACD operator positions.

While the No. 23 ORD is no longer manufactured, a number of installations are still in service. Provision has been made to improve the performance of these systems. Either the No. 23 or the more modern No. 1 trunk concentrator system may be used to supply trunks from outlying positions to the ACD. In addition, the UTC may be installed at the operator and supervisor positions. Through balance requirements have been established for the trunks. To avoid loss/noise grade-of-service penalties, compandors may be needed on long operator trunks to reduce noise to operator positions.

The No. 5 ACD

The basic components of the present version of the No. 5 ACD system include trunk facilities, trunk concentrators, operator position circuits, the No. 5 crossbar ACD equipment, and arrangements for establishing night closing and call transfer. The No. 5 ACD arrangements are in process of continued evolution in respect to available services and transmission plan.

The No. 5 ACD has a number of flexible traffic engineering features; traffic may be distributed from 2700 incoming trunks to 500 operators grouped in teams which may be remote from the ACD. As shown in Figure 11-14, an operator at any position may transfer any type of traffic to an SA, to another operator position within the ACD, to outgoing trunks (OGT), or to night closing trunks (NCT). These trunks may be routed to distant ACDs, desks and switchboards, TSPS No. 1 positions, or AICs. Transfers can also be made to telephone switching offices for emergency access to the switched message network.

In early planning for ACD, certain constraints on applications and the availability of new transmission hardware were assumed. The most important of the constraints include segregating directory assistance and intercept operator teams, restricting the total ACD system length (including night closing and call transfer trunks), and restricting the use of outgoing trunks for access to the DDD network to emergency situations. Some ACD office layout and wiring restrictions are also imposed so that the transmission performance of the No. 5 ACD system can meet transmission objectives for operator services. As in other extended operator service systems, the UTC is used in the extended phase-1 No. 5 ACD. A 4243-type network is used in the phase-2 No. 5 ACD. Compandors are used on long trunks utilizing L-type multiplex equipment on both systems.

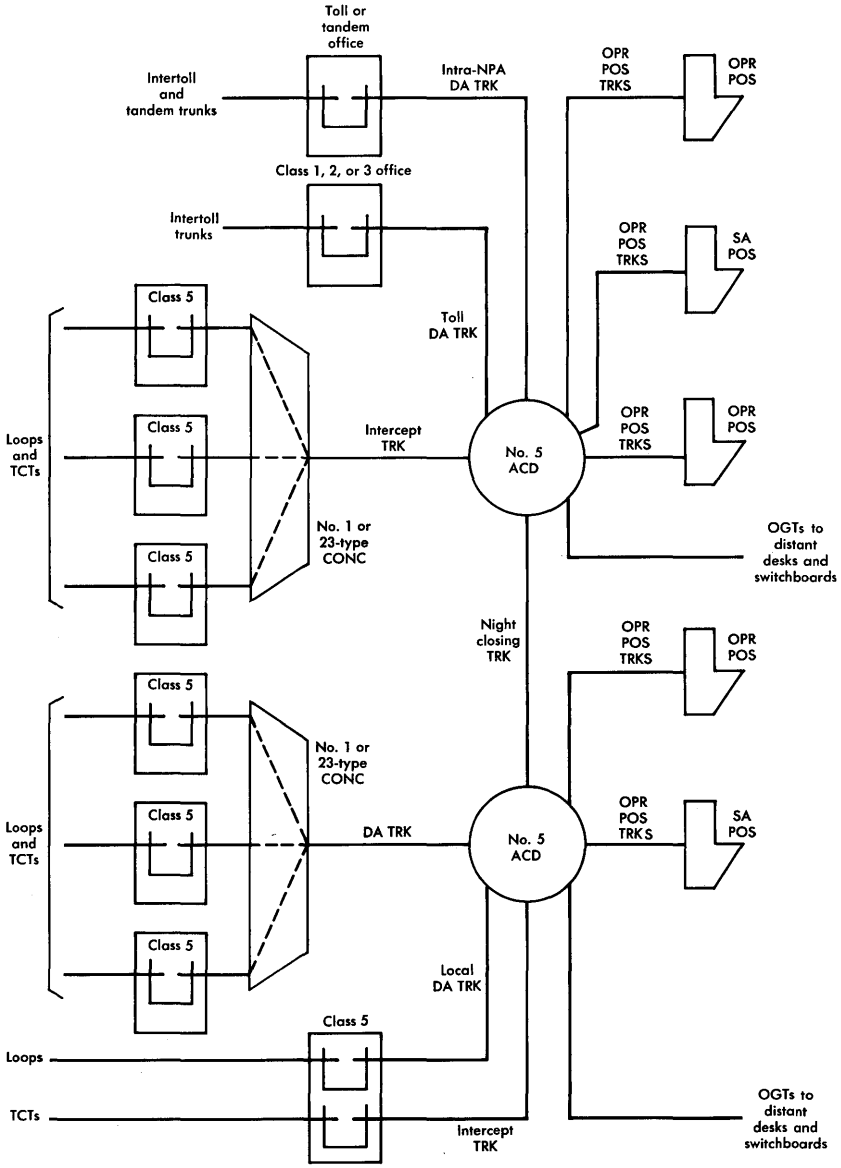

Figure 11-14. Typical No. 5 ACD arrangements.

To reduce the probability of blocking and to prevent the introduction of excessive loss in directory assistance and intercept connections, only limited use of concentrators is permitted. Intra-NPA and toll directory assistance trunk concentration is not used and only one stage of concentration is used for local directory assistance and/or intercept trunks. The No. 1 trunk concentrator is recommended.

From a transmission point of view, the No. 5 ACD is a 900-ohm two-wire crossbar switching machine. Customers are connected to the ACD by incoming line circuits which have both primary and transfer appearances at the switching machine. Negative impedance converters are applied to remove the bridged impedances on call transfers. Maintaining stability and proper operation of the converters in two-wire switched connections requires restrictions on cabling runs and office layouts.

While the general operator service transmission objectives apply to all versions of the No. 5 ACD, the mix of local, intra-NPA, DA, and intercept services requires refinement in interpretation of the transmission objectives. For calls between operators and local or intra-NPA customers, the loss/noise grade of service delivered to both parties should be at least that of a short toll connection. The short toll connection is used as the reference because grade of service on toll calls is found to be essentially constant for the first 115 miles of connection length. The short toll connection objective must be met to avoid contrast with the grade of service on normal calls between local or intra-NPA customers even though the ACD system may carry traffic a considerable distance. For calls between operators and toll customers, the loss/noise grade of service should be at least that of a directly dialed connection of equivalent length.

The talker echo objectives for connections between customers and operators is based upon estimates of satisfactory talker echo grade of service under VNL rules. The objective is evaluated in terms of equivalent toll quality independent of the length of trunks dedicated to operator services within the ACD system. Echo objectives for local and intra-NPA directory assistance and intercept differ from those for toll directory assistance and intercept. Use of high-quality ACD operator position facilities and telephone apparatus, together with the application of balance procedures at the ACD, make operator talker echo controlling rather than customer talker echo. The mean operator acoustic sidetone path loss should be 12 dB, as in the other services; a range of 8 to 16 dB is acceptable.

11-6 OTHER AUXILIARY SERVICES

In addition to the operator assistance and number service functions, there are other auxiliary and miscellaneous services or service features to which access may be obtained by direct customer dialing or through an operator. Among these are:

(1) *Announcement systems* for customer dialing of recorded local time and weather information or for lease by various public and private organizations to allow dialed access to their recorded announcements

(2) *Official operator* positions for assistance functions associated with gaining access to the business stations of telephone personnel

(3) *Rate and route operators* for assistance in determining charges for calls

(4) *CAMA operator number identification* for determination of calling party telephone numbers where automatic equipment is not available

(5) *Mobile radio operators* for assistance in interconnecting mobile radio stations with the message network

(6) *Coastal harbor, air-to-ground, railroad,* and other radiotelephone services interconnected with the message network by special operators

(7) *BELLBOY® service* for dialed access to BELLBOY transmitting equipment

(8) *Repair service* for customer access in reporting trouble

(9) *Conferencing services* for provision of multistation message network connections.

Objectives for customer and operator grades of service should be similar to those for the operator services previously discussed. However, the unique facility arrangements involved in such connections often make this difficult to achieve. For each service provided, judgement must be applied to the operational feasibility and economic

impact of designing the associated plant to meet DDD standards for any possible connection. Although space does not permit detailed discussions of design criteria for all of these services, the following considerations for conferencing services and for ONI illustrate the principles involved.

Conferencing Services

While it is presently a relatively small segment of the telephone business, toll conference calling is an increasingly important and growing service. Frequently, high-mileage toll circuits to several locations are involved and the calls are of long duration.

Physical Operation. Conference calls are established manually at toll centers by special operators whose positions at the toll switchboard are arranged to provide access to special conference bridging equipment. The latest conference bridge is made up of five 6-port groups which may be used to handle five separate 6-way conferences or up to 30 conferees in a single conference by interconnecting the 6-port groups via common buses provided. The bridge may be operated on a four-wire or two-wire basis in conjunction with either the message network or private line networks. Voice-switched-gain amplifiers are provided at each port to maintain singing margins at two-wire bridges and reduce noise buildup.

Transmission Considerations. The toll switchboard positions are assumed to be at a —2 dB TLP and the conference bridge circuit is designed to introduce essentially no transmission loss in any forward talker-to-listener path through the bridge by means of the voice-switched-gain amplifiers. These amplifiers provide protection in two-wire arrangements against echo, noise, and singing by inserting a loss of 15 dB in the reverse path at the time speech is applied to the transmitting side. If no speech is present, the 15-dB loss is in the transmitting side and the same overall loss is maintained around the loop to prevent singing. Some chopping occurs if two talkers speak at the same time since first one and then the other generally gains control. However, this chopping is less noticeable than that from ordinary echo suppressors which may switch losses of 40 dB or more.

The operator is also given the ability to disable the switched-gain amplifiers in ports 1 or 6 of the conference bridge. The disabling feature may be needed when two bridges in different toll centers must be

connected together via an intertoll trunk to accommodate two groups of customers, each in or near separate cities. The disabling feature prevents the insertion of an additional voice-switched device between conferees on different bridges.

CAMA Operator Number Identification

To accomplish the ONI function, a CAMA operator is temporarily bridged by the switching machine to a dialed connection. Customer-to-customer transmission is not affected since the bridge is removed prior to the call being advanced to the called customer. However, the insertion loss of the facility from the position link of the switching machine to the CAMA operator position must be controlled so that operator-to-calling customer volume is satisfactory. Therefore, special engineering is not normally required unless the CAMA position is at a location remote from the toll switching machine or if the toll office is a four-wire office equipped for A-pad switching.

REFERENCES

1. American Telephone and Telegraph Company. *Telecommunications Transmission Engineering*, Volume 1, Second Edition, (Winston-Salem, N. C.: Western Electric Company, Inc., 1977), p. 612.

2. Arnold, T. F. "TSPS Goes to the Country," *Bell Laboratories Record*, Vol. 55 (June 1977), pp. 147-153.

Telecommunications Transmission Engineering

Section 4

Special Services

Much of the telecommunications business involves the provision of telephone service to residential, non-PBX business, and coin telephone stations. These stations are connected to a serving central office through customer loops and may be further connected via the local and toll portions of the network to other stations. The service so rendered is referred to in this book as "ordinary telephone service". The major plant items normally used to provide such service (excluding the network switching machines and trunks) are the main station telephones and on-premises extensions, the loop facilities, and the terminations at the switching machines for number identification and network access.

A second class of services, used primarily by business customers, involves the provision of service capabilities beyond ordinary telephone service. This class has been called private line services, full period services, and special services. For the purposes of this book it is called special services.

Chapter 12 introduces the types and methods of administering special services. These services are defined and classified from a usage and transmission standpoint.

Switched special services are those characterized by customer dialing over either the message or private networks. Technical design considerations for the majority of the switched special services types are discussed in Chapter 13. Centrex service, a switched special service with additional capabilities, is discussed in Chapter 14. Finally, switched special services may be configured into customized private networks called tandem tie trunk networks, switched services networks, and Enhanced Private Switched Communications Service. Design criteria for these arrangements are considered in Chapter 15.

Private line special services are those characterized by little or no switching. They include many types with a wide variety of bandwidths and transmission capabilities. Design considerations of most private line types are discussed in Chapter 16. Transmission requirements for program and video services involve special considerations such as increased bandwidth. These services are discussed in Chapter 17. The digital nature of most types of data combined with the digital nature of some types of transmission systems can offer advantages and efficiencies for overall data transmission. Such private line digital data service is discussed in Chapter 18.

Chapter 12

Introduction To Special Services

Special services constitute a large and growing field which rivals the message network in size and complexity. The facilities for these services, including terminals, channels, and network usage, are estimated to be involved in about 40 percent of Bell System revenue.

This large proportion of total revenues, predictions of sustained growth, and pressures due to competition and regulation are causing rapid changes to occur in the field of special services telecommunications. Services and the methods of providing and maintaining them are changing in response not only to existing problems but also to anticipated needs.

Special services may be classified into groupings that characterize them in terms of transmission considerations. The classifications used in this chapter are not formally recognized but are used for purposes of discussion. Features and uses of the various types of services in each group are then presented. Finally, the major functions associated with implementing special services and the administrative methods of handling the high volume of orders are discussed.

12-1 CHARACTERISTICS OF SPECIAL SERVICES

The field of special services can only be defined precisely by an enumeration of all types of services constituting the field. Most often, they are defined to include all Bell System services except residence, coin, and non-PBX business telephone services.* For convenience, the

*These nonspecial services are sometimes referred to as plain ordinary telephone service (POTS).

latter are referred to in this chapter as ordinary telephone service. Special services are *special* in that they generally require engineering treatment beyond that applied to ordinary services in respect to transmission, signalling, maintenance, and/or customer use.

Special services are utilized primarily by business customers who need quick and efficient communications to all parts of a geographically dispersed enterprise. Since profits can often be increased by economic use of telecommunication techniques, it is important to provide the systems necessary to meet specific needs.

While the bulk of telephone plant is installed for ordinary telephone service, special services utilize the telephone plant in unique ways. For instance, most of the customer loop plant is installed under the resistance, unigauge, or long route design plans with considerations focusing mainly on ordinary residential and business service. Interoffice plant is largely designed for message trunk use. However, a special services circuit may require the use of both a loop facility and an interoffice facility which together must perform all the normal functions of an ordinary customer loop. For some services, normal plant must be modified to achieve the desired transmission requirements. An example is the use of four-wire facilities with special equalization for some types of data services. For other services, it is economical to provide supplementary plant, as is done for video, program, or teletypewriter services.

Transmission standards for special services are generally more stringent than for ordinary telephone service; an example is the lower allowable loss/frequency distortion of loops used for data transmission. In addition, video and telegraph services have unique transmission standards. Yet, special services must be compatible with ordinary telephone service; neither should interfere with the other since both may be provided over the same cables and carrier systems.

Customer operational needs or transmission requirements which are not specified in an existing tariff must be covered by a special authority filed with the appropriate regulatory bodies. Sometimes special equipment assemblies may be required by the telephone company to provide a tariff-approved service in a nonstandard manner. While these assemblies do not require additional regulatory authorization, the unique technical requirements must be satisfied.

Ordinary telephone services are generally bulk-engineered. For example, customer loop plant under resistance design is engineered by cable and route for all customer locations to be served by the cable arrangement. Application is by plant assignment, usually without further engineering considerations. Special services, however, are engineered on a per circuit basis for each customer location; individual circuit engineering is one of the major features that distinguish special services.

12-2 TRANSMISSION CLASSIFICATIONS AND SERVICE FEATURES

Special services may be classified in a number of ways. They may be considered as telephone types, those used only for voice communication, or nontelephone types, those never used for voice communication. They may be classified as *services,* where the telephone company provides all facilities and instrumentalities and a total service, or as *channels only,* where the telephone company provides transmission facility and interface equipment and the customer provides the terminal equipment. Special services have also been classified according to length or required bandwidth. None of these classifications completely satisfies the needs in respect to transmission.

The features of a special service are major factors in the proper selection of the transmission objectives and design of the circuit or system. For instance, some services are provided simply for communication between the same two points while other services provide special access circuits to the switched message network. The transmission objectives for these two types of services are substantially different. The transmission classifications of special services then relate to the use or nonuse of the service relative to the switched message network. Four broad classifications of service are formulated for use in this discussion.

The features of the many individual special services that make up the four classifications defined by transmission considerations play a large part in determining the types of facilities that must be used to provide these services. While the services to be described are offered by most telephone companies, the names of the services and of the facilities used are not consistently applied. The terms defined here are those most commonly used.

Class 1 Special Services

Services which are always switched through the message network are designated Class 1. In order to achieve a high degree of customer satisfaction, the design objectives for these services are chosen to be compatible with comparable message network service. Thus, the loss objective for a Class 1 special services circuit is chosen to be equal to or less than the maximum loss of an ordinary loop. These services fall into two categories, depending upon whether they are used in conjunction with a private branch exchange (PBX).

Non-PBX-Related Services. This group of services includes several that may be considered as extensions of ordinary telephone service to provide the customer more economical arrangements and is one that provides access to the message network for the transmission of voice and other types of signals.

Foreign exchange (FX) service permits an individual customer to appear as a local customer in any area other than that normally serving the geographical area in which the customer is located. The service is provided by an access line, called an *FX line,* illustrated in Figure 12-1.

Wide area telecommunications service (WATS) permits a station to make calls to selected wide interstate or intrastate geographical regions (called bands) for a fixed monthly charge. The service may be unlimited or may be restricted to a specified number of hours per month. Separate access lines for interstate and intrastate service are required to the most convenient central office equipped for WATS. Where the normal serving office is not equipped for WATS, the access

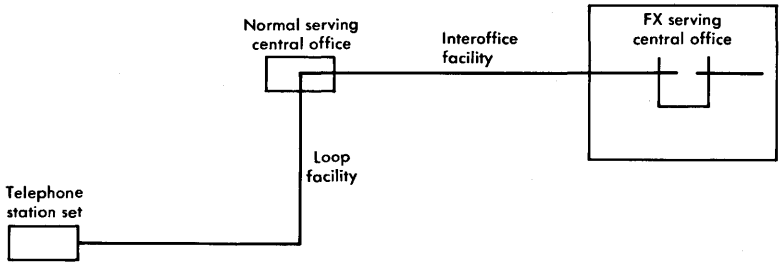

Figure 12-1. Configuration of an FX line.

lines, called WATS lines, are similar to FX lines except that they are used exclusively for outgoing toll calls.

Inward WATS permits callers within specified geographical regions to call the inward WATS customer, using an 800 "NPA" number, without incurring a toll charge. As in WATS, an access line is required between the customer station and an office equipped for inward WATS. Only incoming service is provided by this type of line.

Off-premises extension (OPX) service is provided by an extension telephone station remote from the main station location. The extension line may be bridged at the main station location but more often, the main station line and the extension line are bridged at the central office. Bridge lifters are often required to reduce losses.

Secretarial service provides telephone answering service. Lines similar to off-premises extension lines connect the customer line to the secretarial service location and usually terminate in a secretarial service switchboard. These lines, illustrated in Figure 12-2, are usually arranged for receiving calls only. Bridge lifters are sometimes required at the serving central office to reduce loss.

DATA-PHONE service provides for voiceband data transmission as well as for talking capability over the switched message network. Generally, local telephone loops are utilized. Conditioning may be required dependent on data format and bit rate.

A variety of other services may be furnished and access lines of the same general class as those described are used by some companies

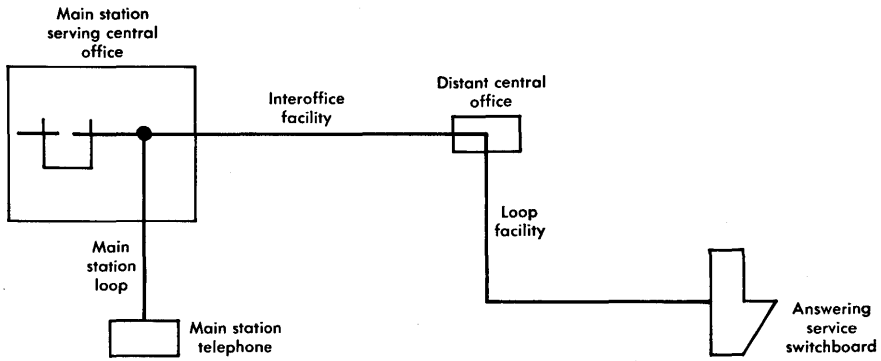

Figure 12-2. Secretarial service line.

to provide services peculiar to the individual company. For example, a service similar to WATS provides outgoing service only from suburban to metropolitan areas. Another example is the use of long distance (LD) lines to provide direct access to a toll operator. This service, used mainly by hotels and motels, provides immediate toll billing information.

PBX-Related Services. These services are defined in terms of the various available types of PBXs. A PBX is basically a system for interconnecting telephone station sets on the same premises. Connections can also be made from a PBX station to the switched message network or to other lines and trunks terminated in the PBX. A PBX may be provided by the telephone company or by the customer under interconnecting arrangements. While a PBX can be either manually or dial-operated, it generally has a customer-employed attendant to assist in placing a call, if necessary, or to exercise control and administrative functions.*

A *main PBX* is one which has a directory number and can connect PBX stations to the message network for both incoming and outgoing calls. Tie trunks, FX trunks, and WATS trunks may also be terminated in a main PBX but the PBX does not switch tie trunks together in tandem.

A *satellite PBX* does not have a directory number; all incoming calls are routed from the main PBX via tie trunks. For outgoing service, calls may be routed directly over central office trunks, if provided, or over tie trunks through the main PBX and central office trunks. The satellite PBX is usually located in the same local area as its main PBX.

A *tandem PBX* performs the same functions as a main PBX and is also used as an intermediate switching point to connect tie trunks to two or more main PBXs.

An *intertandem PBX* performs the functions of a main PBX and also switches together tie trunks from tandem PBXs. Main, satellite, tandem, and intertandem PBXs are used in configurations which make up private switched networks discussed as class 4 special services.

*Outside the Bell System, the term PABX (private automatic branch exchange) is often used to denote a dial PBX.

Centrex is a PBX-related service with several important added features. The most notable features are direct inward dialing to a centrex station from the message network without attendant assistance and detailed billing of outgoing toll calls listed according to specific centrex stations. Additional optional features may be provided as the customer requests. Centrex equipment may also have the capability of switching tandem and intertandem tie trunks. Centrex is provided by dial switching equipment located on telephone company owned or leased premises. Each centrex station is served by a direct line to the central office location. The physical configuration of lines and trunks is similar to that used for comparable PBX service.

Several types of trunks and lines are used to provide PBX-related services:

(1) A PBX is connected to the central office which normally serves it by PBX-central office (PBX-CO) trunks. These trunks appear as station lines at the central office equipment and may be arranged for inward, outward, or both types of operation.

(2) Stations collocated with their PBX are connected to it by PBX station lines. The station lines can be connected through the PBX to other station lines, PBX tie trunks, central office trunks, FX trunks, or WATS trunks.

(3) Inward WATS, WATS, FX, and LD trunks terminate in PBXs instead of individual stations. When these trunks are accessible by machine switching from PBX stations, special means are used to prevent multiple seizures.

(4) Centrex station lines connect telephone stations on the same premises as the attendant to the centrex switching machine.

(5) Outgoing traffic from a switched services network (SSN) switching machine is routed to the message network over local, FX, or WATS lines called A-type off-network access lines (A-ONALs).

(6) Incoming traffic from the message network to a switched services network is routed over local, FX, or inward WATS lines called B-type off-network access lines (B-ONALs). These lines connect the serving central office to a manual switchboard at the customer premises.

(7) Automatic call distributor (ACD) trunks connect an automatic call distributor to its normal serving office. An ACD is a switching arrangement that automatically concentrates large numbers of incoming lines to a smaller number of attended positions. This service is desirable for order-taking agencies such as airline reservation bureaus. Automatic call distributor trunks are treated in a manner similar to that applied to PBX-CO trunks from a transmission standpoint.

Class 2 Special Services

Class 2 special services are provided over lines or trunks which may be connected to the switched message network as the customer directs but the function of these circuits may not pertain to the message network. In this class, the loss objectives are selected so that the total loss of the several types of tandem special services circuits required to reach the message network does not exceed the maximum loss of an ordinary loop.

The same services are provided by PBX off-premises station (OPS) lines as by on-premises station lines except that the telephone station equipment is located remotely from the PBX as shown in Figure 12-3. Centrex and PBX off-premises station lines are similar except that the telephone station equipment for centrex is not collocated with the attendant.

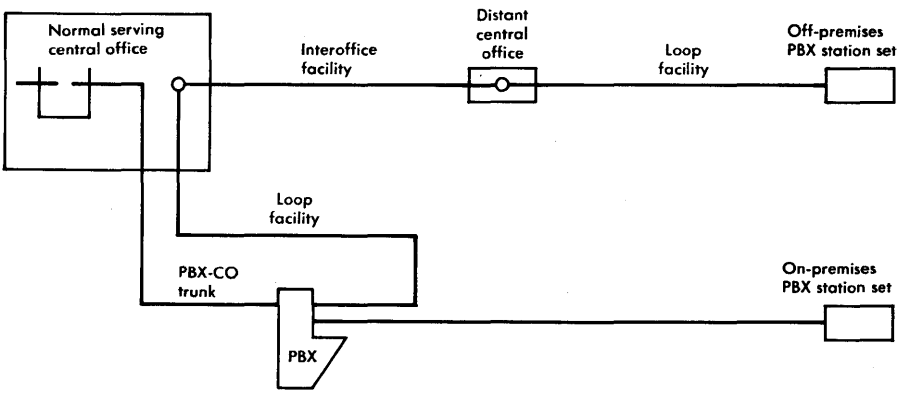

Figure 12-3. PBX on-premises station line and PBX off-premises station line.

Class 2 special services also involve the interconnection of PBXs by means of several types of tie trunks. *Satellite tie trunks* are used to connect a satellite PBX to its main PBX. *Nontandem tie trunks* are used between two main PBXs and are not switched to other tie trunks or other PBXs. These trunks are primarily intended for connection to PBX stations at both ends but may also be connected to central office trunks, FX trunks, and WATS trunks. Simultaneous connections to central office trunks, FX trunks, or WATS trunks at both ends of a nontandem tie trunk cannot be expected to provide good transmission.

Class 3 Special Services

Class 3 special services are those which are never connected to the switched message network. Included in this class are the point-to-point and multipoint configurations of dedicated private lines, i.e., lines for the private use of a customer. Class 3 services may be voiceband or nonvoiceband. For voiceband services in this class, the overall station-to-station transmission loss objective is similar to the average station-to-station loss objective for the message network. Following are descriptions of channels that are used for Class 3 special services:

(1) Channels for remote metering, supervisory control, and miscellaneous signalling purposes are, in essence, very low-speed data transmission channels. Both dc and ac transmission techniques are used.

(2) Voice or music program channels are used by broadcasters as studio-to-transmitter-site links, as intercity networks, etc. Special conditioning provides 5-, 8-, or 15-kHz bandwidths, as specified in the tariffs and as ordered by the customer.

(3) Data transmission channels can be ordered to provide various types of conditioning for voiceband data speeds or to provide various bandwidths for bit rates from very low teletypewriter speeds through wideband data speeds.

(4) Channels for two-point or multipoint voice transmission can be arranged. A wide variety of station equipment and any of several signalling schemes may be used depending upon customer needs.

(5) Video transmission channels are provided, usually one way, for television broadcast service. Usually, microwave radio

or shielded cable pairs are used to provide the required bandwidths. Full-time or occasional service is provided.

(6) Entrance facilities may be installed to extend a customer-provided communication channel to the customer premises, a distance not to exceed 25 miles, as covered in the tariffs.

(7) Private line digital data service is provided over the facilities of the Digital Data System (DDS). This system initially provides point-to-point DATA-PHONE digital service for bit rates of 2.4, 4.8, 9.6, and 56 kilobits per second.

Numerous other special applications exist to serve the specific needs of customers but those listed cover the majority of private line services. In addition, special service channels are provided to other common carriers. The specifications for such channels are based on a set of other common carrier facility tariffs.

Class 4 Special Services

Class 4 special services involve the interconnection of two or more special services circuits. Tandem tie trunk network (TTTN) switching arrangements, switched service networks (SSN), and the Enhanced Private Switched Communications Service are the physical means for providing these services. Transmission objectives for this class are stringent, as the services involve the possibility of multiple circuit connections within the networks as well as connections to the switched message network.

Tandem Tie Trunk Network. This type of network is considered to be a service arrangement and is covered in part by both interstate and intrastate tariffs. It is not covered as an entire network by any single tariff. End-to-end connection of tie trunks between PBX or centrex locations is permitted. Figure 12-4 illustrates a typical TTTN arrangement, having nontandem and satellite tie trunks (discussed in regard to Class 2 special services) as well as tandem and intertandem tie trunks. *Tandem tie trunks* are used between main PBXs and tandem PBXs. In larger tandem tie trunk networks, some tandem PBXs and/or intertandem PBXs may be connected; *intertandem tie trunks* are used to make such connections.

Each PBX within a tandem tie trunk network performs the normal PBX functions but additional features result from the organization of the network. Tie trunks connected to a PBX or centrex may be

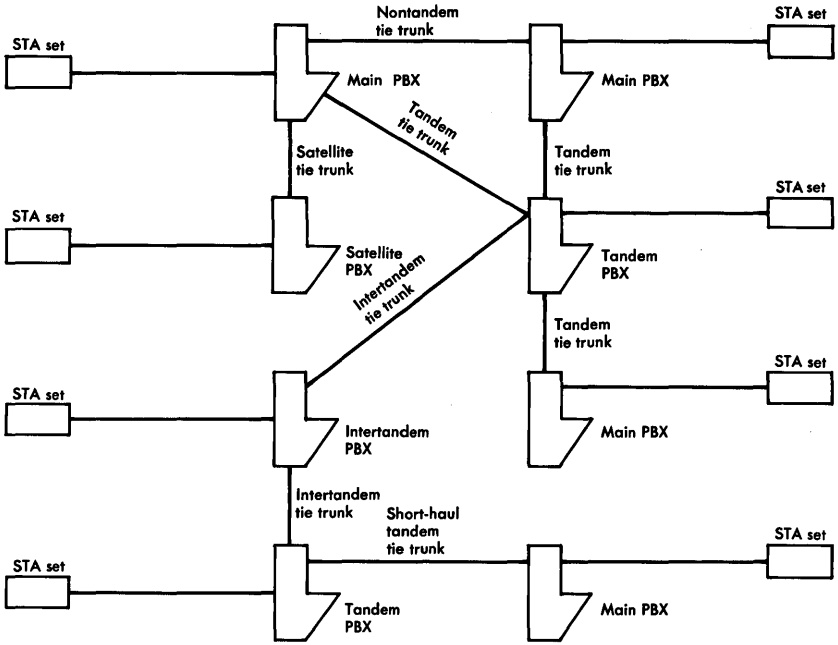

Note: Each PBX may have trunks to the message network in addition to those shown.

Figure 12-4. Tandem tie trunk network.

switched together by manual or automatic means. A caller or PBX attendant establishes a call by dialing a variable number of digits according to the requirements of the route selected. Such calls are advanced sequentially from PBX to PBX to establish the overall connection. A new dial tone is supplied for each step in the sequence. Manual or automatic connection to the message network can be provided but satisfactory transmission quality is not guaranteed. Inter-PBX station-to-station calling is also a feature.

Features not presently contemplated for TTTN arrangements include a uniform numbering plan throughout the network, code conversion or digit addition and/or deletion, automatic alternate routing, message detail recording, service observing, and standard tones and announcements. Lack of these features in a small TTTN may not present difficulties in the operation of the network. However, in a more complex network, such as that of Figure 12-4, increasing diffi-

culties may be experienced in establishing calls due to the large number of sequential dial tones and separate digit dialings and the required build-up in supervision. Also, since the components of a tandem tie trunk network are ordered piecemeal, a small network can grow into an unsatisfactory and complex arrangement unless close attention is given to routings and transmission performance.

Switched Services Networks. These networks provide private line services and utilize trunks and access lines linked by common control or stored program switching arrangements in order to switch calls between customer locations. The switching equipment is located in central offices and may be shared by other switched services networks and/or the message network. The equipment at customer locations generally consists of standard PBXs. The arrangement of common control switching machines is called the common control switching arrangement (CCSA). The central office switching equipment is billed according to the provisions of the CCSA tariff, while trunks, access lines, and other special services lines are billed according to the provisions of other tariffs.

The many features that can be provided by switched services networks make these networks very attractive to large business enterprises. Direct inward and outward dialing with a switched services network provide the capability of direct station-to-station calling between network locations and reduces the need for operators. Since a fully integrated numbering plan is used, each telephone in the network has a unique 7-digit number. Networks that utilize more than two switching machines can be arranged for automatic alternate routing. The administration of such matters as maintenance, traffic records, traffic engineering, and trunk group design is the responsibility of the Bell System. A sample of automatic message accounting records is provided to the customer as a practical means of allocating communications expenses among departments. Finally, automatic off-network completion of calls to the message network, an optional feature, allows calls from the switched services networks to be completed to locations off the switched services network. Off-network access lines (ONALs), provided at strategic points on the switched services network, are reached by selective routing arrangements.

There are two methods of organizing switched services networks, a hierarchical plan and a polygrid plan. The hierarchical plan is shown in Figure 12-5. While the hierarchical plan is similar to that of the

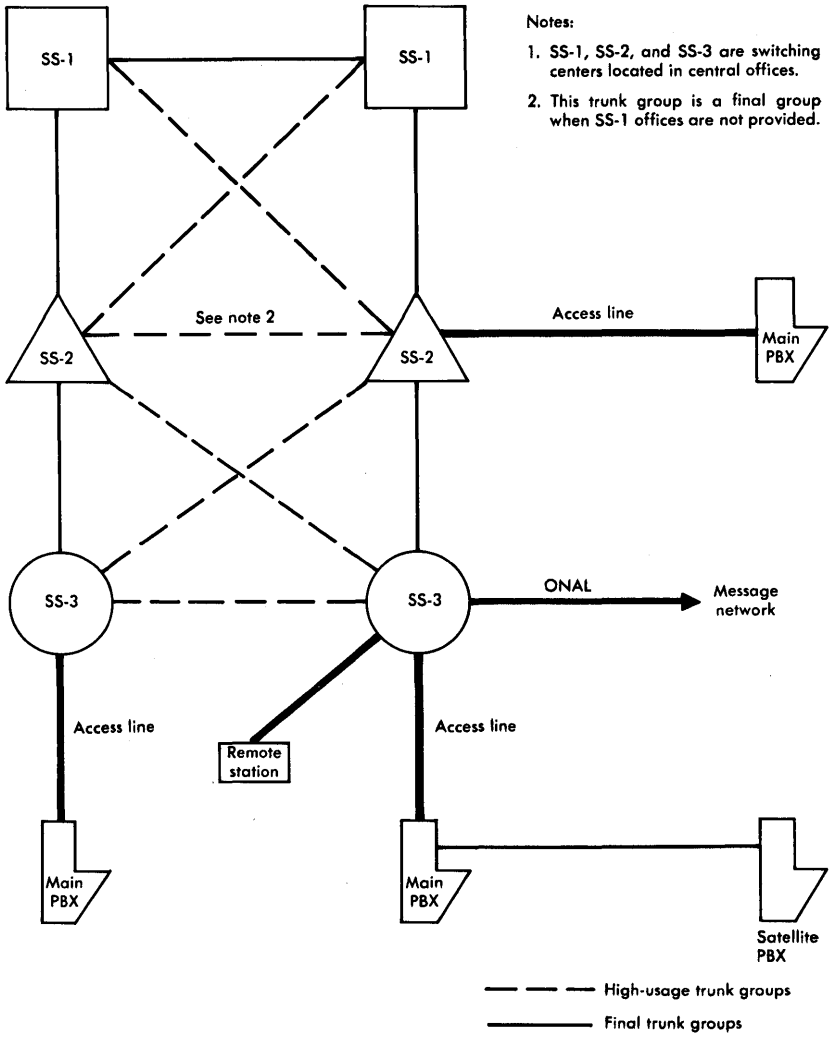

Figure 12-5. Switched service network, hierarchical plan.

message network, there are some differences due to service requirements. Economic restrictions may limit the number of direct (high usage) trunks to a customer location so that more trunks may be connected in tandem for a given connection than when direct trunks are provided as in the message network. The SS-1 class switching offices are required only for the largest switched services networks.

The polygrid plan consists of a structure of overlapping grids of interconnected switching machines, each serving a particular location for inbound and outbound traffic. All switching machines have equal rank in the polygrid network and are interconnected in such a way that a large percentage of them would have to be rendered inoperative before the network would be disrupted. Thus, the network is highly survivable and provides good assurance of call completion.

A large polygrid network is operated for the U.S. Government. This network, called the Automatic Voice Network (AUTOVON), has a number of unique features. With only a few exceptions, all transmission paths, including those through the switching machines, are four-wire, even to the station lines and station sets. In addition, a multilevel system of priority calling is included so that certain calls are given precedence over and may pre-empt calls of lower priority.

Several types of lines and trunks are used in switched services networks in addition to those defined previously. Those unique to SSN operation include the following:

(1) Access lines are circuits that connect main PBXs to class SS-1, SS-2, or SS-3 offices in a hierarchical plan (Figure 12-5) or to switching machines in the polygrid plan. These lines are normally four-wire facilities and terminate in a two-wire PBX or centrex office.

(2) Network trunks are circuits that interconnect SSN switching offices.

(3) Conditioned access lines are circuits between stations or PBXs and switching machines. These circuits are conditioned for gain and delay to make them capable of high-speed voice-grade data transmission.

(4) Conditioned network trunks have been conditioned for gain and delay to make them capable of high-speed voice-grade data transmission.*

Enhanced Private Switched Communications Service. When equipment is suitably arranged in a customer network configuration, this service (abbreviated EPSCS) provides channels to interconnect switching

*The AUTOVON uses a conditioning plan called *common grade*. In this plan, network trunks are not conditioned but special compromise equalizers on the access lines, along with normal equalization, make data transmission possible. The compromise equalizers compensate for the lack of trunk equalizers.

centers and various customer serving equipment such as PBXs, centrex machines, key systems, and data terminals. As a service particularly suited to the needs of large business customers, EPSCS provides many standard and optional features not otherwise available. While most of these features are switching-related, improved transmission performance relative to most other Class 4 special services is realized as well.

The standard features available with EPSCS include four-wire transmission from end-to-end. Where No. 1 ESS is used for switching, the four-wire paths are provided by HILO circuitry [1]. Thus, two-way simultaneous voice-frequency data transmission is possible between customer locations.

One or more attendant locations may be used to serve the network. Calls from within the network may be made to an attendant position by dialing a designated 3-digit or 7-digit code. Calls from outside the network that require the service of an attendant are automatically routed to the appropriate attendant location. A variety of service tones and announcements are also provided to a network caller to indicate the status of a connection.

Traffic network features include automatic alternate routing according to customer needs and bypass routing of calls from an originating switching center directly to the terminating station, PBX, or centrex (bypassing the terminating switching center). Originating call message details are provided at a Customer Network Control Center; details include date, originating switch identification, outgoing trunk group, and connect and disconnect times. Class-of-service restrictions, such as one-way outgoing, one-way incoming, or two-way service, are provided at switching centers to permit different calling capabilities on different channels.

The Customer Network Control Center is arranged to provide peg count, traffic usage, and overflow data on network channels. Message detail records, busy/idle channel status, channel maintenance status, and a list of unused channels are also made available at regular intervals. A number of customer-selected options may be exercised at the control center; these include changes in assigned user class-of-service codes, assignment of conferencing authorization codes, changes in call routing patterns, and day/night routing for services off the private network.

A 7-digit uniform numbering plan is used for network stations. Calls going outside the network are dialed by using a 10-digit code. Intranetwork station-to-station calls are dialed directly.

Maintenance features include channel scanning for abnormal conditions such as failure to respond to signalling and continuity failure. Channels that fail these and other call progression tests twice are automatically identified and taken out of service. Maintenance information of this type is transmitted to the Customer Network Control Center. Similarly, channels that are not used during prescribed busy-hour periods are reported to the control center.

Among the features that can be provided optionally is a call queuing arrangement for calls not completed because of busy channels on primary and alternate routes. Priority queuing is also available by using appropriate authorization codes.

Outgoing calls may be denied to specified originating channels when the calls are destined for selected public network central offices or numbering plan areas. Denied calls are connected to recorded announcements. Other optional features include customer-selected economical alternate routing patterns, automatic dialing capabilities, special recorded announcements, special screening of off-network calls, and the application of authorization codes as desired.

Transmission improvements result essentially from the use of all-four-wire facilities. The use of four-wire facilities reduces echo and provides two-way data transmission at reduced error rates.

Universal Service

Class 1 and Class 2 special services and, under some conditions, Class 4 services are intended to provide satisfactory voice transmission quality on most universal service connections. Universal service is defined as the interconnection between special services facilities and the message network at one point only on any one call. *In this arrangement, message network connections at both ends of the special services facility are not contemplated.* Also, while calls originating over one private line network may be routed via the message network to a second private line network, this type of connection does not always provide adequate voice transmission.

Lines provided for Class 1 and Class 2 services are generally capable of voice-grade DATA-PHONE transmission. Some limitations do exist,

however. For instance, long-haul foreign exchange DATA-PHONE service is generally limited to a calling radius of 200 miles from the foreign office.

Lines used for Class 4 service may provide satisfactory voice transmission on universal service connections utilizing PBX-CO trunks or ONALs. Calls within the special network should provide satisfactory transmission over a maximum of four tie trunks in tandem for voice signals and two tie trunks in tandem for data signals at rates higher than 300 bauds. A switched services network is engineered as an entity and should provide satisfactory voice transmission to stations served by the network. Data transmission to these stations is comparable to that furnished by the message network but special equalization is required in some cases.

Special Applications

Rulings of the Federal Communications Commission (FCC) have led to a number of special services arrangements that involve the interconnection of Bell System facilities and circuits with privately owned facilities and circuits. These arrangements include Other Common Carrier (OCC) connections and private line channel connections.

Other Common Carriers. Almost all of the previously described special services (Classes 1, 2, 3, and 4) may be provided by OCCs. The OCCs own and maintain long communications links (either terrestrial microwave or satellite systems) between major cities and provide service over additional facilities obtained from the Operating Telephone Companies to connect their terminal locations to an OCC premises or to a Bell System central office. The facilities available to the OCCs are provided under interstate tariffs; they may consist of a transmission facility terminated in an appropriate interface or both the transmission facility and a termination at a Bell System PBX, key telephone system, or central office. An example of an OCC-provided service arrangement is shown in Figure 12-6.

Private Line Interconnection. Interstate private line services, offered under FCC Tariff No. 260, were formerly provided to a customer premises if and only if the customer had a continuing need to originate and terminate communications at that point. This restriction has now been removed, thus enabling a customer to obtain interstate private line services terminated at any given location. This provision allows a customer to connect private line services covered by

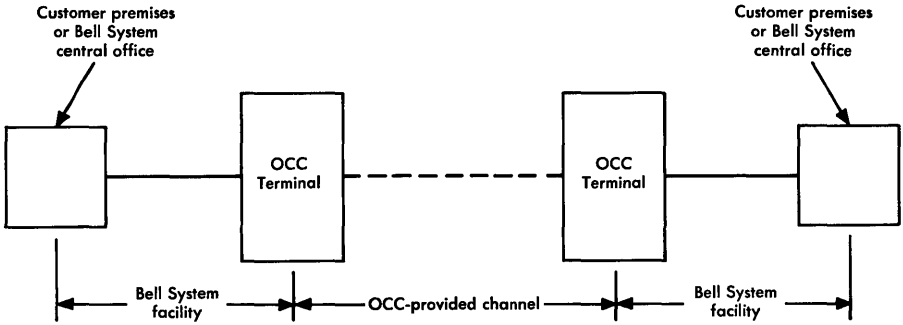

Figure 12-6. Typical OCC service arrangement.

Tariff No. 260 to a channel of a customer-provided communications system and to arrange a composite communications configuration comprised of an interstate private line service, a customer-provided channel, and a similar interstate private line service at the distant end of the configuration. A typical composite communications configuration is shown in Figure 12-7.

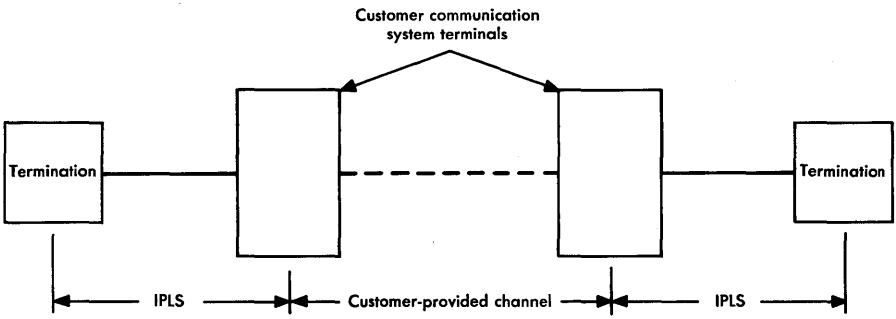

Note: IPLS is Bell System interstate private line service channel

Figure 12-7. Typical composite communications configuration.

12-3 COORDINATION AND ADMINISTRATION OF SPECIAL SERVICES

As the volume and complexity of special services have increased, it has become necessary to improve methods and procedures for handling special services orders. The need for standard administrative procedures for providing special services between Bell System opera-

ting areas had long been a recognized necessity and the intercompany services coordination (ISC) plan answered this need. However, to measure adequately the quality of the entire service provision process and to define standard manual methods which can evolve into an integrated mechanized information system, it is also necessary to have standard methods specified within each operating area. The Administration of Designed Services (ADS) System defines these standard methods and procedures for intra-area processing of special services orders.

Intercompany Services Coordination Plan

The ISC plan provides standard procedures to be applied to customer orders for special services involving two or more operating areas or companies within the Bell System. The plan also provides coordinating procedures for those orders involving independent companies. The ISC plan was introduced to satisfy a number of objectives and to overcome several deficiencies in the earlier, uncoordinated methods of operation. The dispersed responsibilities of various units of the Bell System often made it necessary for a customer whose operations extended over several operating areas to deal with each of the involved Bell System operating units in setting up special services arrangements. The ISC plan makes it possible to deal with just one Bell System contact, thus presenting a one-company image to the customer.

Service needs are specified on a standard service order document, the use of which is required by the ISC plan. The plan provides flexibility in the coordinating arrangements so that service requirements can be met regardless of size or complexity. The plan enumerates organizational responsibilities for all intercompany and interarea service activities within the scope of the plan and provides effective control and aid in meeting service due dates. Means are included for measuring the effectiveness of special services provision and of evaluating customer satisfaction after service has been initiated. Finally, the use of a standard language is specified and system-wide communication paths are established.

The ISC plan covers most Class 1 special services such as WATS, DATA-PHONE, and FX services which are interarea or intercompany in nature. In addition, the plan covers private line services (such as Class 3 services) which extend interarea or intercompany and use

dedicated facilities. Network program and network television services are excluded, however, because other procedures unique to the needs of these services have been established.

The coordination functions specified by the ISC plan are fulfilled by permanent, interdepartmental ISC teams, one of which is established in each associated company area and each Long Lines area. Each team member represents his department (or company, as in the case of Western Electric team members) in fulfilling ISC responsibilities. Representatives from organizations other than those specified in the plan are asked to serve as required.

The ISC teams are charged with the primary responsibility to schedule and coordinate all sales, engineering, plant, supply, installation, traffic, and customer training activities related to special services orders. An area team serves as a single point of contact in its area and maintains communication through designated channels with the ISC team responsible for the control of an entire service order. Each team is also responsible for providing local portions of the service in accordance with local practices. In addition, a team serves, when required, as the control team to control and coordinate the implementation of a complete special services order.

Administration of Designed Services

While the ADS is a system of methods and procedures and may encompass the operations of several departments, it is not an organizational entity. Methods and procedures under ADS apply to an operating area of an operating company. The system may be applied to other sizes of operating units depending upon the volume of special services orders and various characteristics of their geographic areas as determined by the individual company. The system is composed of five subsystems—order-writing, design, distribution, completion, and control. Figure 12-8 is a diagram of the work functions involved.

The order-writing system accepts inputs from the marketing or commercial negotiator or from the ISC team. These inputs encompass all service orders for special services, supplements to service orders, and service inquiries. The basic functions of the order-writing subsystem are to review the orders to make certain that they are reasonable, complete, and in the appropriate format, to forward them to the design subsystem for screening, and to enter the initial inputs to the control subsystem.

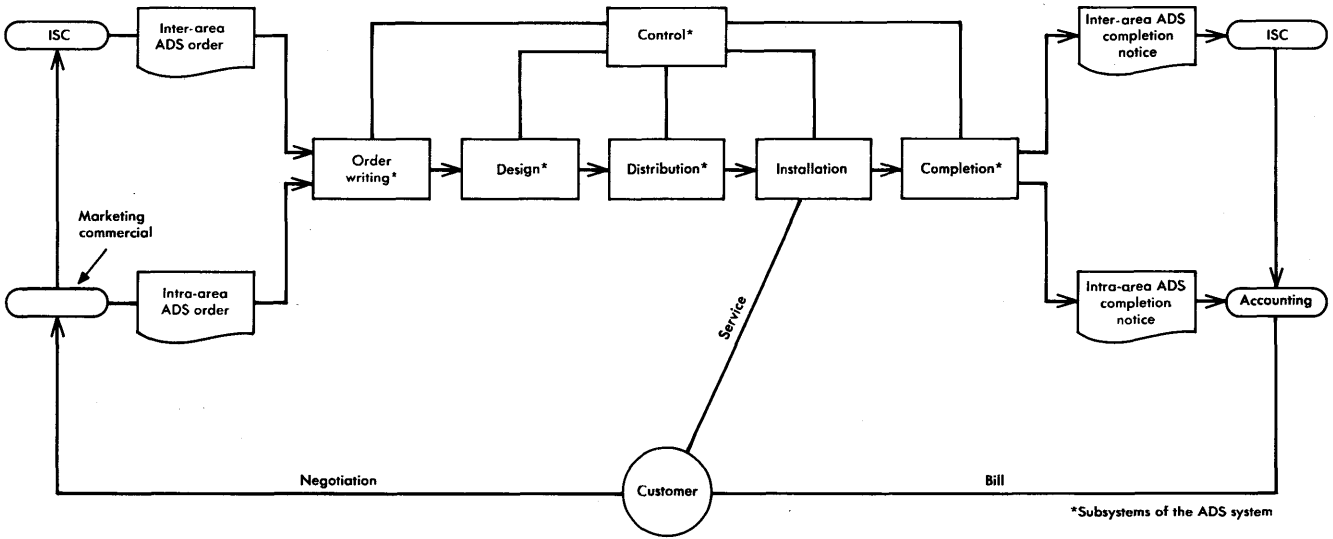

Figure 12-8. ADS functions.

The design subsystem encompasses five processes—screening, circuit layout selection, station layout selection, work order record and detail (WORD) or circuit layout record card (CLRC) preparation, and record administration. In the screening process, all orders for special services are reviewed, information regarding the availability and transmission characteristics of local channels is obtained and recorded, and all incoming orders and associated documents are coordinated. In circuit and station layout, service requests are evaluated, specific layouts are selected, and facilities and equipment are reserved or assigned. The layouts must be selected so that Bell System standard design objectives are met. The preparation of WORD or CLRC documents involves design computations, the results of which are entered on the WORD or CLRC form. All layout data is forwarded to the distribution subsystem. Finally, the maintenance of the pending and completed circuit files for the design subsystem is accomplished by record administration.

The distribution subsystem provides for the correlation, assembly and distribution of service orders, WORD or CLRC data, and other associated documents to implement the installation of the circuit and equipment. This subsystem utilizes distribution facilities provided by the operating company. The distribution of documents must be made to the required locations in sufficient time to allow for installation and tests.

The completion subsystem receives and forwards reports regarding completed installations both internal and external to the ADS system. Additional completion information, such as register readings and transmission measurements, may be forwarded with the completion report.

The control subsystem monitors and controls the status of service orders. The critical dates in the life of the service order are continually monitored, and control data and reports are made available to involved locations. Information is provided to assist in the administration of work activities. The acronym OSCAR refers to the functions of this subsystem—order status, control, and reporting.

Work Order Record and Details. A master circuit record, the WORD, consists of three kinds of records for voice-frequency services: (1) the work authorization, (2) circuit details, and (3) test details. The CLRC is the master circuit record for nonvoice-frequency services. Other

circuit related information not included on the WORD or CLRC documents (such as division of revenue data) is recorded on a separate document.

The WORD document combines service or circuit orders, CLRCs, and circuit order test results forms. There is a separate WORD for each circuit. The work authorization corresponds to and replaces the need for a circuit, trunk, or special services order; the service order is not replaced for all its present functions but the WORD document contains all the information needed to install and maintain the circuit. Circuit details contain the sequential makeup, facility assignment, and transmission level point information. Test details include the required tests, expected values and limits, space for recording test results and, when completed, acts as the order completion report and office record of test results. The WORD is designed to use a common language format.

Common Language Special Services Designations. The Bell System common language circuit identification plan provides a coded designation by which a special services circuit may be identified. This designation is in a form that people can read and understand and yet may be applied to both manual and mechanized procedures [2].

The designations for special services circuits are written in one of three standard formats; telephone number format, serial number format, or message trunk format. The telephone number format is used when a circuit can be identified by a unique telephone number and extension or trunk code. The serial number format is used only when the circuit being identified cannot be uniquely defined by a telephone number. A few special services trunk types use the message trunk format discussed in Chapter 6 and shown in Figure 6-5.

The coded information presented in the telephone number format consists of 24 alphanumeric characters entered in designated spaces for primary and secondary data, as shown in Figure 12-9. The pri-

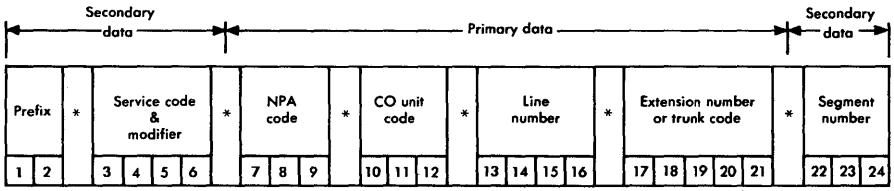

Figure 12-9. Common language telephone number format.

mary data is used to identify a circuit on the customer premises. The secondary data contains additional information which, in conjunction with the primary data, is to be used on internal company records for complete circuit identification.

The portion of the telephone or serial number formats relevent to this discussion is contained in positions 3 through 6, service code and modifier. Character positions 3 and 4 represent the appropriate service code, such as FX for foreign exchange, VE for educational television, etc. Standard 2-character codings have been established for all appropriate special services circuits. Position 5 contains N, D, or A to signify nondata use, data use, or alternative data-nondata use, respectively. Position 6 contains T or C to signify all telephone company-provided or all or part customer-provided equipment and facilities.

Interrelationship of ISC and ADS

The ISC plan was the first major step in defining standard administrative methods for the provision of interarea services. This plan was introduced in response to the growing service needs of geographically dispersed customers. No attempt was made to standardize the existing service provision methods for intra-area services.

To improve special services provision further and to lay the groundwork for future mechanized procedures and records, ADS has been documented and implemented to standardize intra-area procedures. Presently, ISC and ADS are separate but interlocking plans for special services provision only; it is anticipated that the plans will ultimately merge. The addition of other designed services, such as trunks provision and carrier system provision, is also contemplated.

Tariffs

Telephone companies file tariffs with regulatory agencies to describe services and to propose schedules of charges. The companies are legally bound by tariffs that have been approved by regulatory agencies. Interstate services are specified by tariffs filed with the FCC; intrastate services are specified by tariffs filed with state or local public service commissions. Bell System tariffs filed with the FCC are coordinated, prepared, and maintained by the American Telephone and Telegraph Company; tariffs filed with state and local commissions are coordinated by the operating telephone companies.

Intrastate services may thus vary from one company and regulatory agency to another; as a result, service offerings may not be uniform for a customer who operates within the territories of several telephone companies.

REFERENCES

1. American Telephone and Telegraph Company. *Telecommunications Transmission Engineering*, Volume 2, First Edition (Winston-Salem, N. C.: Western Electric Company, Inc., 1977), pp. 194-195.
2. Wright, A. J. "Where Things Are — In Common Language," *Bell Laboratories Record*, Vol. 55 (July/Aug. 1977), pp. 192-197.

Chapter 13

Switched Special Services

There are many special services which may be switched either through the public network or through private switching machines and networks. These services may be classified according to whether they are connected directly to the switched public network. Class 1 services are always switched through the public network and are further divided into two subclasses, PBX related and non-PBX related. Class 1, PBX-related services utilize PBX-CO trunks, foreign exchange (FX) trunks, wide area telecommunications (WATS) trunks, long distance (LD) trunks, and automatic call distributor (ACD) trunks. Class 1, non-PBX-related services include FX lines, WATS lines, off-premises extension (OPX) lines, and secretarial lines. Class 2 services are always PBX related and may or may not be switched through the public network as the customer directs. These services utilize off-premises station (OPS) lines and satellite and nontandem PBX tie trunks.

A significant percentage of switched special services circuits are long-haul, defined as those having more than 6-milliseconds round-trip echo delay. Circuits having 6-milliseconds or less delay are defined as short-haul. The long-haul circuits must be designed with specified minimum losses according to the VNL design plan in order to control echo. The short-haul circuits are designed to have a fixed loss consistent with stability, noise, and other criteria. Four-wire, voice-frequency circuits are short-haul at distances less than approximately 30 miles; longer circuits are long-haul. The equivalent change-over distance for a carrier channel is at about 200 miles. Other special services that involve switching, such as centrex, tandem tie trunk networks, switched services networks, and the Enhanced Private Switched Communications Service are discussed elsewhere in this volume.

13-1 CIRCUIT DESIGN

While the details of the design process for a particular special service vary with company and organizational methods, some basic elements are common. The process is initiated by a service order which specifies the type of service desired. Tariff and technical requirements must be considered throughout the design process. The tariff legally defines the features and rates of the service offering. The technical requirements involve such things as signalling, loss and noise objectives, telephone set current (if the service terminates in a telephone station set), and stability. In addition, data services may require control of impulse noise, slope, and delay distortion. While all are specific items, they interrelate; a change to improve a circuit from one standpoint may degrade it from another.

Illustrative Design

Consider the design process for a foreign exchange service. The customer location influences the loop facility assignment, length, gauge, loading, and any bridged tap at the customer end of the circuit. Generally, the loop layout should be determined before the interoffice facility is selected since the interoffice facility can often compensate for loop resistance and loss. Signalling capability must be checked and station set current must be computed to determine if a dial long line (DLL) unit is required.

Transmission gain requirements must be considered next in the design process so that repeater types and locations can be selected. Two limitations on the allowable repeater gain (stability and crosstalk) influence the location of the repeater of the dial long line unit and may even require a second repeater. If a dial long line unit must be relocated to improve circuit stability, the design process must be reviewed to verify that signalling and supervision requirements are still met. Where relocation of the dial long line unit results in signalling and supervision which are still out of limits or where gain and stability requirements cannot be met, a higher grade of interoffice facility, such as a coarser gauge cable pair or a carrier system with its appropriate signalling application, may be required. When the circuit layout is complete, it should comprise facilities representing the best possible balance among performance, customer satisfaction, technical requirements, and economy.

Design and Analysis Aids

Two concepts have been developed to assist in special services circuit design. These are called the standard design concept and the universal cable circuit analysis program.

Standard Designs. Special services circuits of standard designs offer the advantages of thoroughly tested circuit layouts capable of meeting requirements on net loss, transmission response, stability, and balance. The layouts are fitted to specific situations by first selecting the general facility on the basis of availability. The number of links (loop facilities or interoffice facilities) and the associated loss and signalling requirements for each link of an overall circuit must then be determined. Access circuits, such as FX lines and trunks, are usually composed of one loop facility and one interoffice facility; nontandem tie trunks and off-premises station lines may be composed of two loop facilities and one interoffice facility. After the general facility type is selected, the detailed locations and adjustments of repeaters, dial long line units, etc., can be established.

To illustrate, consider the standard design of PBX-CO trunks which do not require terminal balance. Figure 13-1 lists the design codes and maximum losses for various facility types. Facility losses are shown prior to the application of repeater gain. When the design code is determined, the dc resistance is calculated and signalling equipment is selected to be compatible with central office type, PBX type and impedance, and required signalling features.

TYPE OF FACILITY			MAX 1-kHz INSERTION LOSS, dB	DESIGN CODE
2-wire VF	Nonloaded	Nonrepeatered	3.5	1
		Repeatered	6.2	2
	Loaded	Nonrepeatered	3.5	3
		Repeatered	8.0	4
4-wire VF	Nonloaded	Repeatered	9.0	5
	Loaded	Repeatered	12.0	6
Carrier (out-of-band signalling)			—	7

Figure 13-1. Standard design codes for PBX-CO trunks.

Figure 13-2 shows four possible two-wire layouts, nonloaded cable (codes 1 and 2) and loaded cable (codes 3 and 4). These layouts may be used for the majority of PBX-CO trunk lengths. Occasionally when a longer trunk is required, a four-wire design must be employed.

Figure 13-3 shows two four-wire layouts, one employing dc signalling and the other employing ac signalling. In either case, the cable pairs may be loaded or nonloaded. Transmission paths are shown by heavy lines. Signalling leads A, B, SX, and SX1 provide access to the signalling path for connection to dial long line units or for connections to single-frequency signalling units.

Universal Cable Circuit Analysis Program. This computer program, called UNICCAP, is intended to be used as an engineering tool in analyzing a wide variety of cable circuit transmission problems. The program provides rapid computations of insertion loss, measured loss, bridged loss, return loss, echo return loss, singing return loss, input impedance, output impedance, envelope delay distortion, peak to average ratio (P/AR), and other parameters. On the basis of these data, it is possible to determine where changes can be made to optimize the circuit or meet requirements.

13-2 SIGNALLING AND SUPERVISION

Signalling is a vital part of switched special services that must be considered throughout the design process to ensure proper operation of the circuit. To illustrate primary signalling functions, facility features, and customer options, consider the signalling aspects of foreign exchange service which are typical of Class 1 special services. In foreign exchange service, access to the public network is of special interest because it is gained through a central office other than the normal serving central office.

Primary Functions

Signalling requirements for FX service are essentially the same as those for ordinary subscriber line service. Sufficient current to operate supervisory equipment at the foreign central office when the station goes off-hook must be provided. To accomplish this, a means of repeating or reinserting the loop closure signal is sometimes required in dial long line or other FX circuit units. Transmission of undistorted dial pulse or TOUCH-TONE signals from the station

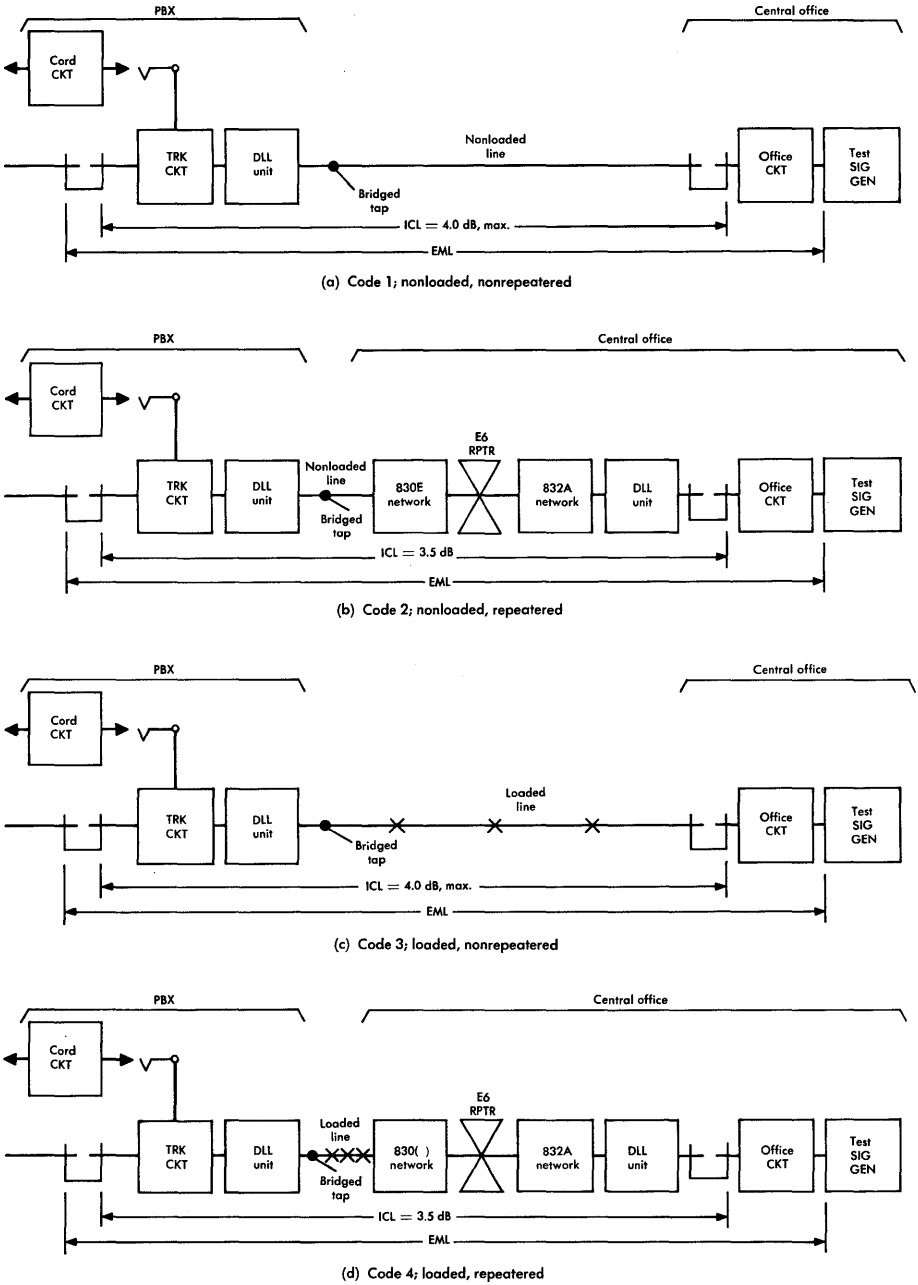

Figure 13-2. Two-wire PBX-CO trunk designs.

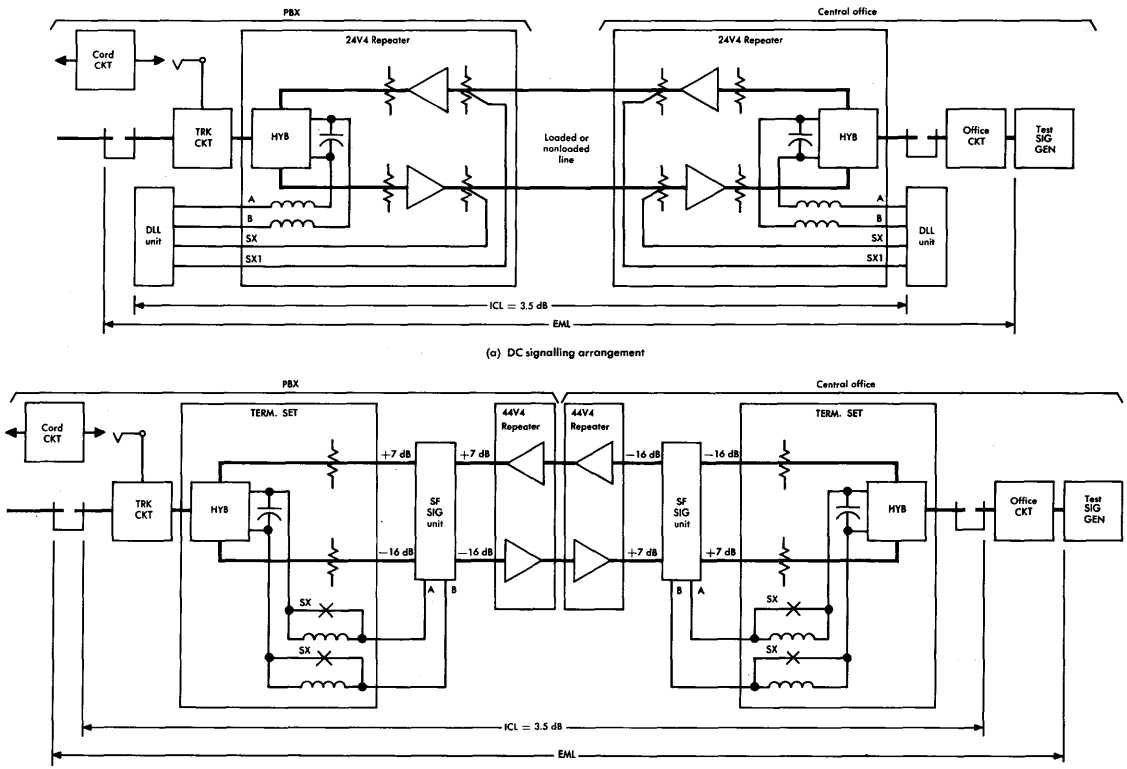

Figure 13-3. Four-wire PBX-CO trunk designs, codes 5 and 6.

to the foreign central office is necessary and a means of repeating or regenerating dial pulses is required. The FX circuit must also be capable of transmitting ringing signals to the station set from the central office. Because FX circuits may be quite long, circuit units must be capable of repeating or reinserting ringing current where required. The circuit must be capable of removing the ringing current (ring trip) when an incoming call is answered. Normally, the line circuit in the central office trips ringing when the line relay operates. In some existing DLL circuits, however, a loop closure cannot be detected during the ringing interval. The ringing signal would be heard in the receiver. Although not a serious form of impairment, the phenomenon is annoying to many listeners.

When an FX circuit terminates in a station set or a manual PBX switchboard, the subscriber line circuit at the central office detects an off-hook condition by the operation of a line relay in series with the transmission pair. This is called *loop start* operation. With loop start, the only incoming call indication received at the station or PBX is a ringing signal which has a 2-second on, 4-second off cycle. Consequently, there may be a delay of up to 4 seconds before a seizure indication is transmitted. Since a second seizure from the PBX end of the circuit may occur during the silent interval, loop start operation is clearly unsatisfactory for FX trunks serving a dial PBX.

The likelihood of dual seizure can be virtually eliminated by another type of operation called *ground start.* With this arrangement, battery is supplied to the ring side of the line through the winding of the central office line relay. A call is initiated from the PBX by grounding the ring lead to operate the central office line relay. When a dial tone connection is established in the central office, ground is placed on the normally open tip lead. This causes the removal of the ground on the ring lead at the PBX and normal tip and ring connections are made at both ends of the circuit. Thus, with an outgoing call, the line is made busy as soon as the line relay operates and a second central office seizure is made impossible. On an incoming call, ground is placed on the normally open tip lead as soon as the central office equipment seizes the line for ringing. This ground provides a busy indication at the PBX so that the circuit cannot be seized at that end. Thus, seizure is immediately indicated on both incoming and outgoing calls. In addition, ground-start operation provides central office disconnect information to the PBX. This information is the basis for a *forward disconnect* feature.

The forward disconnect feature, not available in many existing circuits, enables a PBX or automatic call distributor to recognize an abandoned incoming call and to release the connection. Without this option, an abandoned call is not released and the trunk continues to appear busy until an attendant answers. This feature is especially important for automatic call distributors such as might be used at airline reservation offices. If not provided, other callers are prevented from using the FX trunk and waiting time is lengthened for the incoming call queue.

A *hold PBX busy* feature is required to prevent premature incoming seizures of FX trunks. At the end of a call on an FX trunk, there may be a delay between the time the central office subscriber line circuit releases and the PBX extension disconnects. The FX trunk should appear busy during this delay to prevent seizure by central office switching equipment.

Features and Options

Some special services signalling functions are performed to serve the needs of transmission facilities or to provide desired optional features. These features may be illustrated by further discussion of FX service.

Dial long line equipment must be carefully selected to satisfy operational needs. For example, it may be necessary to choose a DLL unit capable of supplying idle circuit terminations or controls for disabling E6-type repeaters to prevent singing on idle circuits. Another feature that influences the selection of a DLL unit is that of starting a ringing machine. At some PBXs, continuous operation of a ringing machine is uneconomical; at such locations, it is desirable to include the ability in the DLL unit to start the ringing machine when an incoming ringing signal from the central office is first detected.

Single-frequency signalling is commonly used on special services circuits. The 2600-Hz signal is keyed at a 20-Hz rate to indicate ringing on a line. Since the 2600-Hz signal is off in the talking condition, band-elimination filters are not required and there is no impairment to transmission. The single-frequency signal is also used to transmit dial pulsing information.

With toll diversion, access to the toll network may be denied to selected PBX stations. When a call is placed to a destination outside

the foreign exchange area, a battery reversal signal is transmitted through the toll connecting trunk back toward the PBX. The FX circuit unit (DLL) detects this signal and, if the extension is to be denied toll access, causes the connection to be diverted to an intercept operator or to a source of tone.

In those areas where billing for local calls is on a message unit basis, message registers are required at hotels and motels to expedite the charging process for calls. Remote message register operation is implemented by means of a signalling channel separate from the FX channel.

Signalling Systems

Generally, switched special services circuits utilize dc or ac signalling systems similar to those normally used in the public message network. In special services applications, precautions must be taken because equipment and facilities are used in a manner significantly different from public network applications.

DC Signalling. The maximum distance over which dc loop signalling may be used is limited by the dial pulsing range, the supervisory range, the ringing range, the ring tripping range, transmission considerations, or by some combination of these factors.

Maximum ranges have been determined for various types of dial long line units. Ranges are stated in terms of circuit resistance external to the DLL and, where appropriate, are based on a minimum direct current of 23 mA supplied to the station. Figure 13-4 shows typical loop resistance limits for a loop start signalling arrangement which permits the extension of the normal limit of central office or

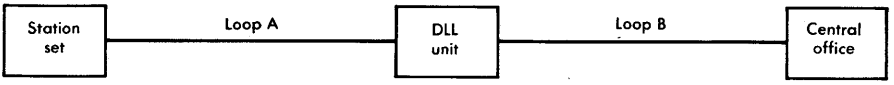

DLL VOLTAGE	LOOP A* RESISTANCE, OHMS	LOOP B RESISTANCE, OHMS
48	0-1800	0-1400
72	1000-2900	0-1400

*The station set resistance is included in loop A.

Figure 13-4. Typical access line resistance limits (loop start).

PBX equipment on voice-frequency facilities. A sensitive relay in the DLL repeats the dial pulses toward the central office and provides a low-resistance battery feed circuit toward the station. This circuit also reapplies 20-Hz ringing current toward the station. The maximum signalling ranges of this arrangement are shown in the figure. When E-type repeater equipment is used, the resistance of the repeater and its building-out network must be included as a part of the maximum range of the dial long line circuit. No more than two dial long line units may be used in tandem unless pulse correction is provided. With appropriate signal conversion equipment, standard dc signalling arrangements (simplex, duplex, or composite) may be used.

AC Signalling. The dc circuit arrangements are normally limited to relatively short facilities because of signalling and transmission requirements. When the circuit includes multilink carrier channels or a channel in a carrier system without built-in signalling, single-frequency ac signalling arrangements are generally used. Single-frequency (SF) signalling circuits convert the loop signal to a 2600-Hz signal. This inband signal readily passes through the voice path eliminating the need for signal converter circuits at intermediate points of the facility when several carrier systems are used in tandem.

A number of single-frequency signalling units are available for use in special services circuits. In the latest type, provision is made in one unit, used in all applications, for the connection of pads, echo suppressors, and equalizers. Additional auxiliary units are used at both the station and central office ends of each circuit. Different auxiliary units are used for two-wire and four-wire applications and for 600-ohm and 900-ohm impedances.

Signalling Requirements for PBX Stations

With cut-through operation, where dc continuity from the central office to a PBX station set is established through the PBX, dial pulsing and supervision on connections to the public message network must be provided over the PBX station line, through the PBX, and over the PBX-CO trunk. The overall resistance from the station to the serving central office must be within established limits. Range charts (described in Chapter 4) have been produced to summarize these resistance limits for various types of PBXs and central offices. If the limits are exceeded, dial long line equipment or other appropriate signalling extension techniques must be employed.

In addition to signalling through the PBX to central office equipment, stations must also signal and supervise to the PBX. Normally, loop resistance from an on-premises station to the PBX is within the limits specified in the appropriate range chart. Occasionally, an on-premises station is distantly located from the PBX so that the resistance limit is exceeded and almost all off-premises PBX stations exceed station-to-PBX limits. In these cases, a DLL or other signalling extension method may be needed to bring the station within range of the PBX regardless of any other treatment necessary to signal the serving central office.

Figure 13-5 illustrates a relatively complex service arrangement, i.e., an off-premises station connected to a remote central office over an FX trunk. The detailed layout must simultaneously meet the requirements of (1) station-to-PBX signalling, (2) station-to-FX-office signalling, (3) PBX attendant-to-FX office signalling, and (4) normal station set current. With this arrangement, 48-volt DLL units are used. Loop A may have a resistance of 0 to 1800 ohms (including the station set); the resistances of loops D and B + C may be 500 to 2300 ohms each.

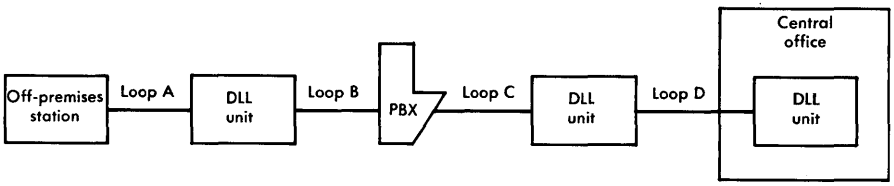

Figure 13-5. Typical off-premises station connection to central office.

Satellite and Nontandem PBX Tie Trunk Signalling

A tie trunk can be arranged for manual or dial selection at either end by attendants or for dial selection at either end from stations. A connection is made to a manually selected tie trunk by plugging into the tie trunk jack on the switchboard or by operating a key on a console. For a manual PBX, only manual selection is possible. For manual auxiliary switchboards or PBXs with consoles, both manual and dial selection can be used. With dial selection, the trunk is connected to the switching equipment of the PBX and is reached by dialing a tie trunk access code. In all cases, one of several signalling arrangements may be provided.

Tie trunks can be described in terms of use and method of completing incoming calls. Use is one-way only or two-way; one-way trunks are designated incoming and outgoing at the appropriate ends. Call completion methods are dial, ringdown, and automatic. Dial tie trunks provide dial selection of the desired station or trunk. On ringdown tie trunks, a 20-Hz ringing signal is manually initiated to alert the distant PBX attendant who then completes the call. Neither the originating nor terminating PBX attendant receives "answer" or "disconnect" cord signals from the trunk. Automatic tie trunks alert the PBX attendant at the distant end immediately upon seizure; a 20-Hz ringing signal is not transmitted. "Answer" and "disconnect" cord signals are provided at both the originating and terminating PBXs.

The three main types of tie trunks are two-way dial, two-way automatic, and two-way ringdown. However, any of the three call completion methods may be used in one direction while a different method is used in the other direction. An example is a one-way dial, one-way automatic tie trunk used between a dial PBX and a manual PBX. The tie trunk used is based on the type of operation desired.

Both dc and ac signalling systems are used to convey information from one PBX to the other. The dc method is normally used in the trunk circuit; where necessary, it may be converted to or from single-frequency ac in a connecting circuit.

13-3 VOICE TRANSMISSION CONSIDERATIONS

In switched special services, the satisfactory transmission of speech signals is maintained by imposing design and operating transmission objectives. The types of circuits to which these objectives are applied include foreign exchange, long distance, and wide area telecommunications service circuits. The objectives are also applied to PBX-CO trunks, nontandem tie trunks, and PBX station lines. Other circuits (not discussed in detail) that are covered by similar objectives include secretarial service lines and off-premises extensions.

Loss

Switched special services circuits are designed to meet loss objectives based on the VNL plan. When loss objectives are met, volume, noise, stability, and echo performance are satisfactory on the majority of connections.

When short-haul circuits may become links in long built-up connections involving VNL design, they must be designed to have a loss of at least VNL + 2 dB; however, to reduce design effort and to ensure echo and stability margins, a minimum loss of 3.5 dB has been adopted as the objective for short-haul circuits.

Loss Calculations and Measurements. The losses of switched special services circuits are expressed in terms similar to those used in the public switched network. In special service applications, the terminology is applied to customer lines as well as to the various types of special services trunks. The terms include inserted connection loss (ICL), expected measured loss (EML), and actual measured loss (AML).

Inserted Connection Loss. As with message circuit trunks, the ICL is defined as the 1-kHz loss between originating and terminating outgoing switch appearances for trunks. For customer lines, it is the 1-kHz loss between the line side of the switch and the station set. Included are the losses resulting from connections between different impedances, e.g., between a 600-ohm PBX and a 900-ohm class 5 office.

Expected Measured Loss. To assure that measured loss values agree with design values, the EML is computed as the 1000-Hz loss between two readily accessible points having specified impedances. It includes the ICL plus switching circuit or cord circuit losses, test pad loss, switchable pad losses, and test equipment connection losses. Thus, it is important to specify properly the originating and terminating switches since different specifications may result in different losses.

Actual Measured Loss. The AML is the measured 1-kHz loss between the same two access points as those for which the EML is computed. Test sets should have impedances equal to the nominal impedances assigned to the switching machines at which they are located. For special services lines, the detector or oscillator impedance at the station end should be equal to a 600-ohm resistance. Because of the high impedance of the on-hook station set, it need not be physically disconnected from the line when making the measurement.

All routine loss measurements should fall within the maintenance limits established for the EML. When measurements fall outside the maintenance limits but do not exceed the immediate action limits, routine maintenance action is indicated. If the AML falls beyond the immediate action limits, corrective maintenance action must be taken to clear the trouble condition as soon as possible.

Objectives. Design objectives for Class 1 and Class 2 special services circuits are given in Figure 13-6. Values of EML must be derived from the ICL by adding the losses incurred in the test equipment connections.

In certain applications, adequate transmission performance results if modified ICL objectives are applied for nontandem and satellite tie trunks. Short-haul two-wire tie trunks may be designed to an ICL of 4.0 dB with gain and up to 4.5 dB without gain. All four-wire tie trunks may be designed to VNL + 4.0 dB or to VNL + 2S + 2.0 dB where switchable pad operation is used. However, if the tie trunks can be switched to other tie trunks, if they can be used in universal service connections, or if these capabilities are contemplated to meet future needs, the objectives in Figure 13-6 should be applied.

Grade-of-Service Considerations. To illustrate the importance of meeting ICL objectives, the grade of service for the connection of Figure 13-7(a) may be compared for two assumptions of FX line

CIRCUIT TYPES	ICL OBJECTIVE, dB		
	SHORT-HAUL		LONG-HAUL
LINES	WITH GAIN	WITHOUT GAIN	
FX	3.5	0-5.0	VNL + 4.0
WATS to class 5 office	3.5	0-4.0	VNL + 4.0
WATS to toll office	4.5	4.0-5.0	VNL + 4.0
OPX	3.5	0-6.0	VNL + 4.0
Secretarial	3.5	0-6.0	—
On-premises PBX station	—	0-4.0	—
Off-premises PBX station	4.0	0-4.5	VNL + 4.0
TRUNKS			
PBX-CO and ACD-CO	3.5	0-4.0	—
FX and ACD-FX	3.5	0-4.0	VNL + 4.0
WATS to class 5 office	3.5	0-4.0	VNL + 4.0
WATS to toll office	4.5	4.0-5.0	VNL + 4.0
LD	4.5	4.0-5.0	VNL + 4.0
Satellite tie	VNL + 2S + 2S	VNL + 2S + 2S	VNL + 2S + 2S
Nontandem tie	VNL + 2S + 2S	VNL + 2S + 2S	VNL + 2S + 2S

Note: 2S = 2-dB switchable pad.

Figure 13-6. Special services circuit ICL objectives.

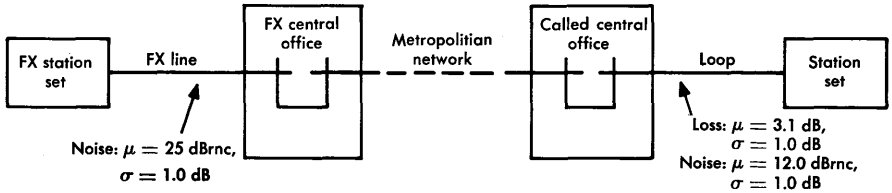

(a) Special service connection

FX LINE ICL, dB	NETWORK LINKS	LOSS		NOISE		GRADE OF SERVICE	
		μ, dB	σ, dB	μ, dBrnc	σ, dB	GOOD OR BETTER, %	POOR OR WORSE, %
$\mu = 5.0$ $\sigma = 0.1$	Intrabuilding	8.1	1.0	22.5	3.3	84.7	3.7
	One link	12.4	1.4	20.5	3.9	90.3	3.5
	Two links	13.7	1.4	20.0	3.5	88.3	4.3
	Three links	15.1	1.8	20.6	2.6	84.8	5.8
	Four links	16.7	2.0	20.5	2.2	80.0	8.1
$\mu = 8.0$ $\sigma = 0.1$	Intrabuilding	11.1	1.0	22.3	3.2	91.4	3.1
	One link	15.4	1.4	20.4	3.6	83.5	6.4
	Two links	16.7	1.4	20.4	3.4	80.0	8.1
	Three links	18.2	1.7	20.5	2.7	74.3	10.9
	Four links	19.7	1.9	20.5	2.3	68.5	14.1

(b) Loss, noise, and grade-of-service relationships

Figure 13-7. ICL effect on grade of service for an FX line.

ICL. In the first case, the FX line is assumed to have an ICL of 5 dB, which just meets the maximum objective, and in the second case, the FX line is assumed to have an ICL of 8 dB. Typical noise and loss values for various metropolitan network connections are given in Figure 13-7(b). The connections include up to four links comprising two tandem trunks and two intertandem trunks. The percentages for good or better and poor or worse grade-of-service ratings were determined for left to right transmission by the use of a computer program. The grade of service for transmission in the opposite direction might be slightly different due to differences in station set efficiencies and noise effects.

Figure 13-7(b) shows that the grade of service improves somewhat on short intrabuilding connections when the FX line loss is 8 dB. This improvement (1.7 percent increase in good or better and 0.6 percent decrease in poor or worse ratings) is due to fewer observations of "too loud" on these short connections. All other configurations show significant deterioration in the grade of service due primarily to the added overall loss. The differences in noise for the two cases are only a few tenths dB.

Similar effects occur when several special services circuits are used in a built-up connection. If ICL objectives for the special services circuits are exceeded, the grade of service for such built-up connections deteriorates rapidly with relatively small increases in ICLs.

Return Loss

Objectives have been established for return losses to control echo and to provide singing margin in special services circuits for reasons similar to those that apply to ordinary telephone service applications. The concern here is primarily for terminal balance with those special services circuits, such as WATS lines and trunks and LD trunks, which terminate in a toll central office. Return loss measurements are made from the toll office with the station end of the circuit terminated in an off-hook station set or 600 ohms. The objective is a median echo return loss of 15 dB, a minimum of 9 dB, and an immediate action limit of 6 dB. Singing return loss objectives are a median value of 10 dB, a minimum of 6 dB, and an immediate action limit of 4 dB.

All special services circuits that use gain devices must have adequate margins to avoid singing or near singing conditions. These circuits must be stable in the idle condition as well as in the talking

condition. Idle condition stability can be controlled by limiting repeater gains, by use of repeater disablers, or by use of idle circuit terminations. In the idle condition, only enough singing margin is required to satisfy impedance changes due to seasonal temperature variations.

Some difficulty may be encountered in meeting both gain and idle circuit singing margin requirements in a circuit without repeater control but which uses a DLL unit. Since the DLL unit repeats an idle or open circuit condition, it presents a 0-dB return loss and the allowable gain of the repeater is severely limited if the repeater is not properly located. Figure 13-2 shows desirable relative locations of DLL units and repeaters. However, with any design, a check of both signalling and stability requirements must be made. Extreme cases may require a new interoffice facility of coarser gauge wire pairs to eliminate the need for a DLL unit, the use of four-wire facilities to obtain greater gain and singing control, or the use of a repeater disabler.

For an established connection, a computed singing margin of at least 10 dB is a reasonable minimum to allow for expected differences between the computed and actual results, to allow for variations from assumed line conditions, and to avoid near singing.

Noise

Circuit order requirements, maintenance limits, and immediate action limits for noise are given in Figure 13-8 for circuits that have one or more links of voice-frequency or carrier trunk plant facilities. Where the circuits are derived from loop plant facilities, the circuit order requirement and maintenance limit is 20 dBrnc and the immediate action limit is 36 dBrnc. The noise limits apply at the station for WATS, off-premises extension, secretarial, and on-premises and off-premises station lines. The limits apply at the PBX for PBX-CO, WATS, and ACD trunks. Circuit order requirements specify the maximum acceptable noise when the circuit is initially placed in service. Maintenance limits have the same values as circuit order requirements and specify the maximum acceptable noise when measured routinely or in response to a trouble report.

A circuit with measured noise less than the circuit order or maintenance limit does not require maintenance; where noise exceeds the limit, the circuit can be placed in service or can be allowed to remain

	NONCOMPANDORED		COMPANDORED	
ROUTE MILEAGE	MAINTENANCE LIMIT,* dBrnc	IMMEDIATE ACTION LIMIT, dBrnc	MAINTENANCE LIMIT,* dBrnc	IMMEDIATE ACTION LIMIT, dBrnc
0-15	28	36	23	30
16-50	28	36	23	30
51-100	29	36	24	30
101-200	31	36	26	30
201-400	33	40	28	34
401-1000	35	40	30	34
1001-1500	36	40	31	34
1501-2500	39	44	34	40
2501-4000	41	46	36	40

*Circuit order requirement has same value.

Figure 13-8. Station noise limits for switched special services circuits on trunk plant facilities.

in service only if remedial action is taken. Under no circumstances should a circuit whose noise exceeds the immediate action limit be allowed to remain in service.

Telephone Set Current

Transmission objectives, expressed in terms of 1-kHz losses, are based on an optimum station set current of approximately 50 milliamperes. Currents smaller than this provide less output from the transmitter while larger currents reduce the efficiency of the receiver. The 500-type telephone set is equipped with a network which automatically adjusts the efficiency of the set according to the amount of the current flowing in the loop. The output power of the tone signal generator in a TOUCH-TONE telephone set is an inverse function of the loop current; i.e., the minimum generator output occurs with maximum loop current.

The battery supply may be located at any of several points in the circuit depending on the type and location of the equipment used. When transmitter battery is supplied from the normal serving central office there is generally no problem in maintaining satisfactory loop current. However, the location of DLL equipment must be considered from a loop current standpoint as well as from supervision aspects.

The location of the DLL unit and the battery voltage (48V or 72V) should be chosen so that the current fed to the station set is in the range of 36 to 65 mA and in no case should the current be less than about 23 mA.

Bridge Lifters

Where a special service is provided by bridging one circuit on another, the transmission performance may be seriously degraded by the effect of the parallel impedance. The degradation is avoided by using bridge lifters at the bridging point. The two special service lines that are particularly affected are secretarial service lines and off-premises extension lines.

A bridge lifter is used on the main station line to improve transmission on the special service line when the sum of the lengths of the main station line and any bridged taps on the main station line and the special service line exceeds 6000 feet of nonloaded pairs or when the main station line or the special service line is loaded. Similarly, a bridge lifter is used on the special service line when the sum of the lengths of the special service line and any bridged taps on the two lines exceeds 6000 feet of nonloaded pairs or when the special service line or the main station line is loaded.

13-4 DATA TRANSMISSION CONSIDERATIONS

The voice-frequency facilities of the switched public network are used to transmit a variety of data signals. Voice-frequency data services are classified according to the signalling rate of the transmitted data signals. The classifications and rates are: type I, signals transmitted at rates below 300 bits per second; type II, signals transmitted at rates between 300 and 2400 bits per second; and type III, signals transmitted at rates in excess of 2400 bits per second. The type II classification is also applied to voice-frequency analog data signals.

Data service may be furnished on an end-to-end basis wherein all facilities are furnished by the telephone company. This is called DATA-PHONE service and the equipment and facilities are so designated (for example DATA-PHONE data sets and DATA-PHONE loops). In some cases, the terminal equipment and data sets are provided by the customer and connections are made to the message network through data access arrangements (DAA).

A unique problem sometimes arises when automatic calling (unattended dialing) is a required feature. This type of service must be provided by a central office that has automatic number identification and automatic message accounting capabilities. If the normal serving office cannot meet these requirements, the service must be provided over a line to a suitable remote office. Such service, called remote exchange (RX) service, may be furnished so that specific data transmission capability may be provided by a remote office when the normal serving office lacks that capability.

Transmission Objectives

Facilities used for data signal transmission must meet data signal transmission objectives in addition to speech signal transmission objectives. These objectives are covered in terms of specific types of circuits and general applications.

Circuit Applications. Parameters which must be considered in the transmission of data signals at rates of 300 bps and higher have little or no effect on signals transmitted at rates under 300 bps. For this reason, two DATA-PHONE loop designs are recommended. The major differences are that no attenuation/frequency distortion or envelope delay distortion (EDD) requirements are imposed on local loops for type I service. Loop transmission objectives for types I, II, and III DATA-PHONE or DAA services are summarized in Figure 13-9(a).

Transmission objectives for RX, FX, and WATS lines are summarized in Figure 13-9(b). The distortion objectives of toll connecting trunks are allocated to RX and WATS lines on the premise that a central office adjacent to the toll switching center can be chosen as a serving office and the distortions of a toll connecting trunk can be ignored because they are insignificant. The objectives would then apply to the line from the data station to the serving office. However, this is true only where the described relationship between the serving office and the toll switching center exists. If the serving office must be at a distance from the toll switching center, the distortions of the toll connecting trunk must be included in the objectives for RX and WATS lines given in Figure 13-9(b). In such cases, the impairment of various types of facilities encountered in toll connecting trunks must be added to the loop impairments to verify that the connection from the station to the toll switching office is within limits.

PARAMETERS	TYPE I SERVICES	TYPES II AND III SERVICES
1000-Hz insertion loss	9.0 dB	9.0 dB
Envelope delay distortion (1000 to 2400 Hz)	Not specified	100 μs
Signal power at office (at MDF)	−12.0 dBm (max.)	−12.0 dBm (max.)
Impulse noise	Not specified	Not more than 15 counts in 15 minutes at a threshold of 59 dBrnc0 on carrier facilities or 50 dBrnc0 on VF facilities.
Message circuit noise	Voice message requirements	

(a) Local loop limits.

PARAMETERS	TYPE I SERVICES		
	RX, WATS LINES TO CLASS 5 OFFICES	RX, WATS LINES TO CLASS 4 OFFICES OR EQUIVALENT	FX LINES
1000-Hz insertion loss	9.0 dB	9.0 dB	8.5 dB
Envelope delay distortion	Not specified	Not specified	Not specified
Impulse noise	Not specified	Not specified	Not specified
	TYPES II AND III SERVICES		
1000-Hz insertion loss	9.0 dB		8.5 dB
Harmonic distortion* Second harmonic Third harmonic	30 dB 36 dB		28 dB 33 dB
Envelope delay distortion (1000 to 2400 Hz)	300 μs		600 μs
Impulse noise	15 counts in 15 minutes at a threshold of 68 dBrnc0		

*Harmonic ratios to 700 Hz fundamental: Type III data sets only.

(b) RX, FX, and WATS line limits.

Figure 13-9. DATA-PHONE and DAA transmission limits.

The performance of FX lines is approximated by including the distortions of a toll connecting trunk and one or two intertoll trunks with those of the local loop. By subtracting the results from the long-haul contribution, the remaining distortion (which is approximately equivalent to that of a short toll circuit) is such that the overall transmission objectives for DATA-PHONE service can be met on calls terminating within a radius of 200 miles of the FX serving office. Performance cannot be specified beyond this distance.

General Applications. Attenuation/frequency distortion (slope) is the dB difference in circuit attenuation at two specified frequencies. In DATA-PHONE circuit design, the slope is measured between 1000 and 2800 Hz. Types II and III DATA-PHONE data sets are designed to compensate for average amounts of slope by means of built-in equalization. The AML at 1000 and 2800 Hz should be recorded for each loop on which types II and III data sets are used and for all FX, RX, and WATS lines regardless of the data set used. The AML should be within 1.0 dB of the EML at 1000 Hz and within 2.0 dB of the EML at 2800 Hz. The 3-dB slope transmission objective applies regardless of the difference between the EML and the AML. Attenuation/frequency distortion objectives for types I, II, and III data services are given in Figure 13-10.

Envelope delay distortion can cause serious impairment of data signals. An EDD objective is not specified for type I data service loops but types II and III data service loops must meet the objective given in Figure 13-9(a). Objectives for FX, RX, and WATS lines are given in Figure 13-9(b). All DATA-PHONE data sets are designed to tolerate some EDD. In addition, some sets have built-in compromise equalizers which may be used optionally to compensate

CIRCUIT TYPE	TYPE I SERVICES	TYPES II AND III SERVICES
Local loops	Not specified	3.0 dB
RX and WATS lines to class 5 offices	7.0 dB	5.0 dB
RX and WATS lines to class 4 offices	8.0 dB	5.0 dB
FX lines	8.0 dB	6.0 dB

Figure 13-10. DATA-PHONE and DAA slope objectives.

for EDD. Since the loop may consist of loaded and/or nonloaded cable pairs, open wires, or carrier facilities, the amount of EDD varies. If the EDD exceeds the objectives, additional equalization is required. Where the objectives cannot be met, error rate tests may be made to a distant test center to determine whether service is satisfactory.

Data signals are especially susceptible to impulse noise, particularly at the data station where received data signals are at their lowest amplitudes. Thus, impulse noise measurements are made at the receiving terminals of the data set; this procedure usually ensures that impuse noise from all sources is included in the measurement. Within a central office, each path through the switching machine may exhibit a different number of impulse noise counts at the specified threshold. If the contribution of the loop facilities is assumed to be constant, the variation in counts registered during 15-minute measurement intervals depends on the intraoffice path of the connection. If the specified objective is barely met, it may be expected that the limit is being exceeded in a large percentage of the calls through the office. In marginal cases, it is recommended that four 5-minute measurements be made and if three of the four measurements register five counts or less at the specified threshold, the circuit can be accepted. If the impulse noise objective is exceeded and the condition cannot be corrected, an RX line must be provided to another office.

DATA-PHONE data sets are designed to tolerate echoes that are at least 12 dB below the minimum received signal power. Since echo requirements can usually be met without special loop treatment, no specific return loss measurements are required on DATA-PHONE loops. If trouble is indicated by a constantly high error rate, measurements are necessary. Such troubles can usually be attributed to impedance irregularities in trunk circuits, poorly balanced terminating sets, or improperly adjusted loop repeaters. If E-type repeaters are used, transmission stability must be considered.

Design Considerations

Special services loops and lines that are intended to transmit data signals must be designed according to criteria that are somewhat different from those applied to ordinary telephone circuits. The related parameters of loss, signal power, and transmission level points (TLPs) must be carefully considered.

Loops. A DATA-PHONE loop consists of all facilities and line equipment between the connecting block at the customer premises and the side of the main distributing frame that is wired to the switch at the serving central office as illustrated in Figure 13-11. In most cases, the loop is composed of cable pairs but carrier facilities are sometimes used. In any case, the loop loss should not exceed 9.0 dB.

Connection of customer-provided terminal equipment is made through a protective connecting arrangement (coupler) which increases the insertion loss of the DAA by up to 2 dB. The coupler limits the maximum power (averaged over a 3-second interval) applied to the loop.

The average signal power measured at the central office must not exceed —12 dBm in order to avoid overloading carrier and radio facilities. The TLP at the outgoing switch of a class 4 office is —2 dB. Since the loss of a toll connecting trunk is approximately 3 dB, the

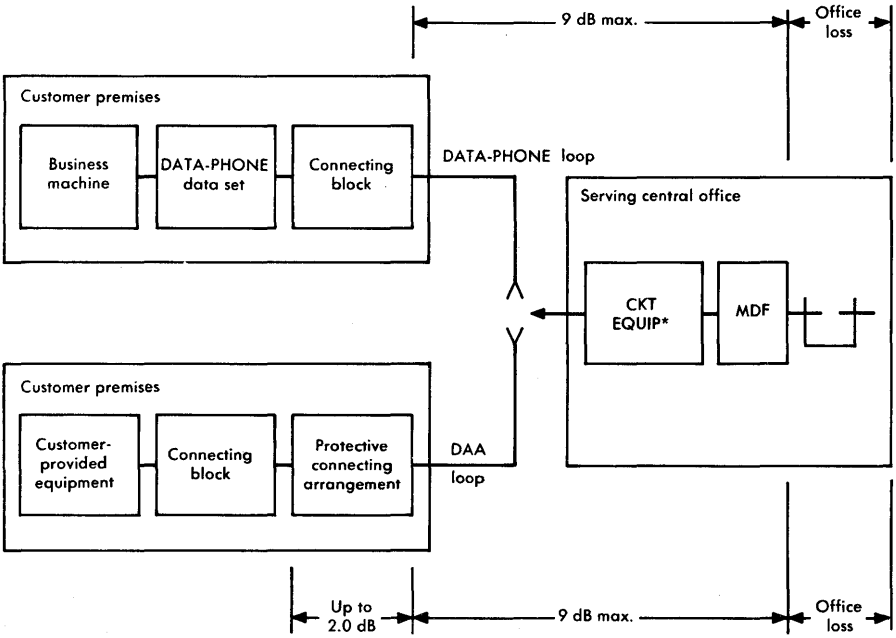

* Circuit equipment not always required.

Figure 13-11. Loop designs for data transmission.

serving class 5 office can be thought of as a +1 dB TLP with respect to broadband carrier facilities at the class 4 offices. Therefore, the data signal power is —13 dBm0 on the carrier channel. Only DATA-PHONE data sets capable of being adjusted to meet this requirement should be used.

The type of switching equipment in the serving central office is a consideration in the design of DATA-PHONE loops. Panel-type and step-by-step switching equipment are often not acceptable because of excessive impulse noise. Although these types of equipment may be acceptable in some cases for type I data service, an evaluation should be made. If the normal serving office is unsuitable, as indicated by transmission measurements, an RX line must be provided.

Lines. Line facilities for FX, RX, and WATS lines are often composed entirely of voice-frequency components as illustrated in Figure 13-12. The parts of these circuits indicated as being related to transmission objectives must meet the objectives given in Figure 13-9(b).

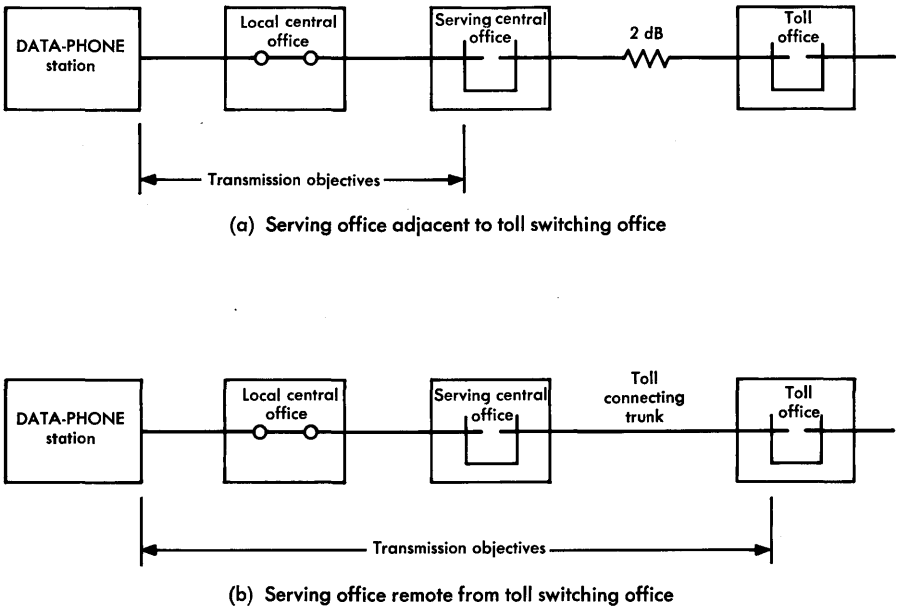

Figure 13-12. Voice-frequency FX, RX, or WATS line designs for data transmission.

When carrier facilities are included in an FX, RX, or WATS line for DATA-PHONE service, an arrangement such as that shown in Figure 13-13 is used. In the transmitting direction, the design places the data station at a +5 dB TLP which is consistent with the TLP of private lines. This design results in a 21-dB loss in the transmitting direction from the data station to the —16 dB TLP at the carrier channel input. The data signal power at the —16 dB TLP is —29 dBm which means that the data signal power transmitted at the data station is adjusted to —8 dBm (or to the next lower power setting on step-adjustable data sets). This represents a fixed-loss design of 4 dB between the station set and the serving central office. An office loss of 0.5 dB is assumed. Actual office losses may differ somewhat from this value but the net loss should not be less than the design objective so that adequate return loss and singing margins are provided. The net losses must be equal in the two directions of transmission. The example shown in Figure 13-13 represents a short RX, FX, or WATS line terminating in a class 5 office. In cases where the line is to terminate in a class 4 office, the office TLP is —2 dB and the design loss is a fixed 7 dB.

In Figure 13-13, the 21-dB loss from the data station to the carrier channel input consists of the T pad (14 dB), the hybrid loss (4 dB), and the loss of the two-wire nonloaded cable link (3 dB). These losses are assumed for the purpose of illustrating the design. The value of the T pad is determined by the cable loss but it should be noted that there is a practical upper limit to the loss that can be used in the two-wire local loop since singing margin must be protected in the carrier link by some minimum loss in the T pad. The singing margin is dependent on the loss across the hybrid which, in turn, depends on the degree of balance obtained. A compromise design is assumed in the illustration. The loss across the hybrid should be sufficient for loops having losses close to the value shown. Losses of longer loops can be tolerated since such loops are usually loaded and the use of a precision network accomplishes a better degree of balance and consequently a higher transhybrid loss. The design illustrated meets terminal balance objectives. The four-wire portion of the line may be extended to the station set, if necessary, to meet the singing margin requirement. While the data station TLP of +5 dB sacrifices 5 dB in terms of signal-to-noise ratio for voice transmission, the design represents a compromise favoring data operation.

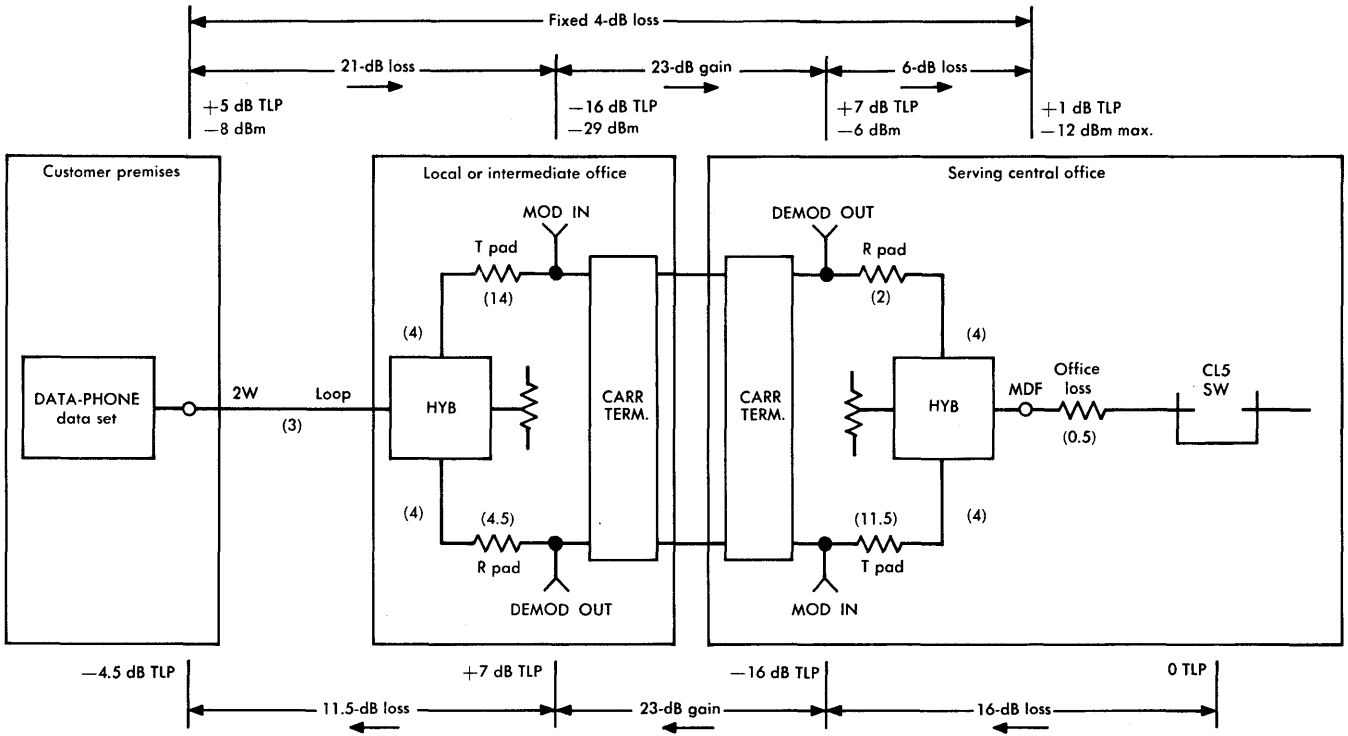

Note: Values in ( ) are assumed losses.

Figure 13-13. Carrier facility design of FX, RX, or WATS line for data transmission to a class 5 office.

Cable Facility Treatment

In order to meet data transmission requirements, it is sometimes necessary to improve loop transmission characteristics. Normally, nonloaded loops up to 9 kilofeet in length meet requirements without additional treatment. However, nonloaded loops longer than 9 kilofeet have excessive slope which must be corrected. Loaded loops with end sections longer than 9 kilofeet also have excessive slope; those having more than three loading coils have excessive envelope delay distortion.

Transformers (repeating coils) may be used as equalizers at the serving central office to improve the slope characteristic of nonloaded loops 9 to 12 kilofeet long. Where such treatment is used, a bypass arrangement (dial long line unit) is required at the office to permit loop supervision and signalling. Such treatment may be more economical than building out a loop to 12 kilofeet and providing the necessary loading.

The slope characteristic of nonloaded cable pair loops can be improved by the use of E-type repeaters equipped with appropriate networks, as illustrated in Figure 13-14. The curves were derived from measurements of 26-gauge cable pairs terminated in 900 ohms. One

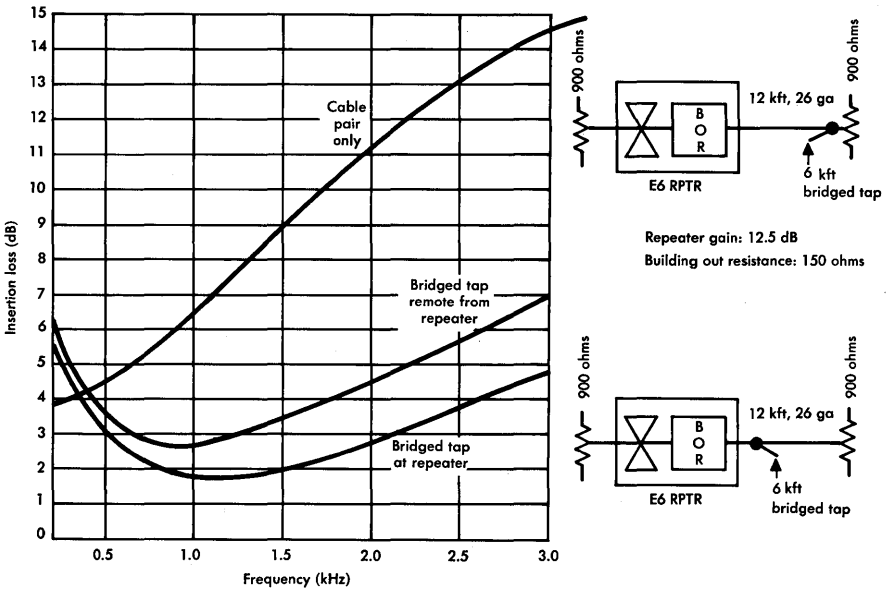

Figure 13-14. Slope improvement on 26-gauge nonloaded cable.

curve shows the slope characteristic of the cable alone while the other two curves show the slope improvement resulting from the use of E-type repeaters. The use of an E-type repeater may lead to excessive envelope delay distortion of a loop; however, a compensating network is available for use with E-type repeaters to improve the delay characteristics.

An E-type repeater equipped with appropriate networks can be used to correct the slope characteristics of nonloaded 26-gauge loops up to 14 kilofeet long, 24-gauge loops up to 17 kilofeet long, 22-gauge loops up to 22 kilofeet long, or an equivalent combination of lengths. An equivalent combination of gauge lengths would be one where the sum of the fractional parts (the actual length used divided by total length permitted for each gauge) totals unity.

If the slope and envelope delay requirements cannot be met by the above methods, a trouble condition requiring corrective action may be indicated. Loading coils may be incorrectly spaced or there may be an excessive number of load points (more than three). The end section of a loaded line may be excessive (more than nine kilofeet long). Finally, there may be one or more bridged taps that can be removed to improve the loop characteristics. While two-wire design is usually the more economical, four-wire design combined with V-type repeaters with appropriate equalizers may have to be used if slope and delay requirements cannot otherwise be met.

PBX Considerations

Because of higher impulse noise, error rate performance in DATA-PHONE circuits that have dial access to the switched message network through a PBX is generally poorer than that on direct loops to the central office. Where a choice exists, a direct loop is recommended, especially for types II and III services. If a direct loop is not provided, any treatment necessary to meet DATA-PHONE transmission objectives must be applied to all PBX-CO trunks over which the service may be routed. This means that all PBX-CO trunks must be built out to have the same loss and the data station TLP must be adjusted for this loss. The line distortion between the PBX and the station is assumed to be negligible for on-premises stations. The transmitted data signal amplitude limitations must be maintained at the serving central office for all trunks involved. Slope equalization may be required on long PBX-CO trunks used for types II and III services.

Arrangements which permit alternate use of the switched message network with a special service circuit (such as a PBX tie trunk) require special consideration. The DATA-PHONE signal power requirements must be met for satisfactory performance on the switched message network but, unless compensated for, the data signal power may be too high on the special service circuit. The difference in power occurs because the PBX switch is considered to be a +4 dB TLP for DDD access but is considered to be a 0 TLP for FX, RX, and WATS trunks. The 4-dB difference could be compensated for by a variety of techniques depending on economics and local company design. Centrex service with a switchboard attendant position may present special problems, especially when the centrex central office is remotely located. The difficulty arises from the fact that signals may be transmitted between the customer location and the central office three times on a call (data station to central office to switchboard to central office).

If unattended operation of the data set is desired, difficulties can also be encountered in the operation of a data set connected over a station line to a manual PBX or where a dial long line circuit is provided. Most modern data sets, when operated in the unattended answer mode, are dependent on the dc line current present while superimposed ringing occurs for answer supervision and ring tripping. In some older PBXs, incoming ringing current on a trunk causes the PBX to supply the PBX station with ringing current from a ringing generator. This type of generator does not supply direct current during the ringing interval. Without direct current, there can be no ring tripping or holding relay operation in the data set. As a result, the data set disconnects before battery can be placed on the line.

Although the timing sequence of the ring tripping operation of a manual PBX is such that it should perform satisfactorily with unattended data sets, other difficulties may be encountered. For example, if the data set attendant requests the PBX operator to establish a connection to another data station and then call back the originator, both the called and calling stations are in the answer mode. Such operation results in incompatibilities in data sets having answer-back sequences. Also, if the PBX attendant inadvertently operates a talk key associated with the connection during the transmission of data, errors result and the connection may be lost. If PBX data stations must be provided, they should be attended stations with special in-

structions for establishing and maintaining connections. These recommendations apply to both DATA-PHONE and DAA installations.

DATA-PHONE service to off-premises stations is discouraged. Satisfactory error rate performance cannot be assured because DATA-PHONE loop design applies to trunks between the PBX and the serving central office but not to the facilities and circuits serving the off-premises station. Operation of type I data sets and customer-provided equipment operating at similar bit rates may be satisfactory but cannot be assured.

Chapter 14

Centrex

Private branch exchanges (PBXs) have served the diverse communications needs of business customers for many years. They were originally conceived as small, self-contained switching systems designed to serve situations in which most calls were internal. That concept is still valid for some installations. However, the complex operations of many modern businesses pose traffic problems that challenge the traditional role of the PBX.

The need to alter PBX switching system design was indicated when direct distance dialing (DDD) was introduced. The extension of DDD service to PBX stations made possible much faster and more efficient calling to points outside the PBX, leading to the introduction of an improved service, called centrex (CTX), to provide direct inward and outward dialing. In addition to offering the service features required by a large complex business, centrex gives PBX customers message network service that is comparable to individual line service in speed, flexibility, and efficiency.

14-1 CENTREX FEATURES AND ARRANGEMENTS

Each centrex installation must meet the service demands for which it is designed and engineered. These demands are satisfied by flexible service offerings derived by providing features in basic equipment arrangements. In addition, many optional features are available. Equipment arrangements can be provided either at the customer premises or at a central office.

Service Features

Each centrex package of services includes the basic features associated with PBX services. The attendant position is a console or switchboard where incoming calls to the listed directory number or calls requiring attendant assistance are answered and completed.

The following are illustrative of basic centrex features. *Direct outward dialing* (DOD) offers direct access to the network without attendant assistance. *Station-to-station calling* permits the station user to dial a desired PBX station without attendant assistance. A *station hunting* feature directs calls to a pre-arranged alternate station when the called station is busy. *Station restriction* denies the ability of specific stations to place outgoing calls and certain miscellaneous trunk calls without assistance from the attendant. *Call transfer—attendant* enables the called party, while connected to the incoming line, to signal the attendant and have the call transferred to another station within the PBX system. Upon loss of power, *power failure transfer* automatically enables outgoing service to the message network for a limited number of pre-arranged stations and, in some cases, incoming service can also be provided. *Night service* permits calls to be directed to a PBX station in the absence of the attendant.

In addition to such basic features, centrex provides *direct inward dialing* (DID) to permit calls from the message network to reach the called station without attendant assistance. *Automatic identified outward dialing* (AIOD) identifies the calling station on outgoing toll calls for billing purposes.

Centrex can include several additional features. *Call transfer—individual* permits a station user to transfer an incoming call to another station within the PBX system without assistance from the attendant. *Add on* enables a station user to add another station within the PBX to an existing incoming call, thereby establishing a three-party conference. *Consultation hold* allows a station user to hold an incoming call and originate, on the same line, a call to another station within the PBX. After consultation, the user may add the third party to the original call or return alone to the original call if the third party hangs up. The *trunk answer any station* feature permits any station user, by dialing a special code, to answer incoming listed directory number calls when the attendant position is on night service.

Additional and specialized optional features are available for centrex service. Foreign exchange (FX) service, wide area telecom-

munications service (WATS), and tie trunk services can be provided to connect the centrex switching machine with the message or private networks. TOUCH-TONE calling and toll diversion can be provided. Conference calling permits a station user to establish a conference connection of up to six conferees without attendant assistance.

Some optional features can be provided only by the versatile electronic switching systems. *Speed calling* allows the station user to originate a call by dialing fewer digits than are normally required. *Three-way calling* allows the station user to add another station within the same PBX or centrex system to either an incoming or outgoing call for a three-party conference without attendant assistance. *Call forwarding* enables the station user to have all calls rerouted automatically to an alternate station within the PBX. *Call forwarding—busy line* permits all incoming calls to a busy station to be routed automatically to the attendant. *Call forwarding—don't answer* permits all incoming calls to a station that doesn't answer within a prescribed time to be routed automatically to the attendant.

Other optional features provide interface facilities for customer-owned equipment. *Paging* allows attendants and station users to connect to and page over customer-owned loudspeaker equipment by dialing a special code. *Recorded telephone dictation* permits access to and control of customer-owned telephone dictating equipment. The dictating equipment may be controlled either by voice or dial. *Code call* permits attendants and station users to activate customer-owned signalling equipment by dialing a special code. The called party can then be connected to the calling party by dialing another special code.

Equipment Arrangements

Centrex service is available in two equipment arrangements. In one arrangement, service is provided by switching equipment located in a central office. The switching equipment is usually No. 5 crossbar, No. 1 ESS, or No. 2 ESS although step-by-step equipment is used in some cases. Each centrex station is served by a direct line to the central office. Attendant facilities at the customer premises may consist of a console or a switchboard. A switching machine may provide only centrex service or it may provide both centrex and ordinary telephone service. The switching machine normally is treated as a class 5 office in the message network. Where a portion of a centrex machine switches tandem or intertandem tie trunks, terminal or through balancing is required.

In some centrex arrangements, both switching equipment and attendant facilities are located on customer premises. When used for centrex service, the transmission characteristics of a PBX and its connecting circuits are similar to those used for normal PBX service.

Since the inception of centrex service, many improvements in technique and capability have been incorporated into switching machine hardware and software. As a result, there are several vintages of equipment and program arrangements. Thus, it is necessary to verify that the features under consideration for a given application can be provided by available equipment.

14-2 CENTREX TRANSMISSION CONSIDERATIONS

Most centrex customers are large toll users and, in many cases, the centrex is part of a switched services or tandem tie trunk network. In addition, centrex stations may have requirements for special features such as conferencing and add on. To provide a satisfactory grade of service, transmission losses must be maintained near objective values.

Station Lines

Centrex station lines are similar to ordinary loops. In view of the previously mentioned service features, the maximum 1000-Hz loss of a centrex station line is 5.0 dB, well below the maximum for an ordinary loop. The resistance limit is 1300 ohms. Where a centrex station is looped through a switchboard to gain access to the message network, as shown in Figure 14-1, the overall loss from the central office to the station over the three loop facility links in tandem should not exceed 8.0 dB. However, connections of this type are not recommended. Manual switchboards have largely been replaced by operator consoles which use release link access and do not require three connections between the central office and the customer premises.

Attendant Facilities

Attendant facilities for centrex are usually provided by means of consoles. From a transmission standpoint, console operation is superior to switchboard operation. However, some types of operation require switchboard facilities to permit administration by a PBX operator.

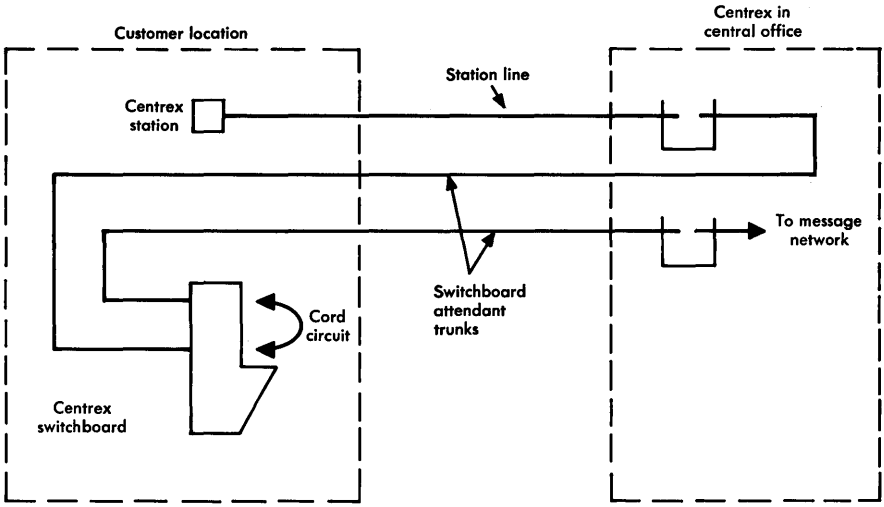

Figure 14-1. Centrex station connection through a switchboard to the message network.

Consoles. As previously mentioned, attendant service with consoles is provided on a released link basis. This means that calls are switched to the console for attendant assistance; such calls can be automatically released from the console when assistance is no longer required. The signals and controls on the console are such that the attendant can either monitor the associated connection or split it and talk to either party privately as if the circuit were looped through the console for direct control of its continuity.

The console attendant completes calls requiring assistance (for example, dial 0, listed number, or transfer) by dialing back through the centrex machine. When the called party answers, the attendant normally disconnects leaving the through connection unbridged by the console circuit. However, the attendant has two other options. First, the call can be monitored to see that it is properly completed and then released. Second, the call may be held after completing the connection, thus permitting the attendant to handle other calls and still monitor the held call at intervals. The attendant facilities are bridged on the through connection only while monitoring. Console arrangements are provided on a two-wire basis for No. 5 crossbar centrex. A two-wire transistor amplifier bridge is associated with each position and position loop circuit. However, for transmission reasons,

some earlier versions of No. 5 crossbar centrex must utilize four-wire console and attendant trunk arrangements. Both two- and four-wire consoles are available for use with No. 1 ESS. The four-wire consoles provide better transmission performance and should be used for centrex operation in tie trunk networks or centralized attendant operations. Two-wire consoles may otherwise be used but care must be exercised to control the impedance of the operator loop at the switch to allow use of a negative impedance converter in the three-way conference bridge used to provide operator access to customer connections.

When the console circuit is bridged to the through connection, volume and return loss are affected negligibly. The attendant loop circuit and negative impedance converter, shown in Figure 14-2, permit the bridging to be done on a high-impedance basis and provide some gain in the transmission path to the console. The balancing network and termination are adjustable to provide adequate return loss at the hybrid.

Split access is also provided for console connections to both directions of the through path. In this circuit, a three-way conference bridge is used in the attendant loop circuit to permit access to either or both directions of transmission.

The proper attendant transmitting and receiving volumes are obtained by use of amplifiers the gains of which are set to provide average transmitting volumes at the centrex switches equivalent to those that would be received from a 500-type telephone set at the same location as the console. Average received volumes at the console are maintained at preferred values regardless of loop loss.

The gain settings are also based on considerations of sidetone at the console. The sidetone is dependent on the transhybrid loss between four-wire legs of the hybrid, the amplifier gains, and the attendant trunk loss. In most cases, preferred values of sidetone are achieved under working conditions. High sidetone may occur in some cases due to the excessive lengths of office cabling between the hybrid and the output transformer. In these cases, installation and adjustment of an external network building-out capacitor may be required. When the circuit is idle, stability and sidetone controls are maintained in the console circuit by an idle circuit termination.

Switchboards. Fully satisfactory transmission cannot be expected where calls are connected through a switchboard by means of cord

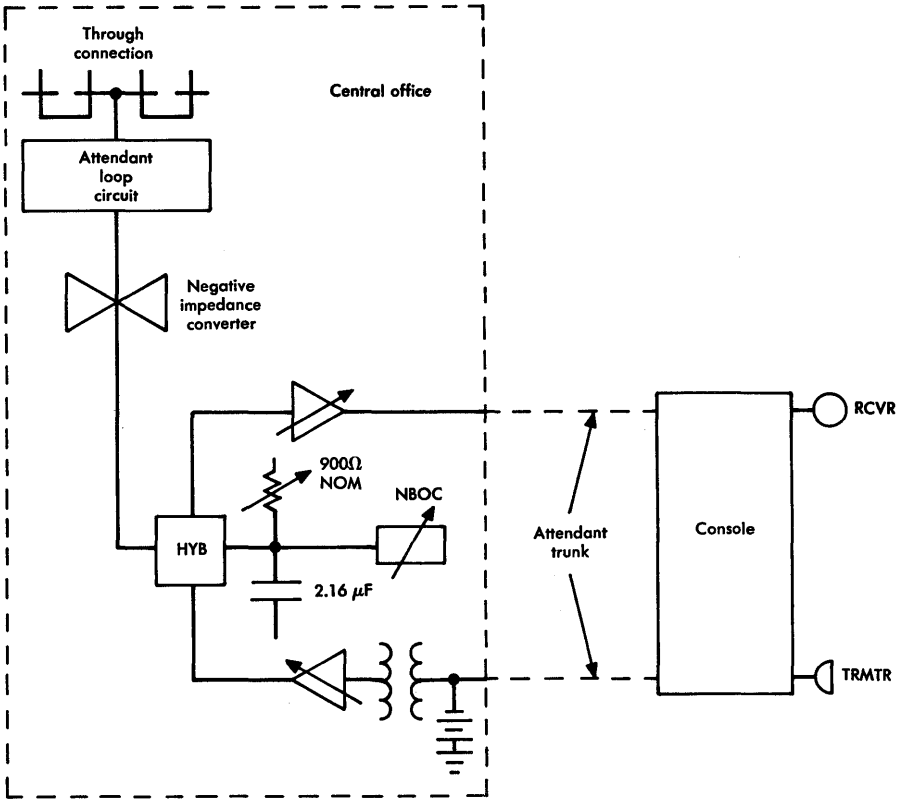

Figure 14-2. Console bridging to through connection.

circuits as it is with released link operation. The type of switchboard sometimes used with centrex provides for single cord (released link) operation, similar to the released link operation described for consoles, only on listed number calls to centrex stations and on centrex station transfer calls. Other calls, such as dial 0 and listed number calls to be connected to tie trunks which involve attendant assistance, must remain looped through the switchboard. Consequently, these calls may involve two or three links between the switching machine and the customer location. An attendant-assisted call from a centrex station to the message network involves one station line and two attendant trunks as shown in Figure 14-1. This type of operation results in excessive transmission loss, degraded return loss on tie trunk or access

line connections, limitations on the allowable resistance of centrex station lines, low transmitter current at the station, and contrast between calls dialed directly through the centrex machine and those connected through the switchboard. For these reasons, this type of operation is no longer recommended.

Other circuit and equipment configurations depend on the type of call. An incoming dial 0 call from a distant PBX over an attendant trunk for completion to an outgoing tie trunk results in the arrangement shown in Figure 14-3. The transmission considerations of overall loss and balance in this connection are complicated by the additional losses of the two trunks and associated equipment. Release link trunk operation, now used for most such connections, results in much improved transmission performance.

The transmission contrast between a call dialed directly to the message network and one placed via the switchboard may be large if the switchboard-to-switching machine losses are not kept low. With existing switchboard arrangements, each of the tandem links must

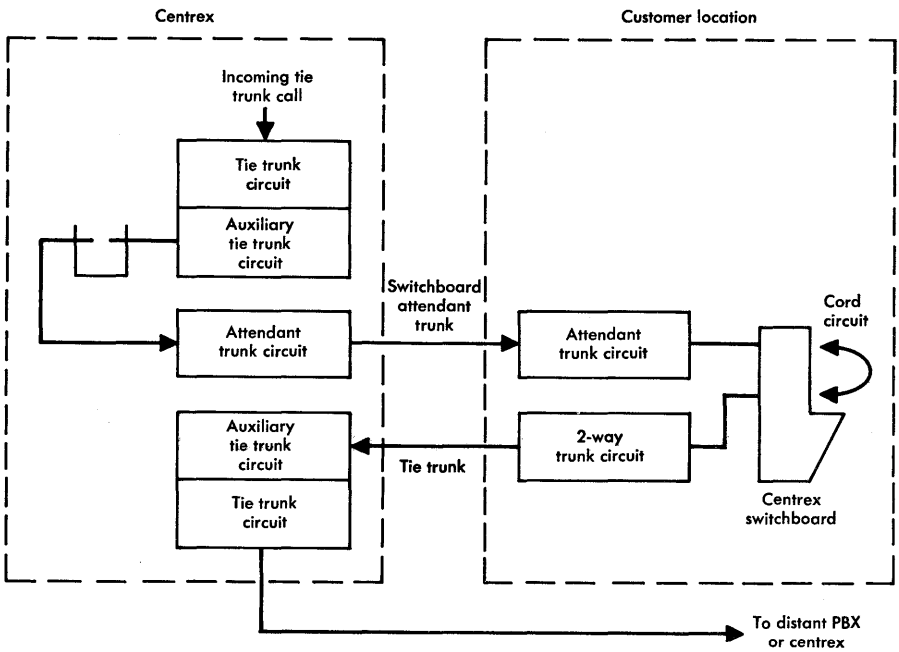

Figure 14-3. Centrex-CO switchboard tie trunk connection.

meet a 1000-Hz loss objective of 2.5 dB. This may be accomplished by use of four-wire facilities, loaded facilities, or two-wire repeaters. The effect of the switchboard paths on return loss must also be considered on tie trunk or access line connections.

Tie Trunks

Tie trunks may be provided between centrex installations or between a centrex and a PBX. The transmission objectives for centrex tie trunks are the same as those for PBX tie trunks. The inserted connection loss objectives apply between the centrex switching machine termination of the tie trunk and the distant PBX or, in the case of a manual tie trunk, between the switchboard jack appearance and the distant PBX.

As previously mentioned, the maximum loop resistance for a centrex station line is normally 1300 ohms. Where calls are routed to the message network over the station line and two attendant trunks, as shown in Figure 14-1, the sum of the resistances of the tandem circuits must not exceed this maximum. This requirement is necessary in order that adequate signalling and telephone set current can be provided. Dial long line circuits can be used to extend the signalling range but balance may become a problem when the attendant trunks are used for interconnecting long tie trunks.

The pertinent loss and balance objectives, derived from the VNL design plan, are often met for tie trunks by the use of switchable 2-dB pads. Switchable pad operation can be provided at centrex installations for calls handled on a directly dialed basis or by a console attendant. Where switchboard operation is used, switchable pad arrangements may not be available.

Attendant Trunk Circuit Pad Control. The trunk circuit used with an attendant console has two line-link appearances in addition to a trunk-link appearance in a No. 5 crossbar machine. Each line-link appearance has a different class-of-service rating. On dial 0 calls into the attendant trunk circuit, the class of service of the calling party determines which of the line-link appearances is used to extend the call.

If the transmission loss of the path to the attendant trunk circuit is VNL + 2 dB, the call is extended on the attendant trunk line-link appearance that is not equipped with a 2-dB pad. If the loss of the

transmission path on the originating end of the attendant trunk is VNL, the call is extended on the attendant trunk line-link appearance which is equipped with a 2-dB pad resulting in an overall loss of VNL + 4 dB.

Intraoffice Trunk Circuit with Pad Control. The operation of intraoffice trunk circuit switchable pads is controlled by the types of circuits (centrex station line or tie trunk) connected to the originating and terminating ends of the intraoffice trunk. The type of circuit is known from the class-of-service indications at the originating and terminating ends of the intraoffice trunk and the switchable pad is controlled by a logic arrangement in the intraoffice trunk circuit. For example, if a connection is being made to a centrex station from a tie trunk that is designed to an inserted connection loss of VNL + 2 dB, the intraoffice trunk circuit switches in the 2-dB pad to achieve an overall loss of VNL + 4 dB. The pad switching for various connections is shown in Figure 14-4. Note that the loss between PBX and/or centrex locations is VNL + 4 dB for all except station-to-station intracentrex connections.

CONNECTED CIRCUIT DESIGN LOSS		2-dB PAD	EXAMPLE
ORIGINATING END	TERMINATING END		
Local loop	Local loop	Out	Station — station
Local loop	VNL + 2	In	Station — tie trunk
VNL + 2	Local loop	In	Tie trunk — station
VNL + 2	VNL + 2	Out	Tie trunk — tie trunk

Figure 14-4. Pad switching on intraoffice trunk circuits.

FX and WATS Trunks

Foreign exchange trunks for centrex customers may be terminated on the centrex machine and/or on a switchboard. On a dial basis, a centrex station may gain access to an FX trunk by dialing a three-digit code. Access to the FX trunk via the switchboard may involve multiple loops as previously discussed.

Access to WATS trunks may be provided by direct dialing from a station using a three-digit access code, by attendant dialing, or by manual methods from a switchboard. If the centrex office is equipped

for dial access WATS service, a centrex station line may be connected via a WATS trunk circuit to an outgoing toll connecting trunk between the centrex machine and its toll center. Access to WATS trunks via a switchboard involves multiple loops between the switchboard and the switching machine. Where the centrex office is not equipped for WATS service, a trunk must be provided to the WATS office which should also be the serving toll office to maintain the overall connection loss at VNL + 4 dB.

Conferencing

Two types of conferencing arrangements are available for use with centrex. One permits a station user to dial-originate conference connections. The other provides for conference connections to be established by a console attendant. In either case, provisions are available for conference connections to a maximum of six stations. Standard jack-terminated conference circuits are also available for use at a switchboard.

Add-on service, a form of conferencing, is provided in centrex as an extension of the station dial transfer feature. The bridging loss associated with this arrangement is partially overcome by the use of a four-port bridged circuit with gain.

PBX Transmission Considerations

In general, the transmission considerations which apply to standard PBX services also apply to centrex services. However, some centrex features such as direct inward dialing, conferencing, and attendant facilities are somewhat different. Centrex service provides direct inward dialing from the switched message network to a PBX station. Outgoing calls are completed in the same manner as for a noncentrex PBX.

In some types of older PBX operation, transmitter battery for PBX stations is supplied from the serving central office over the PBX-CO trunk for both incoming and outgoing calls. This means that the transmitting and receiving efficiencies of a 500-type station set vary according to the total resistance from the central office through the PBX to the station in the same manner for incoming and outgoing calls.

With direct inward dialing through a step-by-step PBX providing centrex service, transmitter battery is supplied at the PBX for incoming calls and the equalization of the 500-type set is independent of the PBX-CO trunk resistance; however, no receiving efficiency improvement is realized for on-premises stations. This results in a different received volume and a different grade of service on incoming than on outgoing calls, where battery is supplied from the central office, because of variable PBX-CO trunk length and resistance. To minimize this effect, the loss objectives of PBX-CO trunks are 4.0 dB maximum without gain and 3.5 dB with gain. On-premises station line loss should not exceed 4.0 dB. In the No. 101 ESS, battery is supplied at the PBX for incoming and outgoing calls resulting in the same efficiencies for both.

Nongain conference bridges should not be used with centrex because losses are excessive. In order to accommodate conference connections of up to six stations, gain-type conference bridges must be used.

Attendant facilities for centrex are provided by means of two-wire or four-wire consoles or cord-type switchboards. Such consoles may be equipped with an amplifier to increase the transmitted speech volume. The transmitting and receiving efficiencies of the two-wire console also vary with loop resistance in a manner similar to those of a 500-type telephone set. On short loops, these efficiencies are comparable to those of the 500-type set. For a zero length loop, the console with collocated 400-ohm battery supply is approximately 1 dB less efficient in the transmitting direction than the 500-type set with battery supplied from the central office; the efficiencies are about the same in the receiving direction. For a loop resistance of 1000 ohms, the console is approximately 2.5 dB more efficient in the transmitting direction and about 2 dB less efficient in the receiving direction than the 500-type set.

Chapter 15

Private Switched Networks

Switched special services circuits may be configured into networks so that stations at different locations can be interconnected. Stations served by two PBXs may be interconnected by means of PBX-central office trunks and the public network or, alternatively, tie trunks between the two PBXs may provide a convenient and economical alternative. As customer requirements have grown, private networks of such tie trunks have evolved and are now called tandem tie trunk networks. In these networks, switching is done at a PBX located at the customer premises or at a centrex machine located in a central office.

Another private network arrangement of switched special services involves switching by common control switching machines located on telephone company premises. This arrangement, known as a switched services network, may be organized as a hierarchy similar to that of the switched message network or as a polygrid in which all switching machines have equal class status. The Enhanced Private Switched Communications Service is also organized as a hierarchical network. Only two levels are used to provide this service.

Many of the general features and service capabilities of private switched networks are described briefly in Chapter 12. These descriptions are expanded somewhat in this chapter and network arrangements and transmission designs are also presented in greater detail.

15-1 TANDEM TIE TRUNK NETWORKS

Tie trunk networks can be very small, involving only a few PBXs interconnected by direct tie trunks, or can be extremely complex,

involving a large number of customer locations. As the number of PBXs increases, the economics of trunk provision soon dictate the use of intermediate switching and tandem operation which permit two tie trunks to be connected together at a PBX to form a through connection.

It is important to note that the tandem tie trunk network (TTTN) is a service arrangement and not a complete service offering. The channel facilities for the tie trunks connecting two PBXs are furnished under appropriate interstate or intrastate tariffs. Tie trunk terminal equipment at the PBX is furnished under intrastate tariffs applying to PBX service. Thus, a number of areas or different telephone companies may be involved in the provision of a TTTN.

Network Layout

Figure 15-1 is a network layout diagram for a TTTN showing the interconnection of various locations. The locations are served by PBXs or key telephone sets of various types and are interconnected by several categories of tie trunks. The serving PBX at each location is classified according to the functions performed, i.e., end, tandem, main, and satellite PBXs. For a network as large and complex as that shown, satisfactory operation could be achieved only if most of the PBXs had the capability of cut-through operation to permit automatic interconnection of tie trunks [1].

PBX Classifications. A main PBX or centrex (PBX/CTX) is arranged to connect stations or attendants to the TTTN. Where the PBX/CTX is arranged to interconnect tie trunks, as well as tie trunks and station lines or attendant lines, it is a tandem PBX/CTX. A main or tandem PBX/CTX may switch tie trunks to off-network trunks on a "permissive" basis but transmission performance for off-network connections is not assured.

A PBX having its own listed number and an attendant position or console is commonly referred to as a main PBX. It can connect PBX stations to the public network for both incoming and outgoing calls. A PBX served through the main PBX, having the same listed number but with no attendant position or console, is a satellite PBX. All incoming calls are routed from the main PBX over satellite tie trunks. A satellite PBX is usually located in the same exchange area as its main PBX.

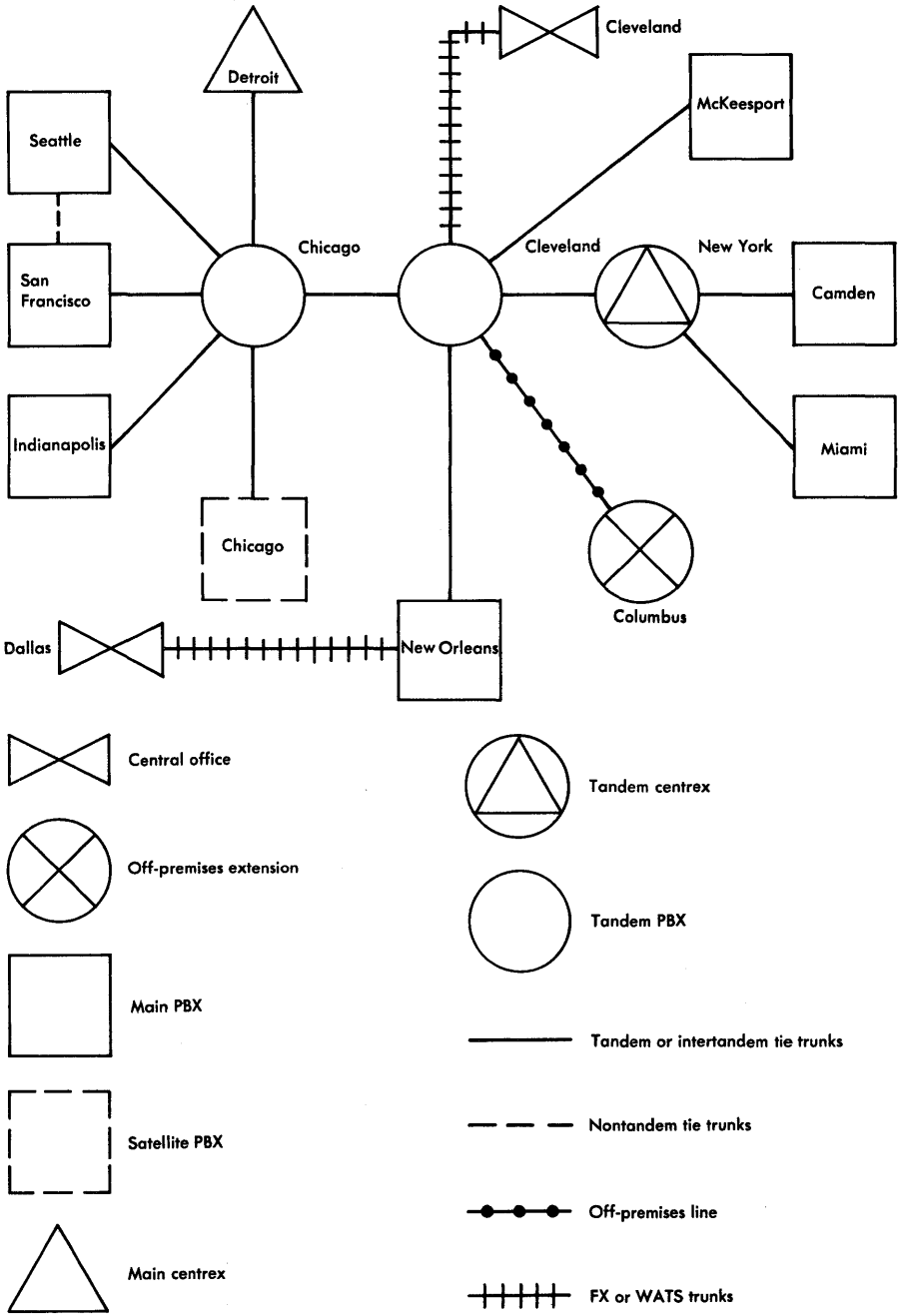

Figure 15-1. A typical tandem tie trunk network.

Trunk Classifications. Trunks which connect a main or satellite PBX/CTX to a tandem PBX/CTX are called tandem tie trunks and tie trunks which interconnect two tandem PBXs/CTXs are called intertandem tie trunks. Trunks which are provided between two PBXs/CTXs without the capability of tandem operation are called nontandem tie trunks. Such trunks are often recommended as an economical arrangement between points having a high volume of traffic. Tie trunks which connect a satellite PBX/CTX to its main PBX/CTX may function as nontandem, tandem, or intertandem tie trunks, depending on the switching arrangements; these trunks must meet the objectives established for the functions performed.

Voice transmission performance and signalling capability are assured on up to a maximum of four tie trunks in tandem. Such assurance is contingent upon the application of the proper interstate and/or intrastate tariff provisions. Voice-grade data at rates in excess of 300 bauds should not be transmitted over more than two tie trunks in tandem.

Connection of a tie trunk with the public network is permitted but transmission performance for either voice or voice-grade data is not assured and no more than one such connection may be established on any one call. Connections from a PBX to the public network may be via PBX-CO, WATS, long distance (LD), or foreign exchange (FX) trunks.

Service Features

There are a number of features available with TTTN service arrangements. Station-to-station calling between locations is made possible by tie trunk switching on a manual or dial basis. Sequential call advancement from PBX to PBX is under control of the originating station or an attendant. A variable number of address digits may be required depending on the location called. Only one connection with the public network (universal service) may be made on any one call.

Network operating features such as a uniform numbering plan, code conversion, digit addition or deletion, and automatic alternate routing are also not available. The recording of traffic information, service observing, and standard tones and announcements are other features not provided. Supervision is not received from the public

network on connections between a tie trunk and a local or foreign exchange central office or between a tie trunk and a WATS trunk. An attendant may have to monitor and release connections of this type.

Transmission Design

The provision of good transmission performance in a TTTN requires sufficiently low losses to provide satisfactorily high received volumes, minimum contrast in received volumes on different calls, and sufficiently high losses to ensure adequate talker echo, noise, and singing performance.

Echo. For purposes of design, tie trunks are divided into two categories which take into account loss, echo, and stability requirements. A round-trip delay of 6 milliseconds can be permitted before echo becomes a controlling design limitation. Trunks with round-trip echo delays of 6 milliseconds or less are designated short-haul while those with round-trip delays of more than 6 milliseconds are designated long-haul.

For carrier facilities, the delay of the carrier system terminals must be taken into account. The curves in Figure 15-2 include the round-trip echo delay of the carrier system terminals and line facilities. An estimate of round-trip delay for two carrier links in tandem may be obtained by adding the appropriate values from the curves. Long-haul design is used for a tie trunk with three or more carrier links in tandem, i.e., the effective round-trip delay is assumed to be greater than 6 milliseconds.

Loss. Tie trunks must be designed to have certain minimum losses in order to control echo. The via net loss (VNL) concept is used for design and where losses would exceed the maximum values permitted, tie trunks should be reassigned to facilities that have higher propagation velocity. Where this is not possible, echo suppressors must be used.

If a tie trunk can be switched to other tie trunks or PBX-CO trunks, it is often equipped at one or both ends with 2-dB switchable pads. These may be switched into the tie trunk to protect against echo for terminating connections and switched out of the trunk for lower loss on through connections and on certain universal service connections.

The primary loss objective for nontandem, tandem, and satellite tie trunks is VNL + 2S + 2S dB, where 2S denotes the 2-dB loss of

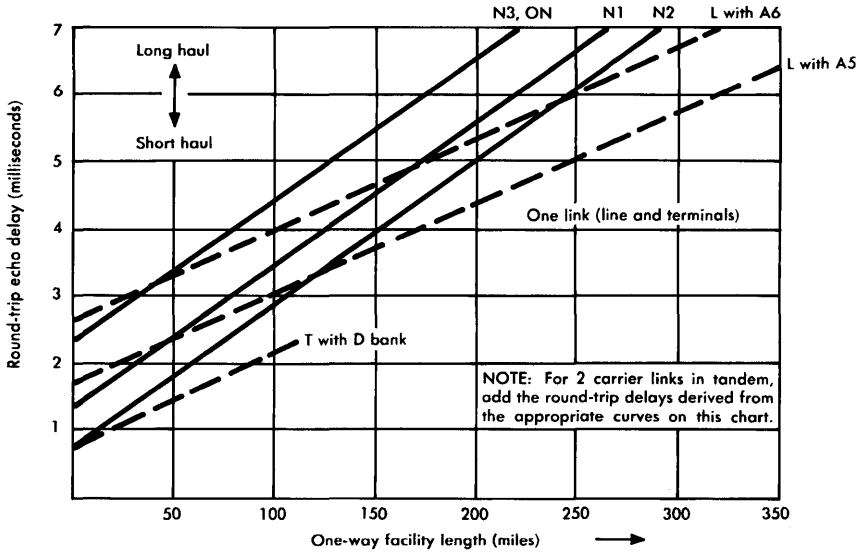

Figure 15-2. Approximate round-trip echo delay of carrier facilities.

a switchable pad. However, the multitude of connection types in which these tie trunks may be used and the variety of tie trunks involved has led to the provision of a number of alternative objectives which depend on various conditions such as the usage of the trunk, whether it is short- or long-haul, and whether or not it utilizes gain devices. For example, tandem tie trunks are sometimes designed to a loss of VNL + 2S + 2.0 dB; i.e., the switchable pad is used at the tandem PBX only.

Simplified designs of short-haul nontandem tie trunks are sometimes used in order to reduce design effort. Where these are two-wire trunks that utilize gain devices, an acceptable objective is a fixed loss of 4.0 dB; if gain devices are not used, the loss of such trunks may be as high as 4.5 dB.

A tandem tie trunk is equipped with a 2-dB pad located in the trunk circuit at the tandem PBX. The pad is controlled by the tandem PBX and is switched in when the connection is to a station line or to a short-haul two-wire tie trunk with less than 2-dB inserted connection loss. However, four-wire design is required for tandem and intertandem tie trunks and is strongly recommended for all other tie trunks. Under certain conditions, two-wire design may

be used for nontandem tie trunks or satellite tie trunks performing a nontandem function. The trunk must be short-haul, not expected to be upgraded to tandem or intertandem operation, and switchable pad operation is not to be used for universal service connections. Since an intertandem tie trunk is equipped with switchable 2-dB pads at both ends, the switching control rules given for tandem tie trunks must be applied at each end. The application of switchable pads to tandem and intertandem trunks is illustrated in Figure 15-3. The pads must be switched out (yielding lower trunk loss) on any through connection to another tie trunk in the tandem tie trunk network. Balance objectives for these connections must be met so that the margin against singing and echo is sufficient. This requires knowledge of all possible switched connections and the associated balance test results. It may be necessary to effect balance improvement within the PBX by means of network build-out and drop build-out capacitors.

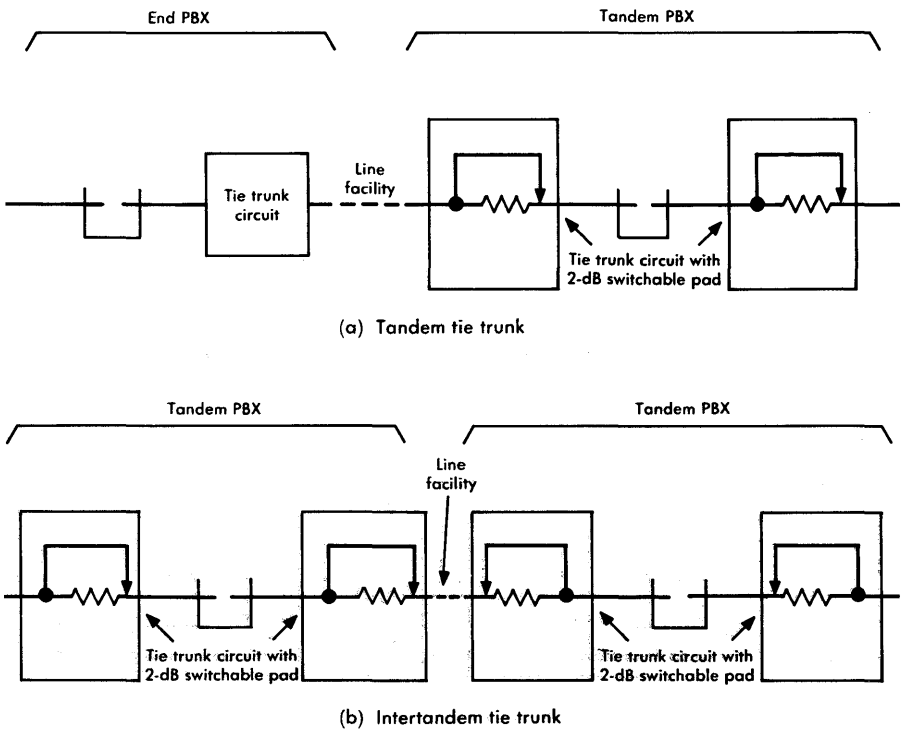

Figure 15-3. Switchable pad arrangement on tandem and intertandem tie trunks.

Connection of tandem or intertandem tie trunks to PBX-CO, FX, LD, or WATS trunks (universal service connections) impose somewhat different rules for control of the 2-dB pads. The pad should be switched out unless the loss of the connected trunk is less than 2 dB or the balance objectives are not met. Balance objectives are not specified when the pad is switched in.

Balance. Tandem tie trunk networks are designed for an overall inserted connection loss of VNL + 4 dB. The design objectives for tandem and intertandem tie trunks are based on the assumption that the trunks involved in a tandem connection meet balance objectives. Four-wire design is required for all tandem and intertandem tie trunks to facilitate meeting balance requirements and to provide for the control of switchable pads.

Low-loss operation of TTTNs requires adequate balance at all points where tie trunks designed to VNL are connected together or to other trunks or lines. Therefore, balance tests are necessary as part of the lineup and acceptance tests for tie trunks operated at VNL.

Terminal balance objectives must be met at all PBXs where tie trunks operating at VNL are connected to tie trunks operating at a loss greater than VNL. Through balance objectives must be met at PBXs where tie trunks operating at VNL are switched together.

In the past, PBXs were engineered to match a nominal impedance of 900 ohms. Later, it was determined that a 500-type telephone set on a short loop presented an impedance closer to 600 ohms. Consequently, current designs are based on a nominal impedance of 600 ohms. Some 900-ohm PBXs are still in service and during the transition from 900- to 600-ohm PBX impedance, it is important that the impedance be determined before any measurements or tests are made.

Through Balance. The most critical balance requirements at PBXs are those for through or intertandem PBX tie trunk connections. Through balance measurements are made to determine the value of network build-out capacitor (NBOC) required and to determine echo return loss (ERL) and singing return loss (SRL). The NBOC to be included in the four-wire terminating set networks is selected to balance the capacitance of the PBX switching equipment and wiring. Since there are numerous connection paths through the PBX, a compromise value of capacitance is selected to provide adequate balance

for any connection. The ERL and SRL tests are used to determine whether objectives are met or whether corrective measures are required.

Terminal Balance. Terminal balance tests are designed to check the balance between the compromise network in the four-wire terminating set of a tie trunk designed for VNL and the two-wire impedance of a connected circuit. The tests are made with a termination at the distant end of the connected facility. Terminal balance tests may be made from the PBX to a representative sample of on-premises stations covering the range of station line lengths. However, all other connections, especially those in which the 2-dB pad may be switched out of the tie trunk, should be tested individually. These include connections to tie trunks not designed for VNL, PBX-CO trunks, FX trunks, and off-premises stations. These tests assure the detection of irregularities that may result in inadequate balance and inferior transmission on built-up connections.

Where through balance tests are required, they should be completed before any terminal balance tests are attempted. The NBOC values determined from the through balance tests are to be used in the networks of all four-wire terminating sets.

Facilities

Any of the carrier or voice-frequency facilities that are used for the public network may also be used for tie trunks. In general, the same considerations as to assignment of channels, use of compandors, etc., apply but in many cases, carrier systems require terminal equipment different from that normally used for the public network.

Since very few carrier system terminals are installed on customer premises, many tie trunks are made up of a carrier section as the center link with voice-frequency facilities at both ends. The design objectives covered in this chapter are to be applied to the entire trunk including the carrier channel, the end links, and the terminal and intermediate equipment. Since the VNL factors are lower for carrier than for voice-frequency facilities, the maximum use of carrier channels results in the lowest overall losses for tie trunks.

15-2 HIERARCHICAL SWITCHED SERVICES NETWORK

Where private communication needs are large, it may be economically advantageous to use a private switched network similar in design and operation to the public switched telecommunications network. These switched services networks (SSN) use combinations of PBXs and/or CTXs. Many SSNs utilize common control switching machines and are often called common control switching arrangements (CCSA). The SSNs discussed here are of this type. They are used to interconnect station lines and trunks to complete calls from one customer location to another or from a customer location to the public switched network at a distant point.

Network Plan

The basic hierarchy plan is shown in Figure 15-4. While the plan is similar to that of the public network, there are some differences due to the customer service requirements; for example, economic considerations may limit the number of direct (high-usage) trunks to a particular location. Thus, on the average, more trunks are connected in tandem for a given connection than would be necessary if direct trunks were provided as in the public network.

The network plan permits a three-level hierarchy, the switching offices of which are designated class SS-1, SS-2, and SS-3. All switching at class SS-1 offices is four wire. At class SS-2 offices, switching may be four wire (using No. 5 crossbar systems) or two wire (using No. 1 ESS). At class SS-3 offices, switching may be either two wire or four wire. Class SS-1 switching offices are only justified in the very largest networks. Some smaller networks may have only one or even no class SS-2 offices.

There are dedicated access lines between each customer location and the serving switching center and there are dedicated network trunks between switching centers. Either a two- or four-wire switching center can be shared by a number of independent SSNs. A two-wire CCSA switching center can be utilized as a centrex and can also serve as a central office in the public network.

Automatic alternate routing can be provided in this type of SSN when the network configuration permits. The originating switching machine routes all calls over available direct trunks. When the direct

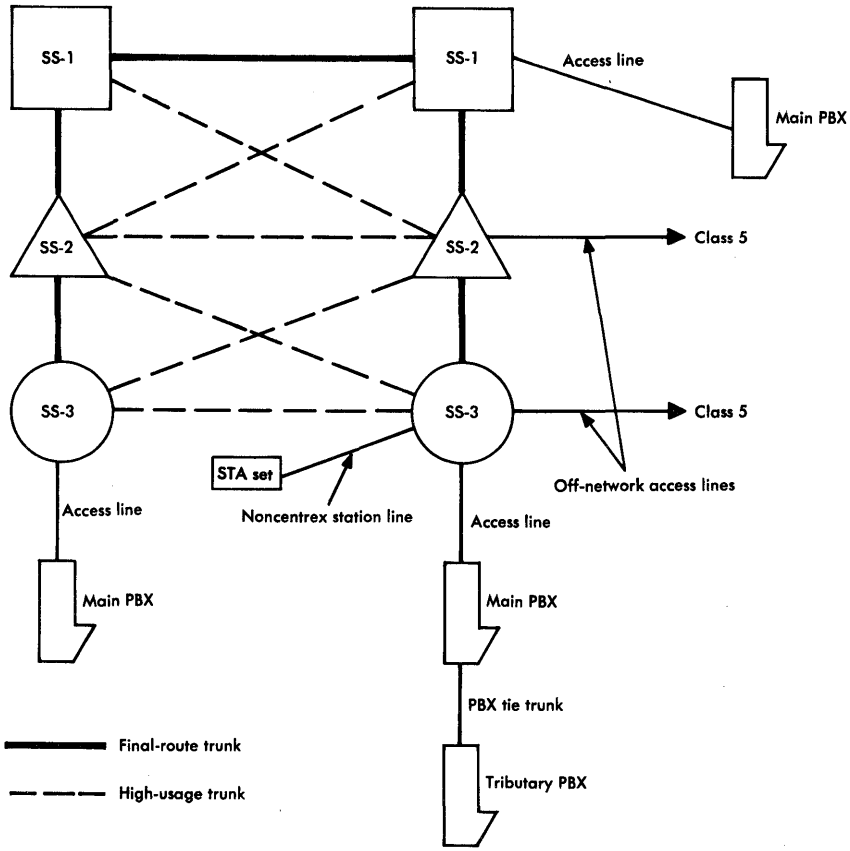

Figure 15-4. Hierarchical network layout.

route trunks are busy, additional calls are routed to first alternate route trunks. If both the direct and first alternate route trunks are busy, the originating switching center routes all additional calls to a second alternate trunk group, if available.

Service Features

Switched services networks utilizing CCSA are capable of providing a wide range of features which include those available in standard PBX and centrex services and in the public switched network. In addition, a number of service features are offered that are unique to CCSA operation.

Each CCSA numbering plan provides a unique 7-digit all-numerical address for each network station, NNX-XXXX, where N can be any digit 2 through 9 and X can be any digit 0 through 9. The arbitrarily assigned NNX portion of the address identifies the customer location where the station is homed but must not be the same as the NNX digits assigned to a customer location for public network use. The remaining XXXX digits are the numbers of the individual station at the customer location and are generally the same for both the SSN and the public network.

A network station served by a dial PBX/CTX or a station directly terminated on a network switching machine can be called by dialing the 7-digit address of the station. When a station is served by an attendant for calls in and out of the network, the 7-digit address is assigned to the attendant access lines instead of to the stations. Individual or attendant-assisted transfer of inward calls is an optional feature. Any nonrestricted dial PBX/CTX station or any station served directly by an SSN switching machine can dial a network call. Any manual PBX station or key station can place a network call through an attendant.

A maximum of 20 percent of network call attempts may be recorded on a continuous sampling basis by automatic message accounting equipment. The data are available to the operating company to aid in the engineering and administration of the network and to the customer to aid in allocating costs. In No. 1 ESS offices, 100 percent of call attempts may be recorded but these data are not always generally available.

One-way or two-way access to the public network (universal service) may be provided by off-network access lines to collocated or other central offices. Connection to the public network via WATS trunks may also be provided. Off-network calls to an SSN station are screened by an attendant and, if accepted, completed to the network station. Transmission preformance on universal service connections may not be satisfactory when interconnection with the public network is made at more than one point per call.

Switching

Interlocation switching is carried out by main, tributary, and satellite PBX and centrex arrangements interconnected by tie trunks

and connected by access lines from a main PBX/CTX to the network switching machines.

A tributary PBX is attended, homes on a main PBX for network access, and has PBX-CO trunks for access to the public network. A satellite PBX is generally unattended and may home on either a main or tributary PBX/CTX. All incoming calls from the public network to the satellite PBX are routed through the PBX/CTX on which it homes. A satellite PBX homing on a tributary PBX/CTX tends to degrade transmission performance and is not recommended. The satellite PBX should have direct tie trunks to its main PBX/CTX for network service.

PBX Arrangements. A No. 5 crossbar system or a No. 1 ESS may be used as a main centrex; a step-by-step, crossbar, or ESS machine may be used as a main PBX. Access lines are usually terminated through a two-way dial repeating tie trunk circuit at the PBX. The PBX may be arranged for inward dialing and access to tie trunks to tributary PBXs. Arrangements for outgoing traffic depend on whether traffic is handled through an attendant or on an outward dialing basis. The tributaries and satellites of a main PBX may be manual, dial, or centrex. The type of equipment determines the tie trunk circuits used and the extent to which inward and outward dialing can be applied.

Office Arrangements. Standard No. 1 ESS and two-wire No. 5 crossbar machines may be used to provide class SS-3 switching functions, to serve as main PBXs/CTXs when equipped for centrex service, or to serve as combination offices that simultaneously serve a CCSA and the public network. Circuits which terminate access lines on the line side of the office permit the machine to connect access lines together. While the primary function of a class SS-3 office is to interconnect access lines and network trunks in various combinations, switched service noncentrex station lines may also be homed on a class SS-3 office.

A four-wire No. 1 ESS or a four-wire No. 5 crossbar switching machine may be used as a class SS-1, SS-2, or SS-3 office. These systems provide for common control, transmission testing with a master test frame, use of automatic transmission test lines, etc.

Transmission Performance Requirements

Transmission considerations in a CCSA network are similar in many ways to those of the switched public network. Loss, noise, and

echo must be considered in the layout of the network and the design of trunks, access lines, and station lines that provide the transmission paths. The design of the transmission paths is basically the same as the VNL design used for the switched public network.

The basic transmission plan does not include the provision of envelope delay equalization; attenuation/frequency equalization should normally be applied only to the extent necessary to meet the switched public network objectives. However, when service requirements are more stringent than can be met by the basic plan, special conditioning in the form of equalization (either delay or attenuation/frequency or both) can be provided on trunks or access lines. Other requirements, such as those for noise, are usually met without difficulty since facilities are similar to those used in the public network.

Through balance requirements must be met where network trunks are switched together or to access lines. Terminal balance requirements apply where trunks or access lines are switched to station lines.

Loss. The overall design loss objective is developed by first considering the loss between PBXs/CTXs as comparable to that between end offices in the public network, VNL + 4 dB. When VNL design is applied to circuits that may be used for extremely long connections, excessive loss may result and consideration must be given to the use of echo suppressors.

Balance. In order to meet echo return loss and singing objectives at a two-wire class SS-3 office, it is necessary to perform balance procedures similar to those required at a class 3 office in the public network. Through balance requirements must be met on network-trunk-to-access-line and access-line-to-access-line connections and, where network trunks or access lines are connected to noncentrex station lines, terminal balance requirements apply. While the average ERL and SRL values are the same as those specified for the public network, minimum allowable values are somewhat more stringent. Terminal balance requirements at a main PBX are similar to those imposed at a class 4 office in the public network. Terminal balance procedures for two-wire No. 5 crossbar toll offices, in general, apply to a main centrex.

When VNL-designed access lines are connected to station lines at a PBX, 2-dB switchable pads are required in the access lines at the

main PBX to improve the return loss. The pads are switched out on connections to PBX tie trunks except when the loss of the tie trunk is less than 2 dB or when the tie trunk impedance cannot be corrected to provide satisfactory return loss. At a No. 5 crossbar centrex main PBX, the 2-dB pads are located in the access line trunk circuit and are switched in or out of the circuit by a pad control relay. The use of the pad in the connection is determined by the type of circuit to which the access line is connected. When a two-wire No. 5 crossbar machine serves both as a class SS-3 office and a centrex main PBX, 2-dB switchable pads are provided in network trunks. They are also provided in access lines to remote centrex main PBXs and in intra-office trunks used to connect access lines to main PBX station lines.

If terminal balance objectives are to be met with the 2-dB pad switched out on connections between network trunks or access lines and PBX tie trunks, the tie trunks must be designed to meet ERL and SRL requirements similar to those of toll connecting trunks. For example, two-wire circuits on H88 loaded cable should be equipped with impedance compensators at the main PBX end and cable loading irregularities should be eliminated. Where it is not possible to meet the return loss requirements, it is necessary to switch in the 2-dB pad.

Noise. Message circuit noise requirements for trunks and access lines are stated on the basis of mileage and, in general, if all trunks and access lines meet requirements, an overall connection can also be expected to meet requirements. The requirements are reduced by 5 dB for compandored facilities. When both compandored and non-compandored facilities are included, no reduction is made.

Objectives for impulse noise provide signal-to-impulse noise ratios which permit data transmission with an error performance comparable to that achieved in private line service. Because of the random nature of impulse noise on switched connections, control is provided by establishing conservative standards on individual circuits.

Frequency Response. In order to meet end-to-end attenuation/frequency distortion requirements, not more than seven trunks should be connected in tandem for voice transmission within the network. The PBX facilities should be arranged so that no more than eleven circuits may be connected in tandem on any connection. If the requirements for individual links are not met, excessive distortion may

be encountered on maximum length connections. There are no envelope delay distortion requirements specified for trunks. Where data transmission is required, delay equalizers are installed on access lines and subscriber lines to provide the required conditioning.

Trunk Design

Among the factors that must be considered when designing a network trunk are the type and class of office at each end of the trunk, the type and arrangement of facilities, and the need for echo suppressors. Network trunks are designed for 0 dB or VNL dB depending on the switching machines involved and whether echo suppressors are provided. All network trunks should be designed from the outgoing switch of the originating office to the outgoing switch of the terminating office. The TLP at the outgoing switch is —2 dB as in the public network. If the trunk is switched between class SS-1 and/or SS-2 offices, the loss at 1004 Hz should be 0 dB. Trunks switched between other offices are designed for VNL dB. In order to keep the overall loss between stations within limits, the loss of the network trunks should not exceed certain specified values. The 1004-Hz losses for trunks in the final route between class SS-3 and SS-2 offices may not exceed 2.0 dB. High-usage trunk losses between class SS-3 and SS-2 or between class SS-3 offices may not exceed 2.5 dB. If VNL design exceeds the maximum, echo suppressors should be provided and the losses reduced to 0 dB. Figure 15-5 illustrates a typical CCSA showing the types of offices, the design and maximum losses for various types of trunks and lines, and the application of echo suppressors.

Facilities. Since network trunks are four-wire, carrier facilities are commonly used. Moreover, to minimize equalization and to facilitate maintenance, each trunk should be designed for a minimum number of channel banks, preferably no more than one pair. All channels of any carrier system that use L-type multiplex equipment are acceptable. Channels 1 and 12 of any multiplex group which includes group connectors should be last choice. The rules for group and supergroup selection, maximum number of groups and supergroups in tandem, and similar considerations should be the same as for intertoll trunks.

The short-haul N-type and later designs of T-type carrier systems may also be used for network trunks. If alternate voice and data operation is required or anticipated, compandored channels may be used provided the data signal amplitude is constant and there is no

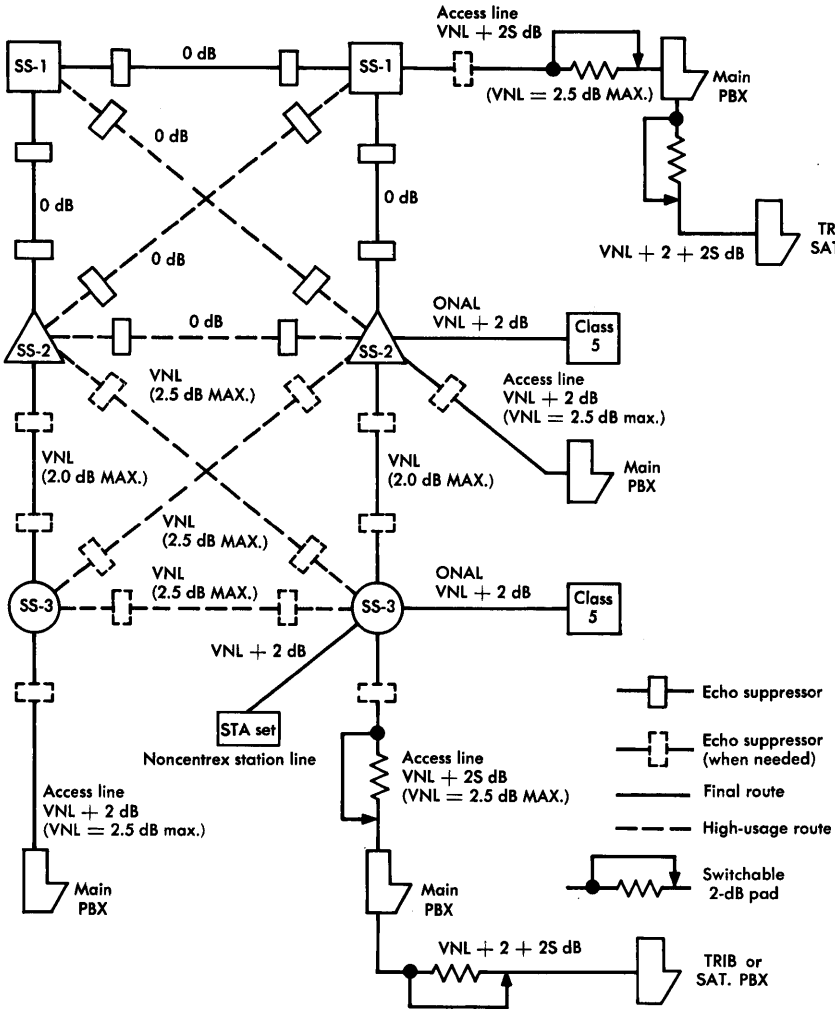

Figure 15-5. Transmission plan for a CCSA network.

multiplexing of data signals on the same trunk. Special service channels may be used in N-type systems if only data is transmitted.

Echo Suppressors. Network trunks require echo suppressors in accordance with rules which apply to all networks in which a two-wire station can be connected at either or both ends of a connection. Split echo suppressors are required on all network trunks that interconnect

any combination of class SS-1 and SS-2 offices. Split or full echo suppressors are required on all other network trunks whose computed VNL exceeds the specified maximum. Trunks longer than 2500 miles require split suppressors. Echo suppressors should be split on all suppressor-equipped trunks which can be connected in tandem with other suppressor-equipped trunks or with four-wire subscriber lines.

When split echo suppressors are required, they are arranged at intermediate switching offices so that they may be disabled or enabled under controlled conditions. The suppressors at the extreme ends of the trunks in the built-up connections are enabled. A split echo suppressor at a four-wire switching machine is normally disabled. When a call originates from a two-wire station, the suppressor is automatically enabled. Echo suppressors should contain a tone-operated disabler to override the enabling signal and remove the suppressor from the connection to permit duplex data transmission.

Figure 15-6 shows a typical arrangement of controlled split echo suppressors for a tandem connection between two-wire station sets. The echo suppressors are enabled at the extreme ends of the connection but are disabled at the intermediate four-wire office to avoid tandem operation of echo suppressors.

Access Lines

The transmission links that interconnect a main PBX/CTX with the serving switching center are called access lines. As shown in Figure 15-7, they are analogous to toll connecting trunks when interconnecting PBX station lines with CCSA network trunks and analogous to intertoll trunks when interconnecting PBX tie trunks and CCSA network trunks. Access lines are four-wire design and are operated at VNL with switchable 2-dB pads located at the PBX/CTX. The pads are switched out when access lines are connected to PBX/CTX tie trunks. Where there are no tie trunks terminated at a main PBX/CTX and where pad switching is not used on universal service calls, an access line may be operated in the normal manner at VNL with the 2-dB pad inserted at all times or it may be operated at VNL + 2 dB with no switchable pad.

The maximum loss (exclusive of switchable pad) should not exceed 2.5 dB. This loss corresponds to approximately 1400 miles of carrier facilities. Where the type of facility and/or the length of the circuit

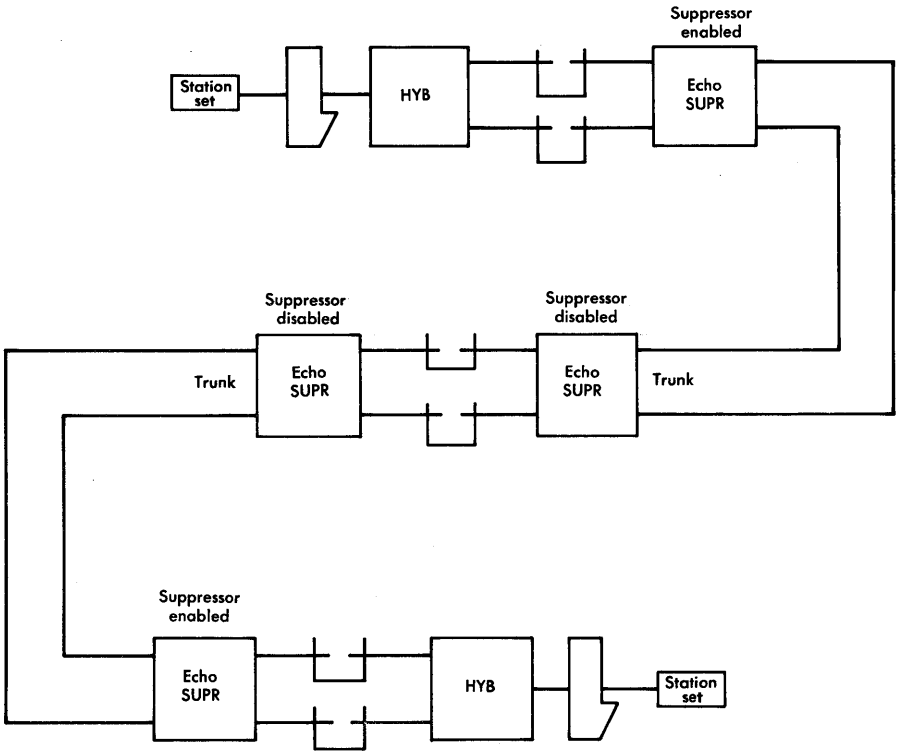

Figure 15-6. Controlled split echo suppressors.

would result in a VNL of more than 2.5 dB, every effort should be made to use facilities with a higher velocity of propagation or to home the access line so that the loss requirement can be met. The use of echo suppressors on access lines to permit lower than VNL operation should be avoided because of the possibility of tandem echo suppressor operation.

All CCSA network trunks, access lines, and noncentrex station lines terminate in a nominal impedance of 900 ohms at a two-wire class SS-3 office. At four-wire switching centers, the nominal termination impedances are 600 ohms; at CTXs, the nominal impedance is 900 ohms; and at PBXs, the impedances may be either 600 or 900 ohms.

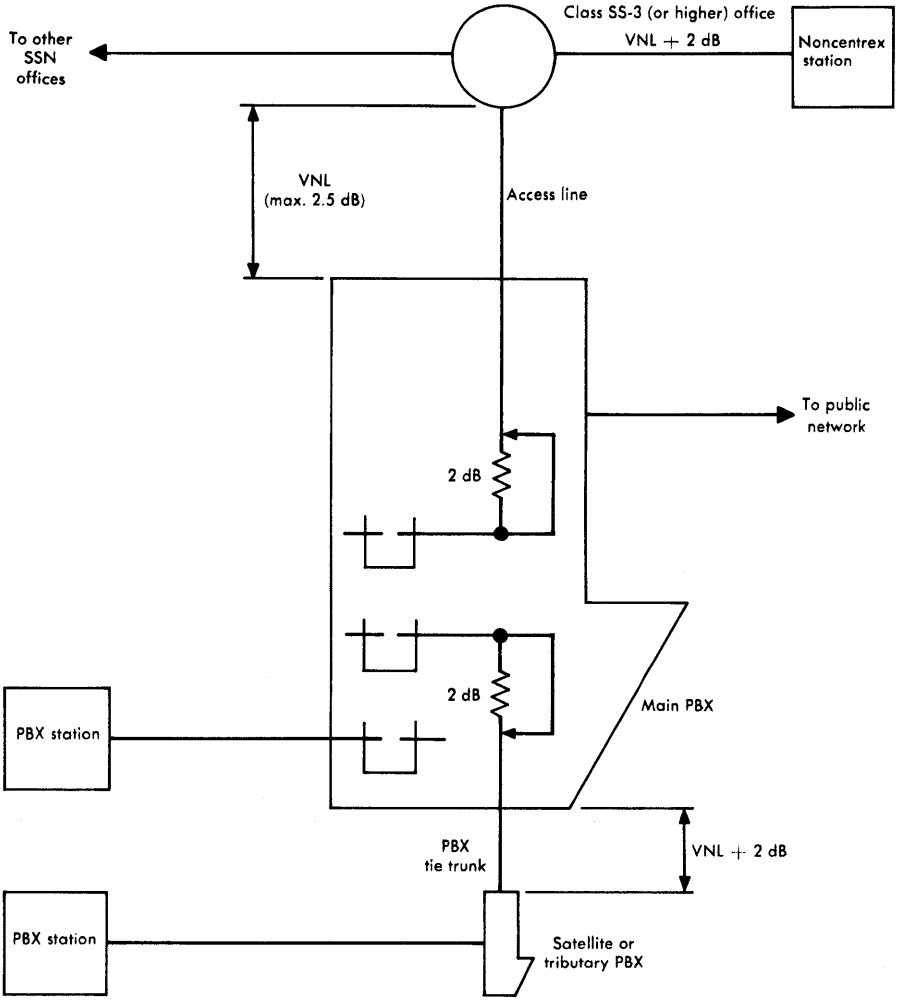

Figure 15-7. Typical switching arrangement for access lines and local PBX facilities.

A switched service noncentrex station line served by a class SS-3 office is a form of access line since connections can be made to any part of the CCSA. This type of line should be operated at VNL + 2 dB if the round-trip echo delay is 6 milliseconds or less. If the round-trip delay exceeds 6 milliseconds, the line should be designed for a loss of VNL + 4 dB or a 2-dB switchable pad should be used at the class SS-3 location.

Terminal balance requirements are applied to noncentrex station lines in both two- and four-wire offices. When the loss of the line is less than 2 dB or when the impedance cannot be corrected, a 2-dB pad should be used at the class SS-3 end of the station line.

PBX Tie Trunks

In a switched services network, tributary and satellite PBX tie trunks and off-premises station lines must be considered as integral links in the network. It is often more difficult to provide good quality transmission on these tie trunks and station lines than on the access lines and network trunks.

Ideally, access lines would be terminated at all PBXs and CTXs. Each PBX/CTX could then be treated as an end office equivalent to a class 5 office in the public network with access lines designed for VNL + 2 dB in a manner similar to toll connecting trunks. However, in practice, access lines may terminate only at a main PBX/CTX; other PBXs/CTXs become tributaries or satellites and home on the main PBX/CTX by means of tie trunks as shown in Figure 15-5.

Off-premises station lines at tributary and satellite PBXs/CTXs should be rehomed on the main PBX/CTX wherever practical. Satellite PBXs homed on tributary PBXs/CTXs should be avoided because of the increase in overall network loss and the insertion of additional delay which might affect echo suppressor requirements.

The designed loss of tie trunks is VNL + 2 dB if the tie trunk has a round-trip echo delay of less than 6 milliseconds. A tie trunk with more than 6 millseconds round-trip delay must be designed for a loss of VNL + 2 dB with a 2-dB switchable pad at the main PBX. This establishes a loss of VNL + 4 dB for connections to stations at the main PBX and VNL + 2 dB for connections to the network. The frequency response and impedance requirements for PBX tie trunks are the same as those previously given for access lines.

Station Lines

Most station lines are two-wire connections to a CCSA network through a PBX or centrex switching machine. However, four-wire lines, called subscriber lines, are provided to connect four-wire station equipment to a four-wire switching center. These are used to provide

improved performance for voice or data services by reducing the number of lines and trunks in tandem and by taking maximum advantage of the improved transmission inherent in four-wire operation. The station may be a telephone set or a data set; both may be provided for alternate voice-data use. Provision may also be made to transfer the subscriber line from a station set to a PBX in which case the design requirements for access lines must also be met. This feature, called dual use, is provided by operating a transfer key at the customer premises. A subscriber line is considered to extend from the outgoing switch of the serving four-wire switching office (—2 dB TLP) to the four-wire test jacks of the subscriber line circuit at the customer premises.

Universal Service

The switched services network and switched public network may be interconnected at a main PBX on a manual basis or at a CCSA office on a machine-switched basis. Universal service calls may originate in either network.

The provision of satisfactory performance on universal service calls can only be accomplished with certain limitations. The transmission objectives established for CCSA networks tend to minimize the transmission penalty on universal service calls but do not make it possible to guarantee satisfactory transmission on all such calls. The degree of satisfaction on universal service calls is difficult to predict because the transmission quality depends upon such factors as the relative locations of the stations in the two networks and the method used to make the interconnection. It is preferable that universal service calls be limited to the serving area of the central office associated with the main PBX or off-network access lines. Although the losses encountered on toll connections may be no higher than those on local connections, the effect of echo may be an added consideration. A reasonable quality of voice transmission can be expected only if the interconnection is restricted to one point on any given call. Data or similar services should terminate in the same network as that in which they originate.

Where a tributary PBX/CTX is in a toll rate area different from that of the main PBX/CTX, it may be necessary to complete universal service calls through the tributary PBX/CTX. However, the concentration of universal service traffic at the main PBX/CTX greatly

improves the economics of providing special low-loss facilities for universal service calls and eliminates the loss of the tie trunk between the main PBX/CTX and the tributary PBX/CTX. In order to improve the possibility of acceptable transmission on universal service calls, it is also essential that the loss between the main PBX and the serving central office satisfy established objectives.

Machine switched universal service connections should be made at CCSA offices. Completion of universal service calls via PBX-CO trunks is not recommended because this type of connection results in as much as 7 dB more loss than a connection over an off-network access line from the CCSA office. The CCSA network trunks are designed for VNL; therefore, off-network access lines designed for VNL + 2 dB should be provided to a local central office. These facilities must meet terminal balance requirements at the CCSA office. Calls to network stations from the public network are routed from the local central office to a main or tributary PBX over off-network access lines. The PBX operator then completes the calls to the network stations. To provide the best possible transmission on these connections, it is essential that the off-network access lines be operated at VNL + 2 dB and that the 2-dB pads in the access lines be switched out if possible.

Data Transmission

Design objectives for the SSN utilizing CCSA are established to provide a quality of data service which, as a minimum, meets DATA-PHONE objectives for the public network. The designs of access lines and PBX tie trunks and station lines generally do not include delay equalization. Where the requirements are more stringent, it may be necessary to provide special conditioning on some of the facilities. It may be advantageous to provide a direct line from the data set to the main PBX to avoid equalization of tie trunks but loss introduced by the access line may be a problem. However, it is recommended that data sets used with a CCSA be connected directly to a CCSA office.

15-3 ENHANCED PRIVATE SWITCHED COMMUNICATIONS SERVICE

Large users of communications services may find that the features available with Enhanced Private Switched Communications Service (EPSCS) can fulfill their needs better than a CCSA network. The

EPSCS provides features similar to those available in a CCSA network and provides additional features made possible by the application of advanced switching techniques.

The organization of a network for EPSCS involves a two-level hierarchical arrangement of switching machines. These arrangements provide four-wire transmission paths to combinations of PBX, centrex, key system, station set, automatic call distributor, or data set equipment. Various combinations of trunks and access lines are used to interconnect the switching machines and customer locations. Automatic alternate routing capability is provided for EPSCS calls.

Network Plan

The two-level trunk and switching hierarchy for EPSCS is shown in Figure 15-8. The two switching office levels, designated S-1 and S-2, are both provided by No. 1 ESS machines equipped for HILO switching [2]. Thus, most connections through the network, including trunks, access lines, and station lines, are four-wire from terminal to terminal. The S-1 and S-2 switching machines may be shared by the public switched message network, other CCSA private networks, and other EPSCS networks.

In addition to high-usage and final-route trunks between network switching offices and access lines to PBXs/CTXs, one-way bypass access lines are provided for direct call completion, where desired, from an S-1 office to a main PBX/CTX. Alternate routing of network calls is controlled from the originating switching center. Calls are routed over first choice (high-usage) trunks when available; when all are busy, additional calls are routed over second-choice trunks.

Traffic to and from the public switched message network is routed over off-network access lines (ONAL) or WATS trunks. Calls to or from the local exchange area via an ONAL provide a reasonable quality of transmission, though somewhat poorer than message network performance. However, calls via an ONAL to a distant message network exchange are generally of poorer quality than would be experienced in the case of calls to the local exchange. In either case, satisfactory transmission cannot be assured. Off-network to on-network to off-network connections are not provided since transmission and signalling difficulties would be encountered.

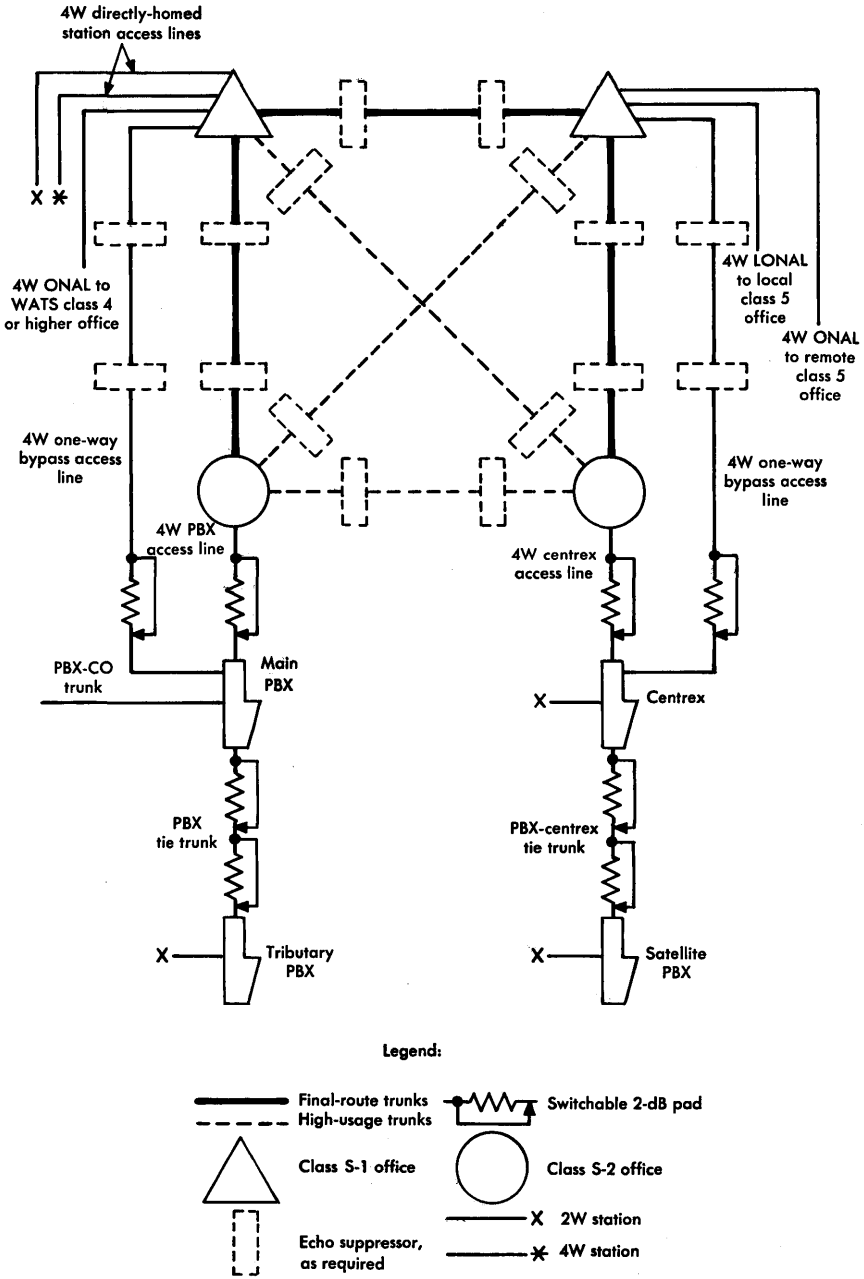

Figure 15-8. EPSCS network and transmission plan.

A Customer Service Administrative Control Center and a Customer Network Control Center are specified for use with EPSCS. These centers utilize network status information which is transmitted over intermachine data links made up of standard voice-frequency data circuits. Details of originating call messages are provided at the Customer Network Control Center. Included are the date, originating switch identification, outgoing trunk group, and connect and disconnect times for all network calls. In addition, other traffic-related information is made available and customer-selected options may be exercised. These options include changes in assigned user class-of-service codes, assignment of conferencing authorization codes, changes in call routing patterns, and day/night routing for services off the private network.

Service Features

Many types of telephone and data services can be provided by the EPSCS. Many of the services available are among the standard features of the EPSCS; others are offered as customer-selected options.

Standard Features. A substantial number of features are available and furnished with each EPSCS installation. These include the provision of a standard numbering plan, a number of traffic-oriented features, and flexible arrangements for data signal transmission.

The Numbering Plan. A 7-digit uniform numbering plan is used for EPSCS stations. Calls intended for off-network terminations are dialed with a 10-digit code.

Attendant services are provided by the customer. Attendant calls from within the network are dialed by using either a 7-digit or a 3-digit code. Incoming calls from outside the network are automatically routed to the appropriate attendant as determined by the customer.

Traffic and Routing Features. Any station served by the EPSCS may be dialed directly by any other station on the network. As previously mentioned, automatic alternate routing is provided with up to a maximum of three alternate routes at each switching center. The number of alternate routes is determined by the configuration and the number of switching machines in the network.

The bypass arrangements, previously mentioned and shown in Figure 15-8, permit connections to be completed without going through the terminating switching machine. These bypass access lines, in effect, provide high-usage circuits from S-1 switching offices to PBXs/CTXs.

Calls from locations within an EPSCS to locations outside the network are routed automatically by the switching machine or PBX/CTX to a four-wire ONAL, to a class 4 or higher switched message network office, to a local or remote class 5 office, or to a PBX-CO trunk as appropriate. Calls from the switched message network to a PBX/CTX location are automatically routed to the appropriate location (direct inward dialing) without involving EPSCS.

Various tones (such as dial tone and reorder tone), similar to those used in the switched message network, are used to indicate call status. Recorded service announcements are also used to provide information such as that associated with vacant codes and user dialing restrictions. For example, class-of-service restrictions are provided at the switching machines to permit different calling capabilities on selected lines. Among others, one-way incoming, one-way outgoing, and two-way lines are distinguished by these service restrictions.

Network circuits are automatically scanned for failure to respond to signalling or for failure of transmission continuity. When such tests are failed twice, the circuits are automatically identified at the control center and removed from service. Network switching machines may also be connected to automatic trunk testing systems. Circuits not used during busy hours are also identified at the control center.

Data Transmission. Voiceband data performance requirements are such that acceptable performance can only be provided at locations served by facilities capable of supporting the basic requirements. If customer needs demand higher performance capability, access lines must be conditioned accordingly. However, conditioning is provided only when specifically ordered under an existing tariff offering.

Optional Features. Among the many features that can be furnished optionally are network operations features, traffic features, and user options that may be selected to satisfy the unique needs of a particular customer.

Network Operations Features. Several optional features that relate to EPSCS operations are offered with this service. One involves call queuing, another involves the screening of originating calls, and a third involves the type of attendant service provided.

With the queuing option, calls which cannot be completed because primary and alternate route circuits are busy may be placed in queue by the switching machine. Such calls remain in queue until a circuit becomes available at which time the call is completed. If the time in queue exceeds a customer-predetermined limit, a reorder signal is returned to the call originator. Priority queuing can also be provided with the use of authorization codes.

Originating calls may be screened so that selected circuits that connect customer locations to EPSCS switching machines may be denied outgoing service to certain designated central offices or numbering plan areas. When such calls are attempted, they are routed to a recorded announcement. A network may have local or centralized attendant service or both.

Traffic Features. A sequence of up to four (one primary and three alternate) routes can be provided for completing calls to off-network locations. Upon encountering a busy condition on the primary route, a call is automatically routed to the first available trunk in the alternate route sequence. Sequences may be predetermined by the customer.

User Options. Conference arrangements in EPSCS allow the simultaneous connection of up to six stations. Access to the conference arrangement is provided by having each conferee dial a preassigned number. Three types of control can be applied at the Customer Network Control Center. First, the center assigns conference authorization codes which allow access to the conference circuits and ensure privacy. Second, the control center can apply a warning tone to notify conferees that the allocated conference time has elapsed. Third, the control center can activate a forced disconnect to terminate the conference arrangements.

A customer-formulated recorded announcement can be provided at each switching machine. One announcement per customer per machine is available and can serve from 3 to 20 simultaneous connections. The announcement is placed in service or changed by a customer-initiated telephone company service order.

After dialing, the user can be notified to dial an authorization code. When this option is elected by the customer, a unique tone is transmitted by the switching machine to notify the caller that the authorization code must be dialed before the call can be processed. The machine also performs a verification check and then includes the code in the call detail record. The authorization codes can be changed by appropriate operations at the Customer Network Control Center.

Switching

In addition to the No. 1 ESS machines with HILO switching used for S-1 and S-2 network switching, PBX or centrex switching may be employed to satisfy local requirements at each customer location. These switching machines provide two-wire transmission paths. Thus, where four-wire transmission is required all the way to the station set, four-wire station access lines must be used as direct connections from an S-1 or S-2 office to the station location.

Main PBXs and centrex switching machines are connected to the network by appropriate access lines. Tributary and satellite PBXs may be connected to the network by way of a main PBX or centrex. Connections between the PBXs and/or centrex locations are made by means of PBX or PBX-centrex tie trunks.

Transmission

Network trunks and various types of access lines provide the transmission paths in an EPSCS in much the same manner as in a CCSA network. The transmission plan is based on the via net loss concept and the VNL plan recommended for EPSCS is similar to that used in the switched message and CCSA networks. The losses prescribed for EPSCS circuits are summarized in Figure 15-9. Noise objectives are generally the same as those specified for the public switched message network.

Intermachine Trunks. Two loss values are shown in Figure 15-9 for intermachine trunks. The VNL value applies to trunks without echo suppressors. Echo suppressors are used and the loss is set to 0 dB on final intermachine trunks longer than 1150 miles and on high-usage intermachine trunks more than 1850 miles long.

Access Lines. Customer premises equipment (a PBX, key system, station set, data set, or automatic call distributor), a class 4 or higher wide area telecommunications service (WATS) serving office, and a

TYPE OF CIRCUIT	1004-Hz ICL OBJECTIVE
Four-wire intermachine trunk	VNL dB (0 dB with echo suppressor)
Four-wire PBX/CTX access line or bypass access line	VNL + 2S dB
Four-wire OFF-NET access line (ONAL)	VNL + 2 dB
Four-wire WATS trunk to class 5 office	VNL + 2 dB
Four-wire WATS trunk to toll office	VNL dB
Four-wire directly-homed access line (two-wire station set)	VNL + 4 dB
Four-wire directly-homed access line (four-wire station set)	6 dB

Figure 15-9. Transmission loss plan for EPSCS.

class 5 office are connected to an EPSCS switching machine by an access line. Different designations are used to identify the type of access line according to the function and type of equipment involved.

PBX and Centrex Access Lines. These are four-wire circuits that connect a PBX or a centrex to an EPSCS switching machine.

Bypass Access Lines. Four-wire circuits, called bypass access lines, are used as one-way circuits to connect a distant PBX or centrex of primary interest directly to an EPSCS switching machine while bypassing the machine that normally would serve the PBX or centrex.

Off-Network Access Lines. Connections between an EPSCS and the switched message network may be made by means of several types of off-network access lines which connect an EPSCS switching machine to a switching machine of the switched message network. An ONAL is a four-wire circuit that connects the EPSCS to a class 5 office generally within the same metropolitan area as the EPSCS switching machine. A WATS trunk can also be used to provide wide area telecommunication service to an EPSCS. This type trunk should terminate in a class 4 or higher message network office.

Directly Homed Station Access Line. A four-wire line may be used to provide a direct connection from an individual station, data set, or key telephone system to an EPSCS switching machine. Station

equipment may be two-wire or four-wire. If it is two-wire, the four-wire to two-wire conversion is made at the customer premises.

PBX Trunks. Standard PBX trunk facilities may be used to provide connections from PBXs to the public switched message network and to interconnect PBXs. Standard PBX-CO and FX trunks may be used with PBXs that are part of an EPSCS. Standard tie trunks are used to interconnect a satellite or tributary PBX to a main PBX or centrex.

Balance. The use of four-wire transmission and switching facilities makes unnecessary the application of through balance procedures in EPSCS. However, impedance mismatches may still occur at four-wire to two-wire interfaces. Thus, terminal balance requirements are applied in order to control echo return loss and singing return loss. Tests for terminal balance must be made at EPSCS switching machines, PBXs, centrex locations, and toll offices that provide WATS facilities.

15-4 POLYGRID SWITCHED SERVICES NETWORK

A polygrid network employs a continuum of grids of interconnected switching centers, all of equal rank. The switching centers are interconnected in such a way that a large percentage of them would have to be rendered inoperative before network service would be disrupted. Thus, the network is highly survivable and provides optimum assurance for call completion. An example of a polygrid SSN is the automatic voice network (AUTOVON), a worldwide communication system used by the United States Department of Defense.

Network Plan

The polygrid network actually consists of two structures, one superimposed upon the other. The basic network structure, shown in Figure 15-10, furnishes short- and medium-haul capabilities. The basic unit of this structure is the home grid which is a set of switching centers surrounding and directly connected to a destination center as shown in Figure 15-11. Most switching centers have direct trunk groups available from several adjacent centers. Home grids are functionally discrete even though they may overlap and share a number of switching centers to allow traffic routing over many different transmission paths. Home grid arrangements are similar

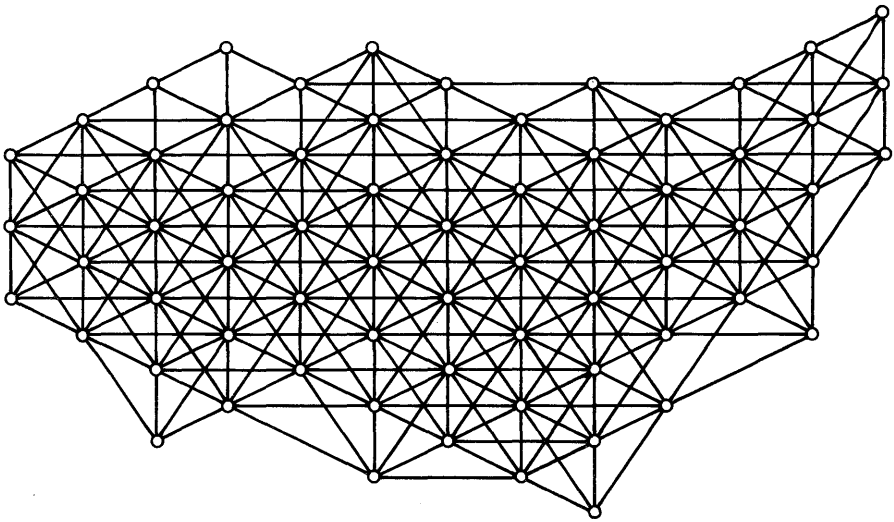

Figure 15-10. Configuration of a basic polygrid network.

for most switching centers except for the truncated patterns of those peripherally located.

In order to minimize the number of tandem links on long connections, a long-haul network is superimposed on the basic network structure as shown in Figure 15-12. To reach the destination center, the call is advanced via an exterior routing plan, so called because it is exterior to the home grids. There are ten possible exterior trunk routes that can be programmed to a destination switching center from an originating center. One is a single trunk group connected directly to the destination center. In addition to the direct route, there are nine alternate routes in sets of three, called triples. The first is called the most direct triple and normally represents a set of three forward routes. The second group is called the best alternate triple and the third is designated the second best alternate triple. Both the best and second best alternate triples normally represent lateral routes.

An example of a set of ten exterior routes is shown in Figure 15-12 for a call originating at center S and destined for center D. The direct trunk group is the first choice as the best possible route for

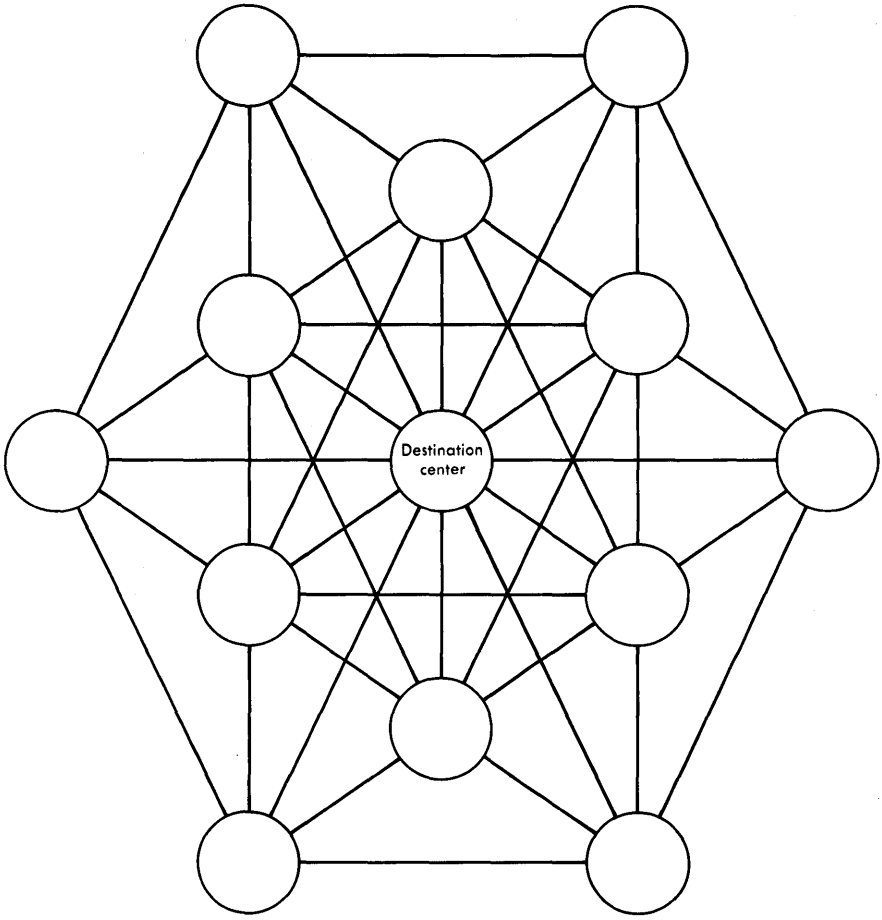

Figure 15-11. Home grid.

all calls. Of the three triples shown, the two designated most direct triple and best alternate triple are preferred because they represent forward routes that advance the call to switching centers which are considerably nearer the destination center than the originating center. The second best alternate triple employs lateral routes which do not advance the call but which are important for survivability because they would automatically be available to circumvent damaged or overloaded sections of the network. The routing program deter-

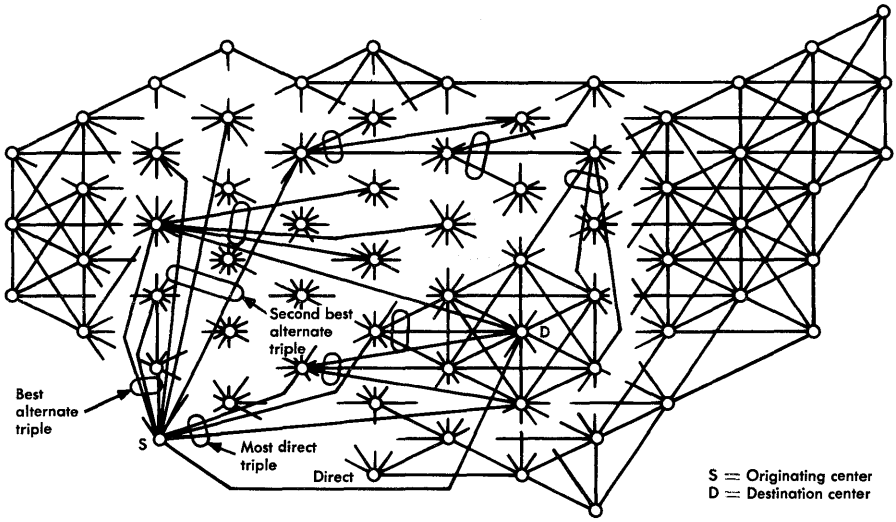

Figure 15-12. Long-haul routing.

mines the route a call might take. The route is selected on the basis of the precedence of the call, its destination, and the congestion of the programmed routes. The sequence of selection of an outgoing trunk group is not fixed for precedence calls. On each new call, the hunting sequence for each triple is rotated to avoid possible repeated call blocking at a tandem office.

Service Features

All standard basic service features available in central office switching machines may be provided. Features of SSNs previously mentioned, such as class-of-service and duplex operation, are available. In addition, some unique and special features are available.

A dedicated polygrid network such as AUTOVON offers a number of special service features. This network is designed to transmit data at various bit rates as well as speech signals. Both two- and four-wire station sets are used. Generally, stations served through PBXs are two-wire whereas stations connected directly to a switching center are four-wire. All network switching offices are four-wire and all trunks are of unconditioned four-wire voice-grade design; access lines and subscriber lines are available with a number of conditioning options.

A number of special features can be provided on an automatic or selective basis under class-of-service or user control. Some of these special features are controlled by the operation of auxiliary pushbuttons or by the keying or dialing of a prefix code at the station set. Other unique and optional features are multilevel precedence preemption, off-hook service ("hot line"), and automatic and selective conferencing.

TOUCH-TONE calling provides a method for pushbutton signalling with 16 distinct two-tone signals, 10 of which are used for regular telephone services. Two buttons, marked ☆ and A, are for special services. For example, if during the process of setting up an automatic conference call, a conferee does not answer, the conference announcement tone continues. Should it be desirable to conduct the conference even though all conferees are not connected, the originator may remove the conference announcement tone by depressing the button assigned for that purpose (usually the button marked A). The four buttons on the right side of the TOUCH-TONE pad are marked FO (flash override), F (flash), I (immediate), and P (priority) to designate precedence levels. Users who are authorized a certain precedence level may exercise preemption privileges over those assigned a lower level.

Four-wire station sets are available for use in AUTOVON. The TOUCH-TONE feature should be provided in order to permit precedence calling privileges. A rotary dial with an external TOUCH-TONE pad may be provided in cases where the rotary dial is required for local service terminating on the same instrument. Both two-wire local lines and four-wire lines may terminate on the set.

Transmission

The AUTOVON system is designed for satisfactory transmission over connections up to 12,000 miles in length.

Facilities. Four-wire line transmission facilities are specified for AUTOVON trunks, access lines, and subscriber lines. Carrier or microwave radio systems are used exclusively for trunks and where possible for access lines and subscriber lines in order to minimize delay and echo problems. Where voice-frequency cable facilities are required for access lines or subscriber lines, loading heavier than H44 should not be used.

Four-wire station equipment should be used for subscriber lines to minimize echo problems and to provide for alternate duplex data transmission. If two-wire station sets terminate subscriber lines, four-wire facilities should be used with a two-wire conversion hybrid at the station location. Such lines must be treated as access lines at the serving switching center in order to obtain proper echo-suppressor control.

Access lines should be four-wire with two-wire conversion at the PBX. If these lines are also used for data or other four-wire applications, they are called dual-use lines.

Loss. Overall connection losses, loss variations, and stability are controlled by designing all trunks for zero loss and by introducing fixed losses into the subscriber line and access line end links. The 1000-Hz design loss objective for subscriber lines is 0 dB; for access lines, it is 2.0 dB with 2-dB switchable pads, i.e., 2.0 + 2S dB. Station arrangements include pads to produce the appropriate transmitting and receiving level points for data or voice transmission.

Echo. Because of the mixture of two-wire stations (generally served by PBXs) and four-wire stations, the variety of service offerings in the network, and the global dimension of the network, echo control is of paramount importance. The use of net loss and return loss as a means of echo control is applicable only in those cases where return losses are very high, such as at four-wire stations, or where total echo-delay time is relatively short. In other cases, echo suppressors must be used.

The design loss of access lines is specified to ensure adequate stability margins and speech volumes on all calls as well as to provide proper echo control on access-line-to-access-line calls within the same switching center. Generally, echo control on connections involving one or more trunks and terminating at each end in two-wire PBXs is accomplished by the use of controlled split-type echo suppressors. For AUTOVON, echo suppressors are used with trunk terminations in four-wire No. 5 crossbar offices and with access line terminations in four-wire No. 1 ESS offices. Since the length of connections cannot be predicted, echo suppressors are always provided on two-wire terminated subscriber and access lines.

Controlled echo suppressors are normally in the disabled condition and are enabled as required by a relay operated by the switching

office trunk circuit. They are maintained in the disabled condition by switching machine logic for access-line-to-access-line connections made in ESS offices. Tone disabling is also provided to allow duplex data transmission.

Common Grade Plan. In AUTOVON, all network trunks are common grade with special conditioning applied as required to access lines and subscriber lines. The addition of fixed compromise equalization to specially conditioned access lines or subscriber lines equalizes the end-to-end connection to a satisfactory degree in nearly all cases. The common grade plan permits all trunks in the network to be designed, maintained, and utilized in a similar manner. This results in a smaller total number of trunks and also provides more flexibility and survivability than segregated trunk classes.

REFERENCES

1. Shaye, N. "A Better Way of Designing Tandem Tie Trunk Networks," *Bell Laboratories Record,* Vol. 55 (Sept. 1977), pp. 220-226.
2. American Telephone and Telegraph Company. *Telecommunications Transmission Engineering,* Volume 2, First Edition (Winston-Salem, N. C.: Western Electric Company, Inc., 1977), pp. 194-195.

Chapter 16

Private Line Channels

Private line telephone circuits designed to connect two stations over local and toll facilities are similar to a message network toll connection. The engineering considerations applicable to toll circuits and local plant generally are sufficient for designing private line telephone circuits. However, private line telephone service involving the connection of three or more stations so that each station may signal and communicate singly or collectively with all of the other stations is often requested. The engineering of such multistation private line telephone circuits involves specialized problems and complications which prevent the direct application of many of the accepted design procedures used for message network telephone circuits.

Some of the complications encountered in designing multistation private line circuits are derived from options such as type of station equipment, signalling arrangements, interconnection with other private line facilities or other types of communication facilities, access to remote locations, and the use of the voice channel for other than voice transmission.

In addition to the usual talking and signalling uses of private line telephone circuits, certain other uses are sometimes required and are furnished where tariffs provide for them. Some of these additional uses are: connection to private mobile radio systems, telemetering, remote control features (for controlling operation of radio transmitters or receivers, pipeline pumping stations, etc.), extension of alarm or power control circuits from unattended to attended locations, teletypewriter services, facsimile, interconnection of computers or high-speed data files with other computers or input/output devices,

wired music, remote studio to transmitter broadcast, and baseband video or television transmission.

There is no easy way to categorize and define such numerous possibilities as those offered by private line services. Perhaps the most exact, if not the most concise, method of classification is that offered by Federal Communications Commission (FCC) Tariff 260 which groups private line services on the basis of bandwidth and use.

In addition to bandwidth and service use, transmission characteristics required for satisfactory service must be taken into consideration. Furthermore, a choice of available facilities and special equipment must be made to meet transmission requirements and to satisfy signalling arrangements. Channels are commonly used for voice, voiceband data, wideband data, telegraph, and telephotograph transmission. Similar aspects of program and video services are covered in Chapter 17. The resolution of these basic considerations into a final decision for circuit layout ranges from a highly challenging problem to a very routine process.

16-1 PRIVATE LINE SERVICE CATEGORIES

During the middle 1960s, considerable effort was expended to modernize private line tariffs. Included were the consolidation of a number of tariffs and the restructuring of service descriptions. This work culminated in the establishment of FCC Tariff 260.

Service Elements

As part of the tariff simplification, private line services were categorized by type of channel and assigned a series of 4- or 5-digit numbers. Channel rates, for the most part, are based upon interexchange channel costs applied on a mileage basis. This mileage is the airline distance between appropriate rate centers; pricing is on a per mile per month basis with the rate generally decreasing with distance. Channel conditioning may be ordered on certain channels for various degrees of transmission quality. Alphanumeric codes, C1, C2, etc., define the degree of conditioning and establish limits on attenuation and delay distortion.

Each interexchange channel requires a terminating arrangement (frequently called a service terminal) which usually consists of the central office equipment, a local loop, and the station termination.

Some special services, such as television, may use a station termination located at the central office and a local channel to extend service to the customer premises.

Arrangements must be made for the provision of various items of station equipment in addition to those required by the service terminal. These include teletypewriter equipment, channel conditioning equipment, bridging arrangements, signalling arrangements, switching equipment, etc. In some cases, the station arrangements (e.g., key telephone sets) may be provided under local rather than FCC tariffs.

Service Descriptions

As previously mentioned, the various types of service offerings covered by Tariff 260 are divided into series of descriptions identified by 4- or 5-digit numbers each of which applies to one type of service as shown in Figure 16-1. Within each series are a number of more specific services fitting the general description.

The 1000 series includes a number of unconditioned channels capable of transmitting binary signals at rates up to 150 bauds. These channels may be furnished for half-duplex or duplex operation over 2-point or multipoint facility arrangements.

The 2000 series provides voice-grade private line service for voice and/or data or control signal transmission. Two-point or multipoint service is furnished on a half-duplex basis; 2-point service may also be duplex. While the channel bandwidth does not generally exceed the 300 to 3000 Hz band, channel types 2007 through 2010 provide a bandwidth of up to 50 kHz for secure U.S. government communications.

Channels in the 3000 series have an approximate bandwidth of 300 to 3000 Hz which is used for voiceband data transmission, remote metering, supervisory control, and miscellaneous signalling purposes. Two-point or multipoint service can be furnished on the basis of half-duplex or duplex operation. Special conditioning is available for these channels to improve their transmission characteristics.

Series 4000 channels are conditioned channels with a bandwidth not exceeding 4000 Hz furnished for 3-level data transmission or for telephotograph signals. Half-duplex and duplex services are provided

SERIES 1000 (SUBVOICE GRADE)	
1001	Transmission up to 30 bauds for remote metering, supervisory control, and miscellaneous signalling purposes.
1002	Transmission up to 55 bauds for teletypewriter, teletypesetter, data or remote metering, supervisory control and miscellaneous signalling purposes, or transmission up to 45 bauds for morse code transmission.
1003	Transmission up to 55 bauds for remote operation of radiotelegraph.
1005	Transmission up to 75 bauds for teletypewriter, teletypesetter, data or remote metering, supervisory control, and miscellaneous signalling purposes.
1006	Transmission up to 150 bauds for teletypewriter, foreign exchange teletypewriter, data or remote metering, supervisory control, and miscellaneous signalling purposes.

SERIES 2000 (VOICE GRADE)	
2001	Furnished for voice transmission and alternate data and may be provided on a duplex basis for a 2-point service. Special conditioning is available for data use.
2002	Provides for combined voice and control functions in connection with the remote operation of mobile radio telephone systems.
2003	Provides for the transmission of single-frequency tones in connection with remote operation of mobile radio telegraph systems.
2004	Furnished in connection with remote operation of a high-frequency point-to-point radio telephone system for the Office of Civil Defense.
2006	Used for foreign exchange service.
2007-2010 (cont)	Specially conditioned voice grade circuits to provide a bandwidth of up to 50 kHz. These channels are furnished wholly within the Washington metropolitan area to a department or agency of the U.S. Government and provide for secure communications.

Figure 16-1. Private line services defined in FCC Tariff 260.

SERIES 3000 (DATA TRANSMISSION)	
3001	Furnished for remote metering, supervisory control, and miscellaneous signalling purposes.
3002	Furnished for data transmission and may be used for facsimile.

SERIES 4000 (DATA TRANSMISSION)	
4001	Furnished for Schedule 5 (3-level) data transmission at rates of 1300 and 1600 bauds. Special conditioning is maintained on steady noise, impulse noise, envelope delay, and net loss. These channels are furnished primarily in connection with certain government services.
4002	For telephotograph transmission; especially adapted for the transmission of picture material between the frequencies of 1200 and 2600 Hertz.

SERIES 5000 (TELPAK)
See text.

SERIES 8800 (WIDEBAND)	
8801	Provides for a 20-kHz wideband data channel, a 40.8 kb/s wideband channel, or a 50 kb/s facsimile or data wideband channel.
8802	Provides an arrangement for a 50-kb/s switched foreign exchange service. It is expected that this service will be discontinued when DATA-PHONE switched digital service becomes viable.
8803	This service terminal provides for half-group (the equivalent of six voice channels) data channels. This includes a 19.2 kb/s data channel or a 29 to 44 kHz analog channel for facsimile service.

SERIES 10,000 (ENTRANCE FACILITIES)	
10,001	Provides circuits of approximate bandwidth of 300 to 3000 Hertz with transmission characteristics similar to those set for the Series 1000, 2000, and 3000 channels. The customer premises must be located 25 airline miles or less from the point at which the customer-provided communication channel is connected to the entrance facility. Rates are determined and filed on a case-by-case basis.

Note: 6000 and 7000 series channels are discussed in Chapter 17.

Figure 16-1 (cont). Private line services defined in FCC Tariff 260.

for 2-point or multipoint arrangements but, because the channels are conditioned, multipoint services are restricted in respect to the number of points that may be served.

The 5000 series of channels provides the base capacity for a variety of services which may be used for wideband or combinations of lower series channels. Two types of base capacity are available. The first, type 5700, provides a 240-kHz band, equivalent to 60 voice-grade channels. The second, type 5800, provides a band of about 1000 kHz, equivalent to 240 voice-grade channels. The two wideband base capacities may be divided into smaller bands by the use of appropriate service terminals. Three common arrangements are shown in the following table.

TYPE	EQUIVALENT VOICE CHANNELS	MAXIMUM SEQUENTIAL DATA RATE, kb/s
5701	12	50.0
5703	6	19.2
5751	60	230.4

The base capacity may also be used for individual channels of lesser capacity that are otherwise provided under lower series offerings. The corresponding designations in the 5000 series are numerically related to the lower series. For example, the equivalent of type 1001 is type 5101; similarly, 2001 is translated to 5201, 3001 to 5301, and 4001 to 5401. Provision is also made for interconnecting the lower series channels with the 5000 series channels.

A variety of wideband services may be provided by 8000-type channels. Interexchange channels of type 8800 provide a maximum bandwidth of 48 kHz suitable for high-speed data or facsimile transmission or for 50 kb/s switched foreign exchange service. They may also be used to derive individual voice-grade channels up to a maximum of twelve.

Certain channels specified by series 2000, 3000, and 4000 may be derived from 8000 series channels. These are the same as those that may be derived from series 5000 base capacity except that series 1000 channels may not be derived from series 8000 channels. Series 5000 channels may be extended with 8000-series channels.

Series 10,000 channels are entrance facilities used for extending customer-provided communications systems to the customer premises.

16-2 VOICE TRANSMISSION

Circuits that are common but not unique to private line voice services may be arranged as either two-wire or four-wire, with 2-point or multipoint station arrangements and with or without selective signalling. Special consideration must be given to the selection of facilities, bridging of multipoint circuits, and signalling.

The design process for a private line circuit may be initiated by preparing a preliminary layout of the circuit without detailed consideration of transmission and signalling. An approximate geographical layout along existing cable routes may suggest locations for bridging arrangements and may show the need for new construction. After design constraints have been identified, the initial layout is modified to take into account available facilities, equipment, and maintenance capability.

Selection of Facilities

The facilities for 2-point private line circuits may be two-wire where gain and stability requirements can be met; however, it is usually desirable to use four-wire arrangements for multipoint circuits. The extent to which two-wire facilities can be used depends on the number of stations served. The multiple singing and echo paths produced by several two-wire branches limits their use and, therefore, where a two-wire layout may be justified, for economic or other reasons, a detailed return loss analysis is necessary. Some two-wire branches may be used on multipoint circuits provided the layout is predominately four-wire. Some multipoint configurations involving large numbers of stations require complete four-wire design and may even include four-wire stations.

Multistation private line voice circuits are generally designed for conference service; i.e., any or all stations may be off-hook at the same time. Where a circuit is intended for nonconference service, it is not expected that more than two stations may be off-hook at any given time. Thus, nonconference type service may be more economical because more extensive use of two-wire facilities is possible.

Types of Facilities. The intercity facility portion of a private line voice circuit may be made up of any of the various standard types of carrier channels and any of the standard types of voice-frequency repeatered lines. The complex transmission and maintenance con-

siderations that are characteristic of multistation designs make it desirable to assign the best grades of plant available where there is a choice of facilities. A complex circuit involving numerous branches may require extensive use of voice-frequency facilities where bridging points do not coincide with the terminals of carrier systems on the route. It is advantageous from the standpoints of maintenance and service dependability to provide facilities that afford maximum freedom from service interruptions regardless of whether the facilities are exchange or toll grade, four-wire or two-wire, 2-point or multipoint.

Loop Repeaters. It is difficult to set maximum values for loop lengths or losses beyond which it is necessary to provide gain. For example, inherent losses on four-wire loops generally make a loop repeater necessary regardless of the loop length. Similarly, a two-wire loop connected or bridged to a four-wire circuit usually requires gain because of the hybrid loss. For two-wire loops with two-wire bridging arrangements, the loop lengths may be somewhat longer before repeaters are required because of the lower losses of two-wire bridges.

Transmission Plan

The transmission design of multipoint circuits is generally based on a 0-dB backbone route (center-of-bridge to center-of-bridge) with the allowable net loss assigned to the loops. The maximum net loss is 10 dB for circuits using two-wire stations and 16 dB for those using four-wire stations. The 6-dB difference allows for the hybrid losses of the two-wire station set. The transmission design for circuit layout purposes is typically based on 0 TLP at the station set and a +7 dB TLP at the receiving port of a bridge while still conforming to the standard −16 dB TLP at a transmitting carrier channel terminal.

The transmission plan for 2-point circuits is based on a maximum net loss of 10 dB between two-wire stations. The transmission design for circuit layout purposes is based on 0 TLP transmitting and −10 dB TLP receiving at the station while conforming to the standard transmission level points at carrier channel terminals.

In addition, TLPs at the outputs of repeaters feeding cable facilities must be restricted in order to limit interference with other circuits, usually resulting from near-end crosstalk paths. Minimum TLPs at cable line facilities connected to repeater inputs must also be considered so that the value of signal power is not too close to that of noise and crosstalk. Transmission level point considerations that

relate to the use of cable facilities are covered in more detail in a subsequent discussion of voiceband data transmission which provides guidelines that may also be applied to private line voice transmission.

Bridging Arrangements

Multipoint private line arrangements require the interconnection of various legs at a common bridging point. For the purpose of this discussion, each line or branch connection constitutes a leg of the bridge. Some multipoint arrangements utilize more than one bridging point. The complexity of a bridging point design depends on whether the circuits to be bridged are two-wire or four-wire, on the impedances of the interconnected circuits, and on the switching needs of the multipoint arrangement. In order to achieve transmission stability, all circuit appearances on the bridge must be properly terminated when not otherwise connected.

Two-Wire Bridges. There are several types of bridging arrangements suitable for two-wire layouts. Those most commonly used are the straight bridge type, the resistance type, and the pad type.

The Straight Bridge Arrangement. This arrangement, shown in Figure 16-2, is simpler, less costly, and has less loss than the other types. It is sometimes used where the higher loss of another type of bridge would necessitate a repeater. However, the straight bridge has some severe limitations which must be considered. A line or loop facility having serious irregularities (such as might be presented by a loop of complex makeup) when connected together directly through a straight bridge arrangement has a limiting effect upon the degree of balance obtainable across any repeater or hybrid connected to other bridge legs. Also, the calculated losses of the straight bridge arrangement assume 600-ohm terminations on all appearances. In actual use, these terminations are likely to vary appreciably from 600 ohms and, consequently, the real loss of the bridge arrangement may differ from the computed value. This suggests another limitation. If one of the bridge legs is exposed to a very low impedance or short circuit, all other legs are affected and the balance of an adjacent repeater may be so deteriorated as to subject the entire circuit to a singing condition. Where the backbone circuit is repeatered but the branch circuit is not, a 600-ohm pad of 5 dB or more should be inserted in the branch circuit adjacent to the bridge provided the loss of the branch circuit is low enough to permit it.

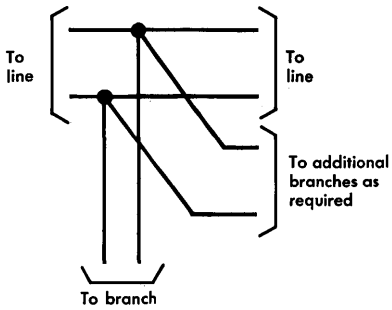

TOTAL NUMBER BRIDGE LEGS, n	INSERTION LOSS, dB
3	3.5
4	6.0
5	8.0
6	9.5

Figure 16-2. The straight bridge.

The insertion loss of the straight bridge arrangement, if all legs are terminated in the same value of impedance, can be computed from

$$\text{Insertion loss} = 20 \log \frac{n}{2} \quad \text{dB}$$

where n is the total number of legs. The losses of several arrangements commonly used are shown in Figure 16-2.

The Resistance Type Bridge. In this type bridge, illustrated in Figure 16-3, the loss is several dB greater than that in a straight bridge with the same number of legs; thus, the resistance type is generally used where repeaters are employed on the circuit branches. Where the additional loss is not governing, the resistance bridge is usually preferred to the straight bridge. While use of this bridge does not always improve the singing margin, trouble on one of the circuit branches is less likely to affect the other branches or the singing margin of the overall circuit.

The insertion loss of the resistance bridge with all legs properly terminated is

$$\text{Insertion loss} = 20 \log (n-1) \quad \text{dB}$$

where n is the total number of legs.

The value of R, the series resistors in Figure 16-3, can be determined from

$$R = \frac{R_T(n-2)}{2n} \quad \text{ohms}$$

where R_T is the nominal impedance of the bridge and n is the number of legs. The values of R and the corresponding insertion losses for several commonly used 600-ohm bridge arrangements are shown in Figure 16-3.

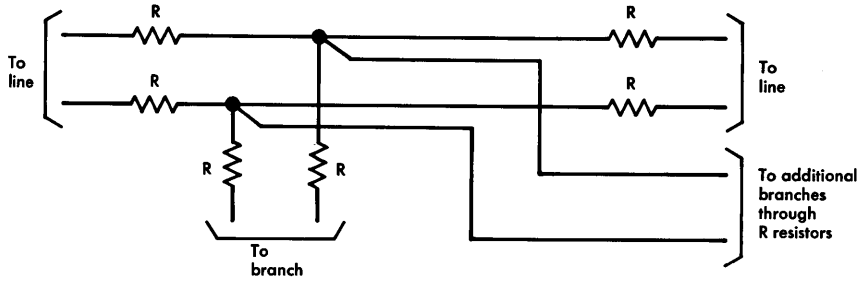

TOTAL NUMBER BRIDGE LEGS, n	R, ohms	INSERTION LOSS, dB
3	100	6.0
4	150	9.5
5	180	12.0
6	200	14.0

Figure 16-3. The resistance bridge.

The Pad Type Bridge. The uniformity of the impedances of all lines and branches can be improved by the use of a pad type bridge like that illustrated in Figure 16-4. Thus, singing margins may be increased and the effects of trouble in one circuit branch upon the other branches may be minimized; however, its relatively high loss generally limits its application to those cases where each branch is equipped with a repeater.

The loss of the pad type bridge between any two appearances, each equipped with a 5-dB pad, is obviously 10 dB plus the bridging loss of the remaining legs. Because of the use of 600-ohm pads, the remaining legs individually present an impedance approaching 600 ohms at the point of bridging. Hence, the bridging loss can be computed in the same manner as was done for the straight bridge arrangement, i.e.,

$$\text{Bridging loss} = 20 \log \frac{n}{2} \qquad \text{dB}$$

where n is the total number of legs. The loss between any two bridge appearances is then

$$\text{Insertion loss} = 10 + 20 \log \frac{n}{2} \qquad \text{dB.}$$

The insertion losses for several commonly used 600-ohm arrangements are given in Figure 16-4. A 5-dB pad in each leg is assumed.

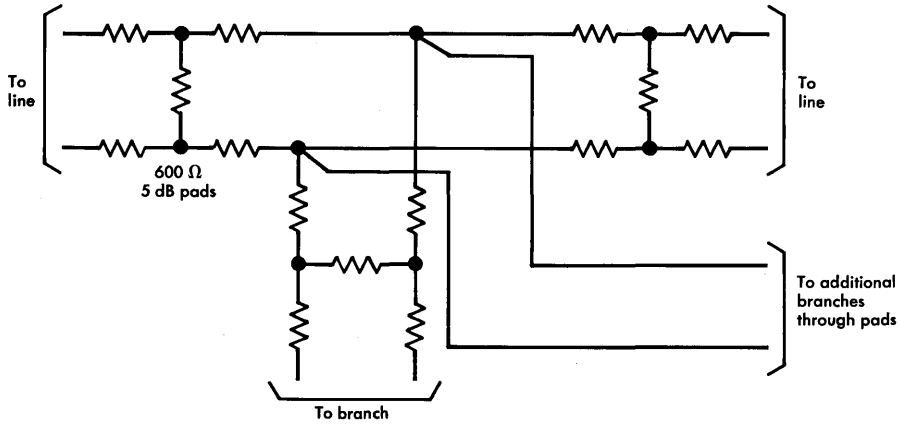

TOTAL NUMBER BRIDGE LEGS, n	INSERTION LOSS, dB
3	13.5
4	16.0
5	18.0
6	19.5

Figure 16-4. The pad bridge.

The Four-Wire Bridge. The 44-type bridge is a resistance network designed to interconnect four-wire lines. As shown in Figure 16-5, it consists of four sides, each having an input terminal and an output terminal. Within the bridge, there is a transmission path connecting each input terminal with the output terminals of the other three sides; thus, a total of 12 paths link the desired input and output terminals. These paths, however, also provide transmission paths between each bridge input and the other bridge inputs and between each bridge input and the output on the same side of the bridge. Generally, the paths between bridge inputs are of no importance but transmission paths between a bridge input terminal and the output terminal of the same side produce return currents on the four-wire circuit which might result in either singing or objectionable echo.

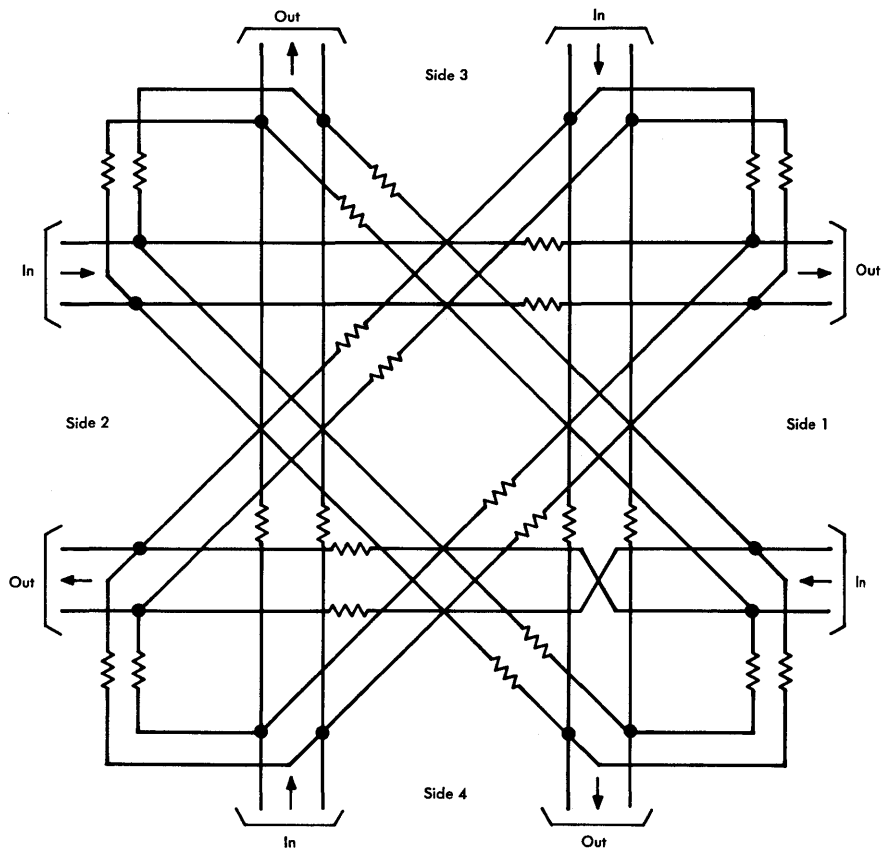

Figure 16-5. Schematic of 44-type bridge.

These return currents are controlled by the six individual paths from any input terminal to its corresponding output terminal. Each of the six paths consists of a direct path from the input terminal to the other three output terminals; from each of the three output terminals there are two paths in series back to the output terminal associated with the input terminal. Turnovers suitably located in the bridge network, as indicated in Figure 16-5, cause three of the six paths to be 180 degrees out of phase with the other three. Since these six transmission paths theoretically have the same loss, they cancel each other in pairs and the resulting loss between an input and its corresponding output is theoretically infinite. In practice, all of these

paths do not have identical losses because of manufacturing tolerances in the resistors and because of differences in the impedances of the lines or repeaters connected to the other three sides of the bridge; each line or repeater connection constitutes a shunt on any transmission path through that bridge terminal.

With all bridge terminals terminated in 600 ohms, the transmission loss between any input terminal and the output terminals of each of the other three sides is approximately 15 dB and the loss between any input terminal and the output terminal of the same side, assuming good balance, is in excess of 75 dB. For some combinations of imbalance, such as short circuiting or opening two or more terminals of the bridge, this loss may be reduced to as little as 38 dB.

The impedance of the bridge is about 650 ohms, with nominal terminations of 600 to 700 ohms. Since the bridge has a relatively high loss, its impedance does not vary greatly with various terminations.

Although the standard 44-type bridge is, for practical purposes, a symmetrical circuit when properly terminated, it is unsymmetrical with respect to reflected or return currents. Extraneous currents entering the bridge may be as much as 9.6 dB higher at output 4 than at any of the other outputs. For this reason, side 4 should either be assigned to a branch circuit or be left spare. On some critical service where a spare side might be used for rerouting or patching the main line circuit, it is preferable to assign side 4 to a branch and leave a different side spare.

Other bridges of similar design are employed for 6-way (46-type) and 8-way (48-type) bridging. These bridges have 20 dB and 23 dB loss between input and output terminals, respectively.

Talk-Back Features

Since the standard four-wire station arrangement has no connection between the transmitting and the receiving side of the circuit, no sidetone path is provided. In addition, communication is not possible between stations bridged together at the same location. It is necessary, therefore, to provide an external transmission path, called a talk-back path. This must be arranged so that it does not cause objectionable echo or return currents on the main circuit. Where talk-back is inserted at a central office, it must not be separated from the station by

facilities having appreciable time delay since this would cause the talk-back to sound like echo rather than sidetone. Talk-back is generally provided at a bridging point or as part of the four-wire station arrangement. This function may be accomplished by the use of a talk-back amplifier, a resistance type talk-back bridge, or an arrangement which uses the spare side of a four-wire bridge.

Talk-Back Amplifier. One method, shown in Figure 16-6, makes use of an amplifier to interconnect the transmitting and receiving sides of the branch. With this arrangement, there is no transmission from C to B since the amplifier is a one-way device. In each of the two main transmission paths, A to B and C to D, there is a loss of about 3.5 dB due to the bridging effects. Thus, the gain of the talk-back path from A to D is the gain of the amplifier less 7.0 dB. In general, the amplifier gain is set so that the transmission from the station talker to his own receiver and other receivers at the same location is equivalent to transmission from distant talkers.

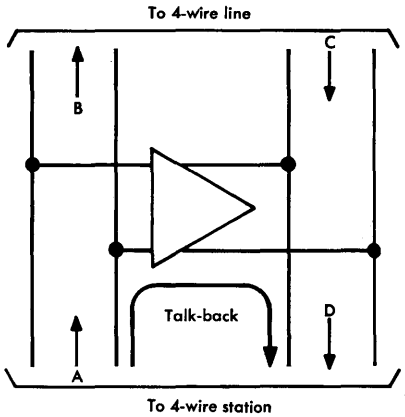

Figure 16-6. Talk-back amplifier.

Resistance Talk-Back Bridge. A second method of obtaining talk-back is shown in Figure 16-7. This arrangement consists of a resistance network inserted in the four-wire branch. Talk-back bridges cannot be used unless a repeater is associated permanently with the branch since the loss would be too great for satisfactory talk-back, even though the loop losses were 0 dB. Since this bridge is a 2-way device, the main circuit as well as the branch is subjected to feedback in the form of echo. A talk-back bridge having 21 dB loss is usually provided for circuits using 44-type bridges. The talk-back signals transmitted into the bridge are then 36 dB below the normal signals due to the 15-dB loss in the 44-type bridge. This amount of feedback or echo on the main circuit is not objectionable for most voice applications; however, on large multistation networks, especially those with 2-tone signalling, it is generally desirable to keep the number of resistance talk-back bridges to a minimum and use talk-back amplifiers whenever possible.

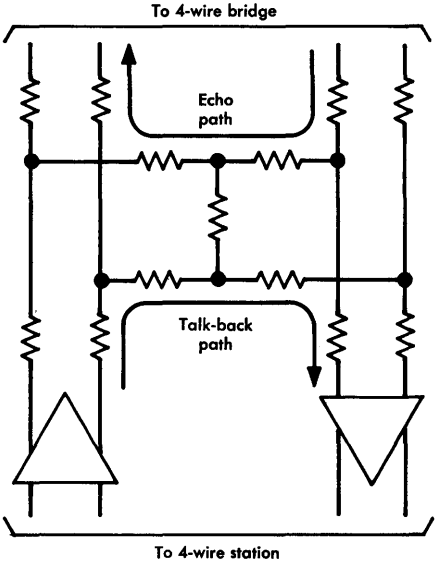

Figure 16-7. Resistance talk-back bridge.

Talk-Back by Spare Side of Four-Wire Bridge. A third talk-back arrangement is indicated in Figure 16-8, in which advantage is taken of the spare side of a 44-type bridge. The same arrangement can be used with a 46-type bridge. The transmitting side of the branch is connected to the input terminals of side 4 of the bridge, the receiving side of the branch is connected to the output terminals of side 3 of the bridge, and the unused terminals are terminated in 600 ohm resistors. In this way, signals from the branch are returned through the 44-type bridge at the same magnitude as they are fed to the main line section of the circuit. Therefore, if the bridge is lined up for equal transmission in all branches connected to the bridge, the talk-back transmission is equal to the direct transmission. With this arrangement, no additional echo paths are introduced.

Switching Arrangements

Arrangements are available for switching multistation private line telephone circuits bridged at the same location. Switching operations are accomplished by four-wire relays using four-wire bridges as interconnecting devices. Relay operation is controlled by one or more private line stations using dc channels between the central office and

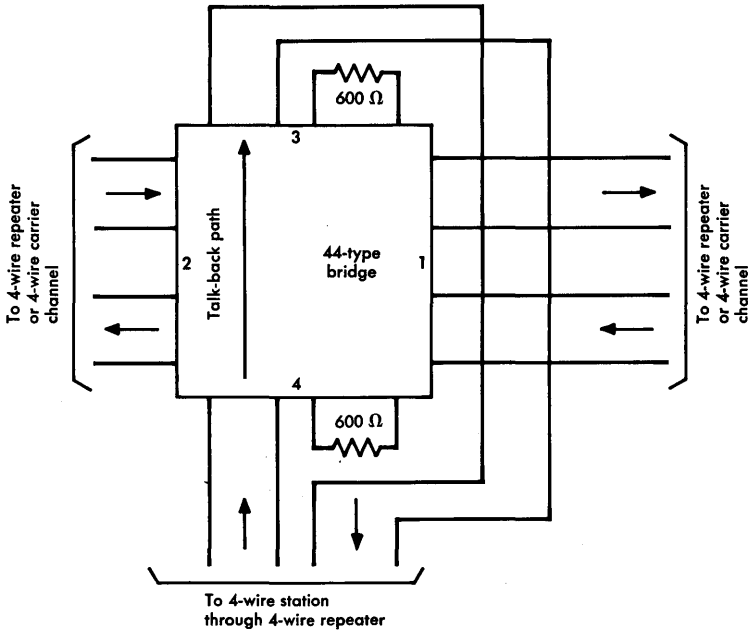

Figure 16-8. Talk-back obtained from spare side of 44-type bridge.

a station or by various selective signalling systems. From a transmission standpoint, a switching arrangement is similar to a plain bridging arrangement since, in the switched condition, two or more circuits are interconnected and appear as one circuit to the bridge. In the nonswitched condition, the circuits appear as terminal circuits.

Station Features

Private line telephone circuits usually terminate in a station set, a PBX, or key equipment. The equipment at a customer location is either common equipment or station equipment. The common equipment is the private line circuit termination that is common to all stations at the customer location. The station equipment is the instrument, induction coil, etc., that is furnished at each station. Circuits are available for use with both two-wire and four-wire loops with numerous wiring options such as local or common battery supply, idle circuit termination or loudspeaker, bridged station extensions, headset jacks, alternate use transfer key, loop-back testing, station level control, talk-back, and various signalling arrangements.

One type of common equipment used for terminating a four-wire loop, referred to as a four-wire termination, is shown in Figure 16-9. It consists of loop transformers (A and B), amplifiers or pads (C and D), station transformers (E and F), a loop-back path (G), and a talk-back amplifier (H). The loop transformers are selected to match the loop impedance to the nominal 600-ohm impedance of the station equipment. Connections to the loop side of the transformers provide dc control channels as required. The station transformers are used so that the four-wire loop may serve more than one station. One arrangement, commonly used, has a fixed impedance ratio that presents a low-impedance termination to the station sets. With this arrangement, the loss due to impedance mismatch decreases as the bridging loss increases, thus providing a more uniform station loss for the various number of stations that might be bridged. Some arrangements use autotransformers. The autotransformer tap selected to compensate for the impedance mismatch that would otherwise result is determined by the number of multipled stations.

Loop-back is an arrangement used on a four-wire facility to interconnect the transmitting pair with the receiving pair for the purpose of remotely testing the facility. Loop-back is provided either at a point where the TLPs of the transmitting and receiving pairs are equal or a pad is provided with loss equal to the difference in TLPs. Loop-back control is by dc or tone on the loop.

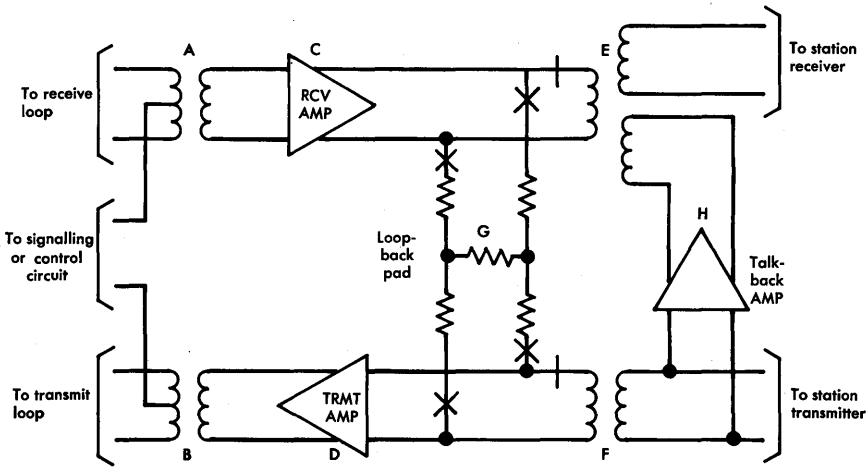

Figure 16-9. Four-wire station termination.

Signalling Systems and Associated Arrangements

There are many types of signalling that can be applied to a multistation private line circuit; the choice depends largely on customer needs. These may vary from no signalling (or signalling in one direction between only a few stations) to the extreme case in which a large number of stations may signal any of the other stations individually, collectively, or by preselected groups.

Loudspeaker Signalling. On many circuits, one station controls the operations of all of the other stations. A signalling system in common use for circuits operated in this manner is a loudspeaker signalling system. All remote stations are equipped with a loudspeaker so that they can be paged. The control station can have a loudspeaker or can be signalled in some other manner. A station equipped with a loudspeaker can monitor the circuit without restricting personnel activities. However, the audible range of loudspeaker signalling is usually limited to the confines of a small area unless auxiliary speaker units are used. The efficiency of loudspeakers varies inversely with room noise. Furthermore, loudspeakers can easily be reduced in volume or turned off and forgotten.

Two-Tone Selective Signalling. In two-tone signalling systems, pulses of 600 and 1500 Hz are simultaneously transmitted by the operation of standard telephone dials. Each station, PBX, or key equipment position is equipped to receive a signal when one or more codes are dialed. When group and/or master codes are used, the dialing of a single code signals several stations. The dialing of an assigned code by any station on the private line circuit operates the signalling indicator at the station or stations dialed. Two-tone signalling has been replaced almost completely by the SS-1 and SS-3 signalling systems.

Manual Code Ringing. Manual code ringing employs devices at the stations that operate only during the time that a signal is being received. Twenty-hertz signalling is usually employed. Occasionally, instead of providing loops between the central office and the station, a four-wire carrier channel is used with one terminal located at the customer station. In this case, dc signalling is often used between the station equipment and the carrier terminal. The codes are normally assigned by the customer and consist of a combination of long and short signals.

While this system has advantages from a cost standpoint, it also has several disadvantages. For example, all stations receive all signals and careful attention is necessary in order to identify received codes. When loud horns, gongs, etc., are used, the receipt of unnecessary signals may be annoying. Also, improper manual signalling may result in the wrong station answering or in no station answering. Thus, manual code ringing is generally unsatisfactory on circuits having more than about 10 stations.

Ringdown Signalling. The station equipment for ringdown signalling is usually arranged to lock in on the first signal received. With locked-in signalling, the signal at the station continues until the call is answered unless a time-out feature is provided. Ringdown signalling is applied at the customer premises and is not transmitted over the loop. It has its widest application on 2-point circuits and on multistation circuits where one station is equipped to receive ringdown signalling and all others employ loudspeaker signalling.

Code Selective Signalling. The station circuits for ringdown signalling are also used for code selective signalling; the required selector equipment is located at the central offices. On circuits with code selective signalling, each station is equipped with a ringing key and rings a designated code for the desired station. The selectors at the central office, one for each loop, count the rings; if the number of rings received matches the selector setting, a single 20-Hz ringing signal is applied to the customer loop. A signal is received at a particular location only when that location is called but there is no provision for selecting one station of a group of stations multipled on the same loop. While code selective signalling is considerably slower than SS-1 signalling, it is less costly.

Selective Signalling Systems. Selective signalling systems have been designed for both rotary dials (SS-1) and TOUCH-TONE pads (SS-3). The SS-1 system is capable of selectively signalling 81 individual stations. The 2-digit station codes are generated by dial pulsing. The digit 1 is used only to cancel an erroneously dialed first digit. The dial pulses are converted to frequency-shifted tone pulses for transmission over four-wire facilities. Single-frequency receivers convert the tones back into dc pulses. A decoder then counts, registers, and sends a momentary signal to the 2-digit corresponding code lead to operate station signalling circuits to signal only the called station.

The system is ready for dialing when the handset is removed from the switch hook or an equivalent action is performed by use of a key. However, before dialing, the station user must monitor the line to prevent interference with other users. If the system is in use, speech may be present or if the system has been arranged for privacy features, a tone is present. Conference calls are accomplished by dialing as many 2-digit codes as desired.

The SS-3 selective signalling system uses 3-digit TOUCH-TONE codes transmitted over four-wire multipoint private line facilities and may be arranged for up to 698 codes. A typical system may involve several different locations. Equipment at each location consists of TOUCH-TONE telephones, a TOUCH-TONE signal receiver, SS-3 signalling equipment, and four-wire line terminating circuits. Three-digit TOUCH-TONE coded signals are received at each location and converted into dc pulses compatible for use with the SS-3 control logic. Every code dialed is received by the decoding equipment at all locations. The SS-3 equipment at the location where a code has been assigned responds by placing a momentary ground on the code lead of the station circuit which results in the application of ringing current to the desired telephone set. In addition to station ringing, the code response from the SS-3 system may be used for any control application by providing auxiliary circuits.

16-3 VOICEBAND DATA TRANSMISSION

Private line data circuits may be designed for either 2-point or multipoint operation. Line design may be either two-wire or four-wire but four-wire design is preferred for multipoint service because of maintenance and return-loss considerations. Return loss normally limits the complexity and length of two-wire multipoint arrangements since it decreases with the number of points served and with deviations from the desired resistive terminating impedance of 600 ohms ± 10 percent across the 300 to 3000 Hz band. If more than 6 points are to be served, four-wire designs should be used. Another important factor that may be limiting in the design of multipoint services is noise, a mileage-dependent parameter.

If customer-provided equipment is involved, either two-wire or four-wire terminations may be specified subject to multipoint stability limitations; however, a request for four-wire terminations does not automatically mean four-wire design should be used. Half-duplex

service may be provided with either two-wire or four-wire facilities but duplex service requires four-wire facilities when the same frequency band is used for both directions of transmission.

A duplex channel may be used for simultaneous bidirectional transmission of two voiceband signals. A half-duplex channel may be used for transmission of one voiceband signal in either direction, but not simultaneously, or for transmission of two signals simultaneously, one in each direction, each using different and noninterfering portions of the voice bandwidth.

Bridging Arrangements for Multipoint Circuits

A standard multipoint split bridge is available for voiceband data services. Split (electrically independent) distribution and collection networks, shown in Figure 16-10, are used since the primary application is for four-wire data services between the main and multiple remote stations typically found in computer polling services. The physical design of the bridge assembly integrates the equipment and functions required at a bridge location (i.e., bridging, transmission parameter adjustment, circuit access, etc.) into a self-contained unit that minimizes cross-connections and centralizes mounting locations. The assembly includes standard VF amplifier and equalizer shelves and test access jacks. The resistive bridging networks are balanced, have 23 dB of loss at 1000 Hz, and have a characteristic impedance of 600 ohms. The bridge is designed to provide an interface with cable and/or carrier transmission facilities and has a constant loss, regardless of the number of ports in service.

As shown in Figure 16-10, standard +7 dB and −16 dB TLPs are provided within the bridge. Both in-service and out-of-service testing capabilities are provided; interlocked control of station loopback is included. While the bridge shelf accommodates equipment for 12 functional bridging ports, flexibility has been provided for both intrashelf and intershelf growth. The intrashelf flexibility enables easy configuration of the basic 12-port bridge shelf into either dual 6-port bridges or a single 12-port bridge. Cascading ports provide intershelf flexibility for the interconnection of more than one bridge without requiring circuit rearrangements. Plug-in components are required only for those ports of the bridge actually in service; the remaining ports are terminated with dummy plugs which connect built-in terminations.

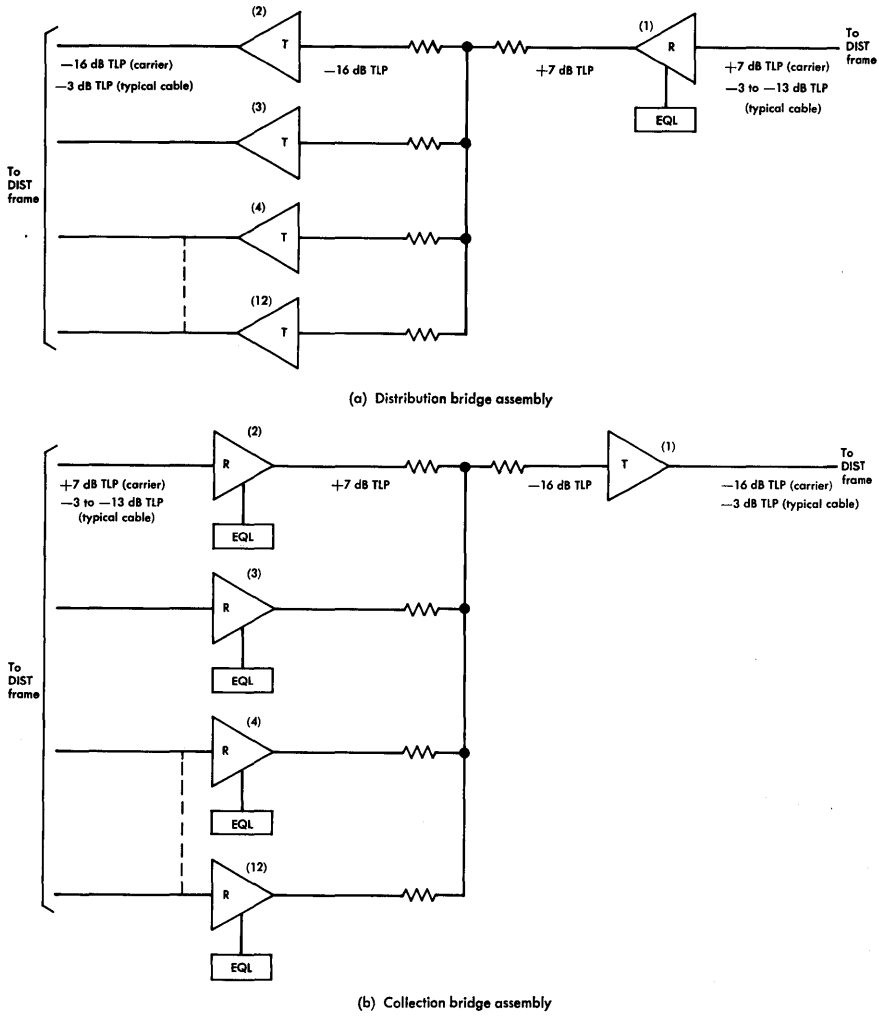

Figure 16-10. Functional block diagram of split-bridge assemblies.

Data Termination Arrangements

A method of connecting a four-wire data termination to a four-wire facility is shown in Figure 16-11. The channel terminating unit (data auxiliary set) provides equal-level loopback and switching arrangements for a voice coordinating channel when required. The terminating unit also provides equalization and amplification to compensate

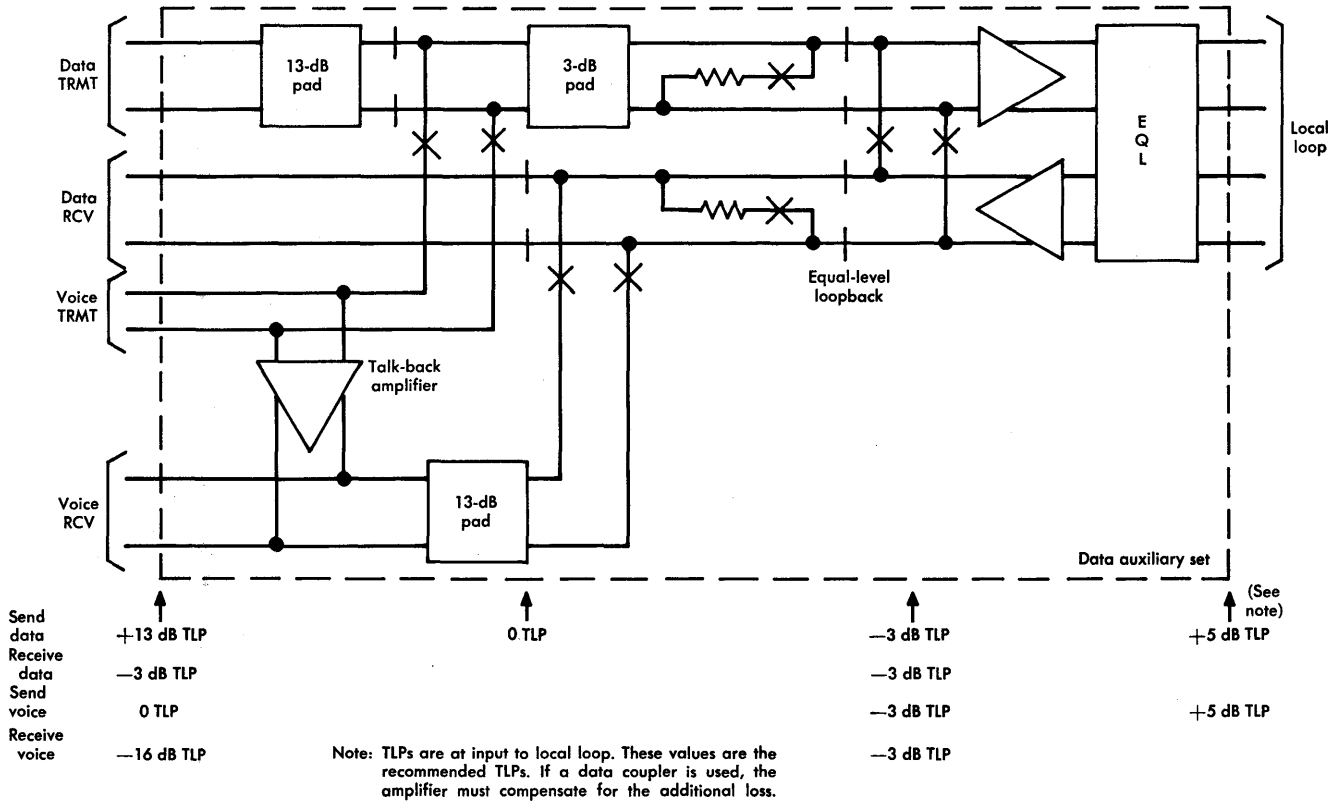

Figure 16-11. Four-wire facility to a four-wire data set and a four-wire telephone set.

for loss and to establish TLPs as shown. When the local loop is connected to a carrier channel at the central office, the +5 dB TLP at the output of the terminating unit and the —16 dB TLP at the input to the carrier channel require a combined loop and transmitting pad loss of 21 dB. Adjustment of the receiving amplifier in the terminating unit establishes the —3 dB TLP at the loopback point. At the data set, a transmitted signal power of 0 dBm is standard with an overall net loss of 16 dB. The losses of any coupling devices must be included in the overall net loss. Channel terminating units can also provide two-wire terminations for four-wire facilities. Except for a two-wire termination (hybrid) and the use of a different TLP, the arrangement is similar to the one described.

Transmission Plan

Private line data channels share facilities with circuits that provide message network service; therefore, the design of the data channels must make them compatible with satisfactory operation of the shared facilities. Many of the related design criteria covered elsewhere are summarized and some additional criteria are given to illustrate how the private line design considerations may in some cases supplement message network considerations [1].

The most critical design parameters involved in providing satisfactory private line service without adversely affecting the message network are the specification of transmission level points and the application of signal power limits in terms of these level points. The establishment of these two design parameters provides protection of the message network from excessive crosstalk and from carrier system overload.

To be consistent with message operations, a data private line circuit is designed to have a —16 dB TLP at the input to carrier system channel banks. The standard carrier system design then results in a +7 dB TLP at the output of the channel banks. Several other TLPs are also defined. For example, on channels that are used alternatively for voice or data, the connection of the telephone station set to the line is generally defined (for the transmitting direction) as a 0 TLP. Some variations are permissible to accommodate channel terminating unit design restrictions provided signal power restrictions are not exceeded.

The data signal power is specified as not exceeding an average of —13 dBm0 in a voiceband channel over any 3-second interval in order to meet carrier system overload criteria. The peak voltage in the signal should not exceed the peak voltage equivalent to a +3 dBm0 sinusoid no matter how short a time the peak exists. The power of the data signal (3-second average) is typically 0 dBm at the output of the data set or other terminal equipment. This point is regarded as the interface between the terminal equipment and the channel; pads, amplifiers, equalizers, etc., are considered to be part of the channel. Thus, with the TLPs shown in Figure 16-11 and with the specified maximum signal power, a —13 dBm0 signal is realized.

Private line data channels are designed for a circuit net loss of 16 dB. The loss must be allocated in a way that satisfies signal power, TLP, and noise objectives. For example, in order that the signal-to-noise ratio is not excessively degraded, data channels which utilize voice-frequency cable facilities should be limited to a maximum of 12-dB loss in a continuous, nonrepeatered section of cable.

A +5 dB TLP is recommended at the input to a cable facility for voiceband private-line data circuits. The maximum allowable value is a +7 dB TLP and the minimum is a —3 dB TLP. These values were established to limit signal power differences in order to control crosstalk between circuits using the same facility. The +5 dB TLP produces a private line signal power that corresponds closely to the signal power applied to the average length DATA-PHONE loop. Thus, crosstalk between private line and DATA-PHONE signals tends to be equalized.

The maximum value was selected as a +7 dB TLP to be compatible with the +7 dB TLP at a carrier system output and to avoid crosstalk problems that might result from higher values. The minimum value of —3 dB, combined with the maximum recommended repeater section loss of 12 dB, is generally consistent with the —15 dB TLP recommended as the minimum input to a VF repeater. The range of —3 dB to +7 dB allows flexibility in the design of these circuits.

Some departure from the established guidelines regarding TLPs and signal power are permissible provided network protection criteria are not violated. Care must also be exercised in these exceptional cases so that equal-level points can be established for loopback.

Impairments

There are several types of impairment that must be controlled in order to meet transmission objectives for a private line channel. Most data signal impairments are the same or similar to those affecting voice signals; however, there are some (such as impulse noise, delay distortion, and phase jitter) that have a more critical effect on the data signals and there are others that have different effects on the two signals. These impairments and the applicable objectives are reviewed here as they relate to private line data transmission [1].

Impulse Noise. The data signal error rate is seriously affected by impulse noise of sufficient magnitude and frequency of occurrence. As with other impairments, the susceptibility of data signals to impulse noise varies with the transmission rate and with the type of modulation. Impulse noise objectives and their allocations to facilities and links on multipoint private line data channels are given in Figure 16-12.

FACILITY	IMPULSE NOISE THRESHOLD, dBrnc0
Overall (see note)	71
Local loop	59
Voice-frequency trunk facility	54
Compandored facility (N carrier)	67
Noncompandored facility (except N carrier)	
0-125 miles	58
126-1000 miles	59
1001-2000 miles	61
>2000 miles	64
(Noncompandored N-carrier facility: 2-dB higher for each length)	
Two compandored facilities in tandem	69
T1 line equipped with D1 bank	66
End link (multipoint circuits)	67
Middle link (multipoint circuits)	(See mileage limits above)

Note: With a −13 dBm0 holding tone.

Figure 16-12. Overall, link, and facility impulse noise objectives.

The impulse noise objective is specified in terms of the rate of occurrence of the impulse voltages above a specified magnitude. The objective is expressed as the threshold in dBrnc0 at which no more than 15 impulses in 15 minutes are measured by an impulse counter with a maximum counting rate of 7 counts per second. The overall objective of 71 dBrnc0 implies a 6-dB signal-to-impulse noise threshold ratio in the presence of a —13 dBm0 signal.

Message Circuit Noise. There are two general message circuit noise limits for private line voiceband data channels. As shown in Figure 16-13, message circuit noise is related to circuit facility length in miles and is a measure of idle circuit random noise in dBrnc0. The C-notched noise (a term derived from the method of measurement) is the measure of noise on a channel when a signal is present. A single-frequency holding tone is applied to the line as a signal; this tone operates compandors and other signal dependent devices. At the receiving end, the tone is removed by a very narrow band-elimination filter (notch filter) and the noise is measured through a C-message filter. The maximum C-notched noise limit of 53 dBrnc0 is based on a 24-dB signal-to-C-notched noise ratio in the presence of a —13 dBm0 signal. The mileage-dependent limits for message circuit noise are facility maintenance limits; noise in excess of these limits indicates a trouble condition on channel facilities.

FACILITY LENGTH, miles	C-MESSAGE NOISE, dBrnc0
0- 50	31
51- 100	34
101- 400	37
401-1000	41
1001-1500	43
1501-2500	45
2501-4000	47
Satellite channel	44 (See note)

Note: Added to landline measurement on a power basis to obtain overall circuit limit.

Figure 16-13. Message circuit noise limits.

Single-Frequency Interference. There are many sources of this type of interference which may appear on channels in the form of unwanted steady single-frequency interferences. Occasional bursts of low-amplitude signals that may occur from crosstalk of multifrequency

signalling, for example, are not included in this category. The requirement for this type of interference is that, when measured through a C-message filter, it must be at least 3 dB below C-message noise limits.

Attenuation and Delay Distortion. It may be necessary to control attenuation/frequency and envelope delay/frequency characteristics of a channel to permit satisfactory data signal transmission. However, if the data rate is low and the distance of transmission is short, the channel may sometimes be used without corrective treatment. Attenuation and delay distortion may be corrected (channel conditioning) by the use of equalizers when requirements can not otherwise be met by available facilities.

The attenuation/frequency requirement specifies the allowable deviations of the attenuation characteristic over a given frequency range. There is no provision for the transmission of dc components. The allowable deviations and frequency ranges vary with the grade of channel conditioning; the deviation limits become narrower and/or the frequency range wider as the better (higher numbered) grades of conditioning are provided. The allowable deviation is specified as the difference in loss between that measured at a specified frequency and that measured at 1000 Hz.

In a manner similar to that applied to the attenuation/frequency characteristic, the allowable envelope delay distortion (EDD) becomes smaller and/or the frequency range wider for progressively better grades of channel conditioning. The overall envelope delay distortion limits are specified in terms of the difference between the maximum and minimum envelope delay within a frequency band.

The basic requirements for voice-grade data circuits and the requirements for conditioned data circuits are given in Figure 16-14. The C1 and C2 grades of conditioning are restricted to a maximum of four midlinks on multipoint arrangements. Grade C4 conditioning is restricted for use on 2-, 3-, or 4-point circuits and C5 conditioning is restricted to 2-point circuits.

Attenuation and delay distortion is usually corrected by the use of individual plug-in type equalizers at points on the circuit normally requiring VF amplification, such as bridge and station terminations. Various types of attenuation distortion equalizers are available for specific applications. Fixed equalizers are generally used to compensate for distortion introduced by voice-frequency cable facilities;

FREQ BAND, Hz	ATTEN*, dB
BASIC REQUIREMENTS	
500 to 2500	−2 to +8
300 to 3000	−3 to +12
C1 CONDITIONING	
1000 to 2400	−1 to +3
300 to 2700	−2 to +6
2700 to 3000	−3 to +12
C2 CONDITIONING	
500 to 2800	−1 to +3
300 to 3000	−2 to +6
C4 CONDITIONING	
500 to 3000	−2 to +3
300 to 3200	−2 to +6
C5 CONDITIONING	
500 to 2800	−0.5 to +1.5
300 to 3000	−3 to +3

*Relative to 1000 Hz.

(a) Attenuation distortion

FREQ BAND, Hz	EDD*, μS
BASIC REQUIREMENTS	
C1 CONDITIONING	
800 to 2600	1750
1000 to 2400	1000
800 to 2600	1750
C2 CONDITIONING	
1000 to 2600	500
600 to 2600	1500
500 to 2800	3000
C4 CONDITIONING	
1000 to 2600	300
800 to 2800	500
600 to 3000	1500
500 to 3000	3000
C5 CONDITIONING	
1000 to 2600	100
600 to 2600	300
500 to 2800	600

*Max. inband envelope delay difference.

(b) Envelope delay distortion

Figure 16-14. Requirements for 2-point or multipoint channels.

adjustable equalizers may be used to correct for slope or excessive distortion at band edges. Other types of attenuation distortion equalizers may be necessary to compensate for excessive midband ripple. Individual plug-in equalizers are also available for delay distortion correction.

The attenuation and delay distortion of a circuit should be measured and adjusted at the customer station (−3 dB TLP) after the 1000-Hz loss measurement. Delay distortion measurements are made after the attenuation distortion has been brought within limits. If a protective arrangement is required, all transmission measurements from the station must be made through the protective arrangement and overall objectives should be met in the appropriate direction of transmission.

Absolute Delay. A requirement for this parameter is not specified; however, absolute delay may prevent systems which use a retransmission scheme for error control from transmitting information at the maximum data transfer rates (throughput) specified for the data set. When satellite channels are used for data transmission, the absolute delay of several tenths of a second may cause problems of this nature.

Net Loss Variations. At installation, the channel should be lined up to within ±1 dB of the designed net loss at 1000 Hz. In operation, the net loss may vary up to ±4 dB (maintenance limits) from the design value. These variations are caused by daily and seasonal temperature changes and other phenomena that may affect carrier and physical facilities.

Singing Margin. When two-wire station equipment is used to terminate circuits which are provided, in part, over four-wire facilities, it is necessary to make singing margin tests. These tests take into account both the amount of return loss at the hybrid and the relative separation of the TLPs between the two directions of transmission on the two-wire side of the terminating set. For this reason, singing margin tests are a more accurate measure of the echo effect than echo return loss measurements.

Singing margin can be controlled by utilizing designs which provide proper balance of terminating sets and which (within bounds of other design rules) provide good numerical separation between the TLPs in the transmitting and receiving directions on the two-wire side of the terminating set. The TLP representing the direction of transmission from four-wire to two-wire should always be numerically lower than the TLP representing the direction of transmission from two-wire to four-wire. Singing margin is equal to the latter value minus the former value plus the return loss at the hybrid. Figure 16-15 shows two examples. In both cases, it is assumed that the hybrid is balanced well enough to produce a 10-dB return loss. However, in Figure 16-15(a), the singing margin is only 2 dB because of the values selected for the TLPs on the two-wire side of the terminating set. In Figure 16-15(b), the design is much improved and provides a singing margin of 26 dB.

Frequency Shift. Frequency shift in carrier channels is seldom a serious problem for data applications. It is insignificant on carrier

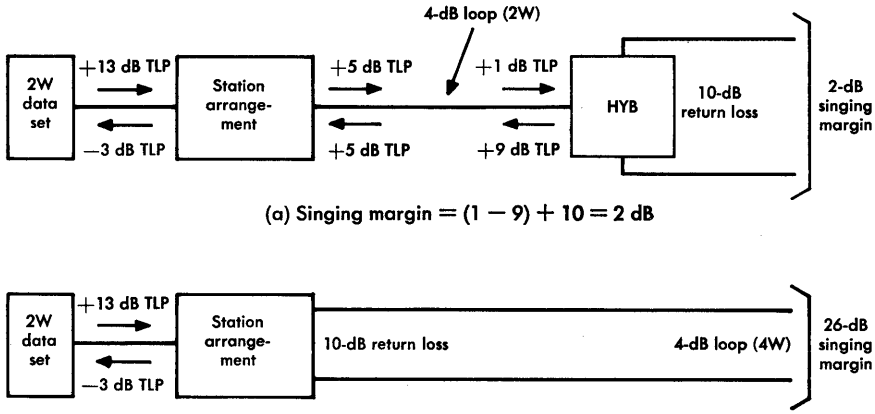

Figure 16-15. Examples of singing margin.

systems that have a transmitted carrier modulation scheme, such as N1, N2, or O carrier; it may be found on channels employing suppressed carrier transmission, such as N3 and L carrier, but is not found on T-carrier systems. The L-multiplex equipment is designed to limit frequency shift to well within the 5-Hz end-to-end limit specified.

Phase Jitter. Total phase jitter between customer stations should not exceed 10 degrees. The objective for phase-jitter distortion on tandem LMX facilities is 8 degrees maximum, peak-to-peak. Phase jitter requirements for short-haul carrier systems have been established; however, phase jitter on these systems is generally the result of noise or distortion and is not true jitter.

Nonlinear Distortion. Nonlinear (harmonic) distortion is that portion of a channel output which is a nonlinear function of the channel input. The D1A and D1B channel banks used on T1 carrier is one such source of harmonic distortion. The impairment results from fundamental nonlinearity and from the quantization process used in PCM systems. This type of distortion can be measured by transmitting a 704-Hz signal at −13 dBm0 and measuring the second and third harmonics at the receiving end of the channel with a frequency selective meter. If the second harmonic (1408 Hz) exceeds −38 dBm0 or if the third harmonic (2112 Hz) exceeds −43 dBm0, the cause should

be determined and the trouble cleared. Ordinarily, the performance of channel banks permits several to be operated in tandem without exceeding these requirements.

Although the single-frequency measuring method provides an adequate indication of the degree of nonlinear distortion for many transmission facilities, it has some drawbacks, particularly where PCM transmission systems are involved. As a result, a different technique has been developed. Narrow bands of Gaussian noise centered at two frequencies, A and B, are transmitted. Distortion products are measured using narrow bandpass filters centered at 2B—A, B—A, and A+B. The new technique provides less variable measurements for PCM systems and correlates better with higher speed voiceband data set performance.

Transients. Rapid gain and phase changes in transmission media degrade data signals. Such changes occur infrequently but might be produced by switching a carrier facility to a protection facility. The changes may be either of a transient nature with the gain or phase returning to its original value after a short time or of a long-term nature with the gain or phase remaining at the new value for a period of time. The seriousness of a given gain or phase change depends on the type of signal transmitted and the method of signal detection. Generally, 2-level signals are less affected than multilevel or multiphase signals. For a given type of signal, the amount of degradation introduced by a rapid gain or phase change depends on duration, rate of occurrence, and peak magnitude of the change.

A sudden change in received signal amplitude (greater than ±3 dB) having a duration of 4 to 32 milliseconds is defined as a gain hit. Amplitude hits of shorter duration than 4 milliseconds are considered impulse noise. A reduction of 12 dB or more in received signal power for a duration of at least 10 milliseconds is defined as a dropout. Maintenance limits on these impairments have recently been established. A sudden phase change of 20 degrees or more and in excess of 4 milliseconds duration is defined as a phase hit. The tenative limit for phase hits is a maximum of 10 hits in a 15-minute period.

A sudden increase in nonlinear distortion is called a harmonic hit. These may be caused by some types of signalling passed through a channel bank or by power supply transients. The compressor circuits provided with D1A or D1B channel banks of early design are particu-

larly susceptible to these transients. Since such hits may adversely affect the error rate for voice-channel data services at speeds greater than 2400 bps, a special compressor circuit has been developed for use in D1 banks providing these channels. This compressor is now furnished as standard with all D1 banks.

16-4 WIDEBAND DATA TRANSMISSION

The evolution of wideband services and the general transmission plan to meet the fast growing demand for high-speed data channels were based on the use of existing transmission facilities or those readily available for installation. While digital facilities are generally considered to be most suitable for transmitting digital data, the transmission plan must include, wherever possible, the use of the more readily available frequency division multiplexed analog systems.

Since many types and uses of wideband services are possible, transmission performance must be adequate for the most demanding types. However, the introduction of wideband services must not degrade the performance of other services sharing the same facilities. In addition to the transmission of high-speed data, provision must be made for required business machine coordination and control functions.

Services Accommodated on Analog Facilities

Two bandwidths were made available to conform to the previously given criteria for wideband service. These are 60 kHz and 240 kHz which correspond to the 12 and 60 voice-channel group and supergroup bands of the L-multiplex. The maximum synchronous serial data rates accommodated are 50.0 kb/s for the group band and 230.4 kb/s for the supergroup band. Service terminals were also made available to accommodate 19.2 kb/s data (half-group band). Each of these signals may also be transmitted over T-type digital transmission systems. In addition, point-to-point service can now be provided over digital facilities at 1.544 and 1.344 Mb/s.

Facility Types. The transmission media for most intercity connections are L-type repeatered coaxial cable, microwave radio, or combinations of both. A basic supergroup may be terminated in a wideband data modem, may be connected through to a similar supergroup, or may be terminated in group banks for further subdivision into 5 groups. A basic group may be terminated in a wideband data modem, may be

connected through to a similar group, or may be terminated in a channel bank for further subdivision into 12 voiceband channels.

Wideband modems are also available for use on short-haul carrier routes. The N-carrier wideband modem translates a 50 kb/s signal in the band 0.1 kHz to 38 kHz into a group band of the N-repeatered line along with two voice coordination channels. In the T-type carrier systems, several wideband banks (T1WBs) are available for translating standard wideband signals from up to eight group or two supergroup services into a T1 bipolar line signal [2].

A baseband (analog) repeatered system is also available to permit extension of wideband data services over ordinary pairs in telephone cables. These are used to span distances of up to about 10 miles from customer premises to the nearest central office that has access to long-haul facilities for wideband service. These repeaters, referred to as wideband loop repeaters, include adjustable equalizers to match repeater gain to cable attenuation and were developed especially for wideband data service [2].

Where signal processing for transmission over unlike facilities is necessarily different, connection between such facilities must be made at baseband frequencies. The wideband service bay functions as an access point for maintenance of wideband data systems wherever signals appear at baseband frequencies. The service bay also provides interconnection for carrier transmission systems and a means for extending baseband signals over repeatered and nonrepeatered cable pairs. Centralized patching and testing facilities provide convenient access during system alignment and maintenance of interconnected circuits. For like services, the wideband service bay serves as a common level point for both directions of transmission which facilitates link-by-link testing on a looped circuit basis. Where switching of wideband channels is required, the wideband service bay is the electrical interface for the switching equipment.

A voice-frequency channel accompanies the wideband channel in all service offerings to permit coordination and control of business machine operation by voice communication or by alternative use of a low-speed data set to handle automatic control signals. Also, alternate voice arrangements are offered as an optional service so that the customer may utilize the full voiceband capability of the wideband channel for regular private line telephone service when not transmitting data.

Transmission Requirements. The wideband line between a serving test center and a data station is called the station line and the portion between serving test centers is called an interoffice facility. Transmission requirements for 2-point service are generally specified for each of these links as opposed to overall end-to-end requirements. Where no interoffice facility is employed, the station lines on both sides of the serving test center are designed to meet station line requirements.

With switched wideband services such as DATA-PHONE 50®, the transmission requirements for noise, attenuation/frequency distortion, and delay distortion on the interoffice facilities are allocated to facilities to be switched in tandem. The total connection would then meet the same requirements as for a 2-point private line.

Wideband channels are generally lined up for 0 dB net loss end-to-end and 0 dB net loss between wideband service bays. The signal power at the output of the data set is typically 0 dBm. Transmitting and receiving points at the wideband service bay are 0 system level (SL) points for group-band services and —10 dB SLs for half-group services.

A typical layout of a group-band circuit is shown in Figure 16-16. The transmission requirements for group-band 2-point private lines are summarized in Figure 16-17. The requirements for half-group service are less stringent; supergroup requirements are more stringent. Attenuation/frequency and envelope delay distortion requirements are given in terms of relative slope, sag, and peak over the baseband frequency range. Figure 16-18 defines these values relative to a response curve which may be obtained from a series of single-frequency measurements or from the oscilloscope presentation of a gain and delay measuring set. While lining up a system by means of adjustable gain and delay equalizers, plots such as this are obtained to compare channel performance with the requirements of Figure 16-17.

Circuit Testing. Test equipment, specifically intended for testing wideband data circuits, is provided at the wideband data test bay adjacent to the wideband service bay. This equipment permits measurement of signal or test signal power, interference and distortion, signal-to-noise ratio, impulse noise, and the transmission characteristics of wideband local loop and carrier channels.

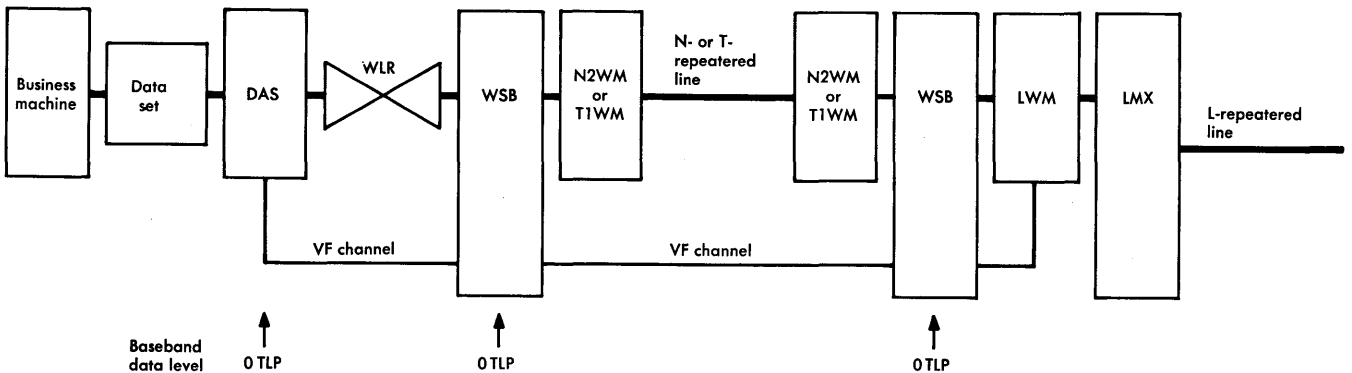

DAS = data auxiliary set
WLR = wideband loop repeater
WSB = wideband service bay
N2WM = N2 carrier wideband modem
T1WM = T1 carrier wideband modem
LWM = L-carrier wideband modem

Figure 16-16. Typical group-band data circuit layout.

MEASUREMENTS		INTER-EXCHANGE FACILITY	EACH STATION LINE
Envelope delay (μs)		Slope 9.0 Sag 12.0 Peak 10.0	Slope 0.5 Sag 3.5 Peak 6.5
Gain deviation (dB)		Slope 3.5 Sag 1.0 Peak 2.0	Slope 0.5 Sag 0.5 Peak 2.0
Noise at 0 TLP	Gaussian	64 dBrn	54 dBrn
	Impulse (85 dBrn threshold)	60 counts/ 30 minutes	110 counts/ 30 minutes
	Single-frequency interference	—30 dBm	—30 dBm
Digital error rate		6 errors/ 5 minutes	3 errors/ 5 minutes
Gain at 25 kHz		0 ±0.5 dB	0 ±1.0 dB

Figure 16-17. Transmission requirements for a 2-point private line group-band data circuit.

Trouble investigation is generally made by examining the eye pattern of a dotting sequence or a synchronous stream of random data at baseband frequency. The eye pattern method of circuit evaluation is not an absolute means of testing for circuit malfunction; rather, it is an additional aid in trouble detection and circuit analysis. Usually, transmission impairments, such as attenuation/frequency or delay impairments, cause regular closing of the eye while noise or phase hits cause occasional wild traces through the center of the eye.

Services Requiring Digital Facilities

DATA-PHONE digital services are now available for point-to-point duplex transmission of isochronous digital signals at rates of 1.544 Mb/s and 1.344 Mb/s [3]. Signals transmitted at 1.544 Mb/s must conform to certain constraints on format but signals transmitted at 1.344 Mb/s are unconstrained. These services are designed to meet stringent service objectives in respect to quality and availability. Standard digital transmission facilities are used to carry signals from customer premises to customer premises.

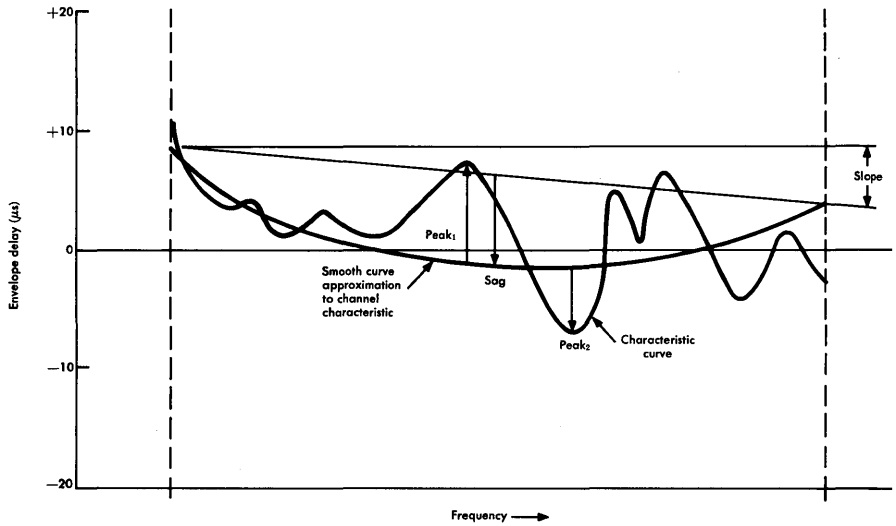

Figure 16-18. Slope, sag, and peak delay characteristics relative to a smooth curve.

Signal Format. The signal transmitted from and delivered to the customer equipment must be in a bipolar format. As transmitted over loop and trunk facilities, the signal must also conform to three format constraints. There must be at least three pulses in every sequence of 24 bit intervals, no more than 15 consecutive *0*s in the signal, and no more than 250 consecutive bit intervals carrying alternate *1*s and *0*s. When the customer signal is at the 1.544 Mb/s rate, it must conform to these constraints. When the customer signal is at the 1.344 Mb/s rate, the signal is processed by interface equipment, for transmission over loop and trunk facilities at the 1.544 Mb/s rate and the above constraints are also applied to this line signal. The processing includes the insertion of framing and stuffing pulses so that the transmitted signal conforms to the format requirements.

Service Objectives. Preliminary quality and availability objectives have been established for these services but must not be construed as minimum performance guarantees. The quality objective is to provide an average performance exceeding 95 percent error-free seconds. The second objective is to provide at least 99.7 percent channel availability, i.e., the fraction of time the channel is operative. Thus, an average outage of 0.3 percent is permissible but this value is the average observed over a period of several years.

Typical Channel Layouts. As shown in Figure 16-19, the channel layouts for 1.344 and 1.544 services are similar except for the use of a 306-type data set required in a 1.344 Mb/s channel. The local and interoffice digital facilities are most commonly provided by T1 digital systems but any facility capable of carrying one or more DS1 (1.544 Mb/s) signals may be used.

The 551A Channel Service Unit (CSU) is usually mounted at the customer premises but is regarded as part of the local digital facility. The CSU monitors input and output signals in the transmitting direction to ensure that signal format requirements are met. It contains a regenerative repeater, timing circuits, a bipolar violation remover, and maintenance circuits. A loopback arrangement permits remote testing from the central office.

For 1.344 Mb/s service, a 306-type data set must be used at the customer premises to transform the signal from 1.344 to 1.544 Mb/s (and 1.544 to 1.344 Mb/s at the receiver) for transmission over local and interoffice facilities [4]. The transformation involves the insertion of framing and stuffing pulses in the transmitting direction and smoothing (dejitterizing) of the data stream in the receiving direction.

16-5 TELEGRAPH DATA TRANSMISSION

Private line telegraph service may be provided as either a 2-point or a multipoint service. Multistation arrangements may include selective calling features and line concentrators in more sophisticated networks. The station equipment may consist of a teletypewriter arranged for any of the optional station features such as keyboard, printer, tape punch, and tape transmitter. The teletypewriter output is either a five-level or eight-level nonsynchronous digital signal with data speeds up to 150 bauds. Although networks may be engineered with higher speed teleprinters, this discussion is related to the 1000 series channels for typical 60-, 75-, 100-, or 150-word-per-minute machines. Transmission over a local loop is generally accomplished in one direction by converting the teletypewriter output to a frequency shift keyed (FSK) signal between 1070 Hz and 1270 Hz and, in the opposite direction, between 2025 Hz and 2225 Hz. Complementing data sets are used at each end of the connection.

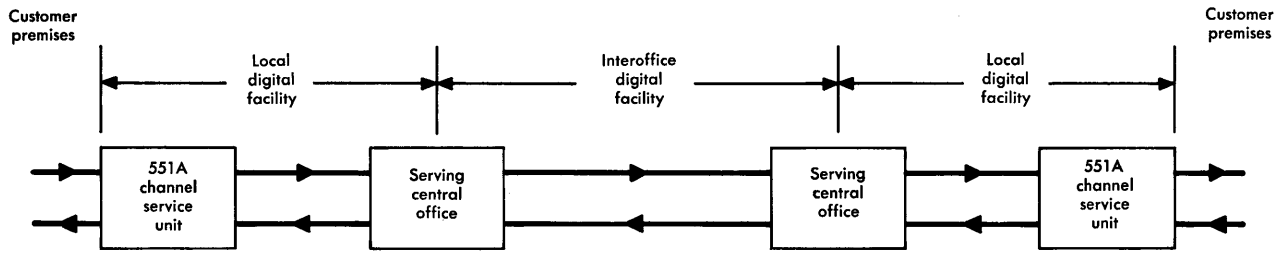

(a) 1.544 Mb/s digital channel

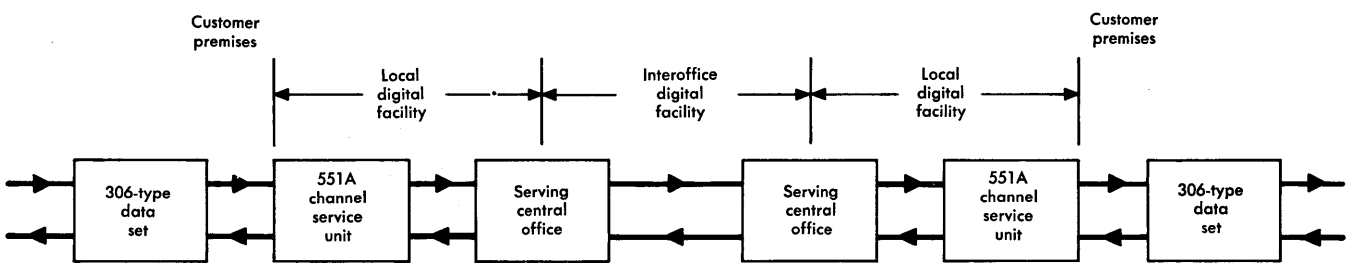

(b) 1.344 Mb/s digital channel

Figure 16-19. Typical channel layouts.

Large multistation networks may be built up at telegraph service offices. Data sets receive FSK signals from telegraph loops and convert the signals to marking and spacing signals of +60 and —30 volts, respectively. Telegraph loops may then be bridged at an electronic hub. As shown in Figure 16-20, amplitude adjustment is provided between transmitting and receiving hubs so that a variable number of loops can be bridged. The maximum number of loops that can be bridged before regenerative repeaters are required depends on a circuit coefficient system that has been set up as a measure of overall quality for individual circuits. Each piece of equipment and facility used on a circuit has been assigned a number that represents a figure of merit. The sum of these numbers between two ends of a circuit gives the overall circuit coefficient. A limiting coefficient of 10 represents the highest number which can provide good service. Any circuits that exceed this limiting coefficient either must be provided better facilities or a regenerative repeater must be included between the transmitting and receiving portions of the electronic hub.

Interoffice transmission may be provided most economically by a 43-type telegraph carrier system. This is an FDM system that can

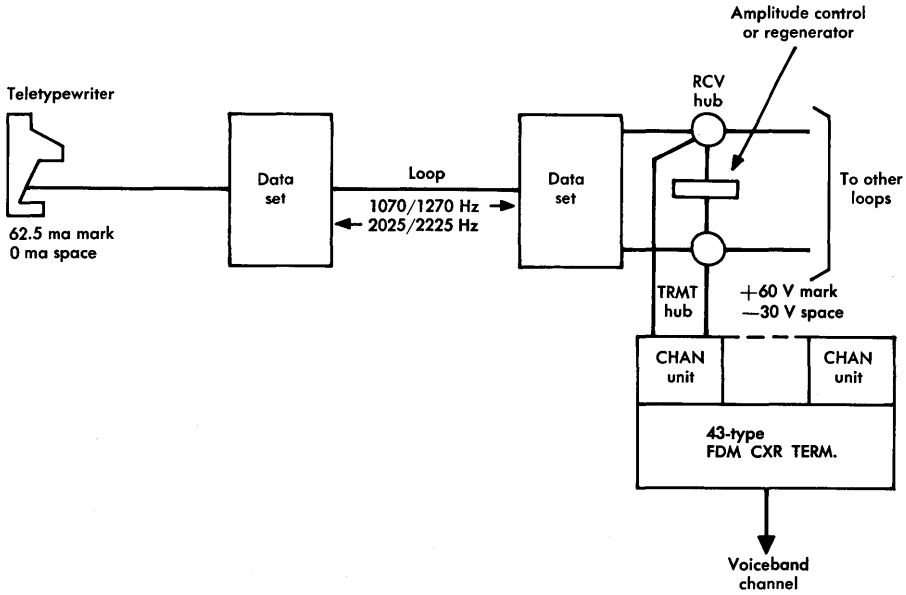

Figure 16-20. Partial layout of typical telegraph network.

combine up to six 150-baud channels with four 75-baud channels or can combine seventeen 75-baud channels on one four-wire voiceband channel. The FDM voiceband channel may then be combined with other voice-frequency channels on any of the standard carrier facilities.

Transmission Requirements

The transmission requirements for private line telegraph are consistent with those for unconditioned voiceband data service. However, transmission measurements are frequently referred to 2225 Hz instead of 1000 Hz, the reference frequency used in the telephone message network. This frequency, designated F2M, is the higher marking frequency in the baseband of the FSK signal. Telegraph signal impairment (distortion) is caused by attenuation/frequency distortion, envelope delay distortion, steady and impulse noise, frequency error between sending and receiving data sets, and listener echo. Distortion, as considered here, means the displacement of mark-to-space or space-to-mark transitions expressed as a percentage of nominal pulse width. The distortion objective is the maximum which the signal may encounter from the dc side of the transmitting data set to the dc side of the receiving data set and still provide satisfactory error performance. In general, the distortion should not exceed 27 percent. This assumes that the receiving teletypewriter can tolerate 35 percent distortion; thus, 8 percent is allowed for the sending teletypewriter. Error performance may be considered satisfactory at one character error in 10,000 characters transmitted.

Selective Calling Systems

Numerous selective calling systems have been designed for multipoint telegraph service. The choice of type and features depends on the complexity of the network and the application. In nonselective arrangements, all messages transmitted on the line are printed by all stations. News wire services employ large networks of this type but the arrangement may be unacceptable for other applications. Selective calling arrangements employ call-directing codes. The teletypewriters are equipped with electromechanical devices called stunt boxes arranged to respond automatically to particular codes or groups of codes. Versatile private line data communication arrangements are based on this feature.

A good example of a modern low-speed data selective calling arrangement is the 85A system. This system signals between a line control station, which is a customer-provided terminal, and a network of outlying stations. The line control station polls the individual stations in sequence and the outlying stations respond with indications of their traffic-to-send status. When a station is selected to send, it transmits to the line control station the addresses of those stations that have been designated to receive. The call-in process consists of the line control station determining if each of the selected receiving stations is ready to receive the message. When all the available addressed stations and an intercept station (if required) have responded, the sending station sends the text of the message. An end-of-transmission code at the end of the message causes the line control station to resume control of the line and proceed to poll the next station in the polling sequence.

16-6 TELEPHOTOGRAPH TRANSMISSION

Telephotograph is a process by which fixed graphic material such as charts, photographs, circuit diagrams, maps, and handwritten or typewritten copy is converted to electrical signals which are used either locally or remotely to record a likeness of the subject copy. In telephotograph reproduction, variations in density from black through shades of gray to white are converted to variations in the amplitude of an electrical current by a scanning process. These variations of current are transmitted to the recording device. The reduction of the original picture to elemental areas and the conversion into electrical current variations is accomplished by machines designed for this purpose. Telephotograph receiving machines reconstruct the picture from the electrical current variations by exposing a photographic film to a light beam which is intensity modulated according to the information received from the transmitting machine.

Usually, specially engineered circuits are used to transmit telephotograph signals. These circuits are derived from existing voice grade channels. The characteristics of normal voice facilities do not necessarily provide satisfactory telephotograph transmission, even though the bandpass requirements are similar. Envelope delay distortion, noise, intermodulation and harmonic distortion, amplifier gain stability, crosstalk, and echo are much more detrimental to telephotograph than to voice transmission.

The Telephotograph Signal

The output of the scanning photocell is amplitude modulated for transmission on private line voiceband channels. The type of amplitude modulation used, whether vestigial sideband or double sideband, is determined by telephotograph machine design which is based on bandwidth limitations. Most telephotograph machines use a carrier frequency between 1800 and 2400 Hz and require a passband in the range between 1200 and 2600 Hz. The actual bandwidth required for satisfactory transmission depends on the type of modulation and the limits imposed on distortion.

Transmission Considerations

In a telephotograph system carrier envelope, such as that illustrated in Figure 16-21, maximum carrier amplitude usually represents white, minimum carrier usually represents black, and amplitudes between minimum and maximum represent shades of gray. The minimum and

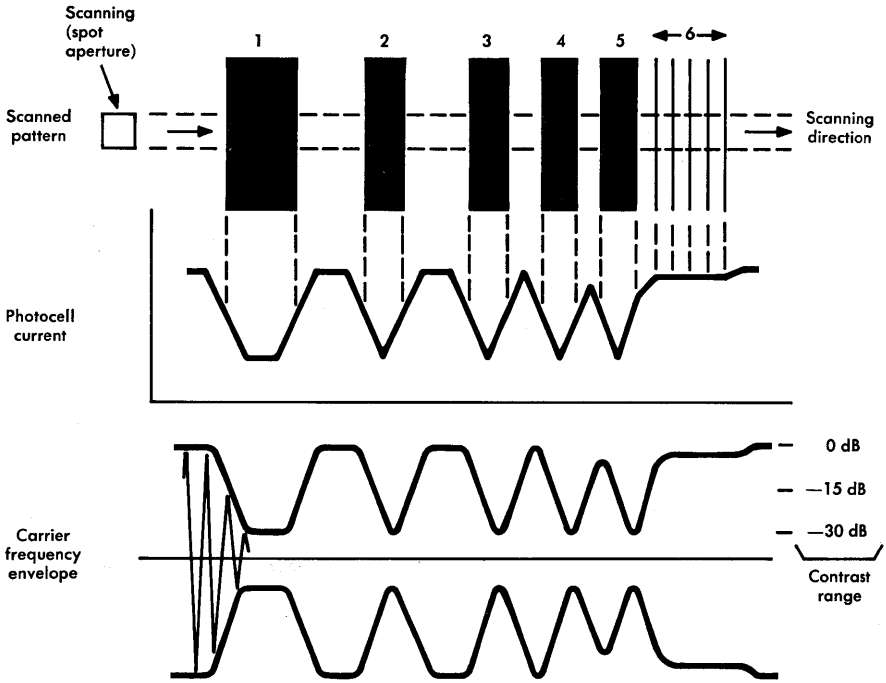

Figure 16-21. Carrier-frequency envelope of a band-limited telephotograph signal.

maximum conditions are reversed in some systems, i.e., maximum carrier represents black and minimum carrier represents white. The contrast range, which varies from 8 dB to 32 dB in various systems, is shown in Figure 16-21 as 30 dB.

Attenuation/Frequency Distortion. The amplitude characteristic in the 1200 to 2600 Hz band is of primary importance if the received picture is to contain a faithful reproduction of gray scale. For example, in Figure 16-21, assume that the scanning from bar 4 to bar 5 causes a 2000-Hz carrier to be modulated at a rate of 800 Hz and that bars 4 and 5 cause a decrease in carrier amplitude of 30 dB. A composite signal containing 1200 Hz (2000 Hz minus 800 Hz) would be transmitted. If the transmission facilities contained amplitude distortion so that this signal was received 20 dB below maximum amplitude, the reproduced bars would be a shade of gray instead of black. Therefore, if the facilities are to be used for the transmission of good quality telephotograph signals, the attenuation/frequency characteristic in the 1200- to 2600-Hz band must be uniform. In practice, the private line facilities which are leased for telephotograph transmission are equipped with adjustable equalizers and/or equalizing repeaters in order to provide a uniform attenuation/frequency characteristic.

Envelope Delay Distortion. For successful telephotograph transmission, the position of the various frequency components in the composite signal should reach the receiving terminal in the same time relationships as transmitted. If changes in these time relationships do occur, picture impairments result. In practice, delay equalizers are provided in necessary circuit locations to meet the delay distortion requirements of a particular system.

Message Circuit Noise. Telephotograph transmission is very susceptible to random noise interference, especially in the frequency band from 1200 Hz to 2600 Hz. Random noise registers in the received copy according to magnitude and the contrast range of a particular system. It appears as streaks or snow. Generally, random noise does not cause impairment if it is 45 dB or more below maximum picture signal in a system having a 30-dB contrast range.

Single-Frequency Interference. Another form of interference is an unwanted single frequency which may be due, for example, to a singing repeater, crosstalk, or cross-modulation involving single-frequency tones. If sufficient in amplitude, the interfering signal can modulate

the picture carrier and appear in the picture as a bar, herringbone, wood-grain or rope-like pattern.

Net Loss Variations. The net loss of a telephotograph channel must remain stable since changes cause the signals reaching the receiver to produce different shades of gray in the received picture than in the transmitted picture. In telephotograph systems which use a photographic process, a change in the order of 0.1 dB can be detected in the reproduced picture. Net loss variations can be classified as short-term and long-term. The short-term changes occur during the time required to scan and transmit a complete picture; long-term changes occur gradually in periods of hours or days. Short-term changes can be noticed in portions of a received picture as small as a part of one scanning line or in groups of scanning lines. A level compensator is sometimes used to reduce the effects of short-term variations. Long-term changes, commonly caused by seasonal temperature variations and deteriorating equipment, are controlled by proper maintenance practices.

REFERENCES

1. American Telephone and Telegraph Company. *Telecommunications Transmission Engineering,* Volume 1, Second Edition (Winston-Salem, N. C.: Western Electric Company, Inc., 1977), Chapters 17-21 and 26.
2. American Telephone and Telegraph Company. *Telecommunications Transmission Engineering,* Volume 2, First Edition (Winston-Salem, N. C.: Western Electric Company, Inc., 1977), Chapter 6.
3. Bell System Technical Reference PUB 41451, *1.544 Mbps Digital Service — Channel Interface Specifications (Including 1.344 Mbps Service Option),* (American Telephone and Telegraph Company, May 1977).
4. Bell System Technical Reference PUB 41304, *Wideband Data Set 306-Type Interface Specification,* (American Telephone and Telegraph Company, July 1971).

Chapter 17

Program and Video Channels

Audio program and video are two of the major private line channel categories in FCC Tariff 260. These channels provide a number of unique services and features that require designs of line and terminal equipment that must meet stringent transmission objectives. In some cases, where audio program transmission is involved, these designs are tailored to the specific needs of the services involved and, in other cases, the designs are adaptations of existing facilities.

The wide bandwidth required for video signal transmission has led to the provision of transmission facilities especially suited to this type of service. Some of these facilities involve the transmission of baseband video signals while others are used for the transmission and distribution of video signals in the radio-frequency bands by carrier techniques.

17-1 AUDIO PROGRAM CHANNELS

There are two general classifications of audio program channels, local and interexchange. Local program channels usually are comparatively short and require only local facilities. Most interexchange channels require the use of at least some toll facilities. Channels that require interoffice facilities but are not provided on toll facilities are considered to be local program circuits. A typical layout of program circuits is shown in Figure 17-1.

Circuits which may be routed partly in toll facilities are most frequently found in studio-to-transmitter circuits since the transmitters

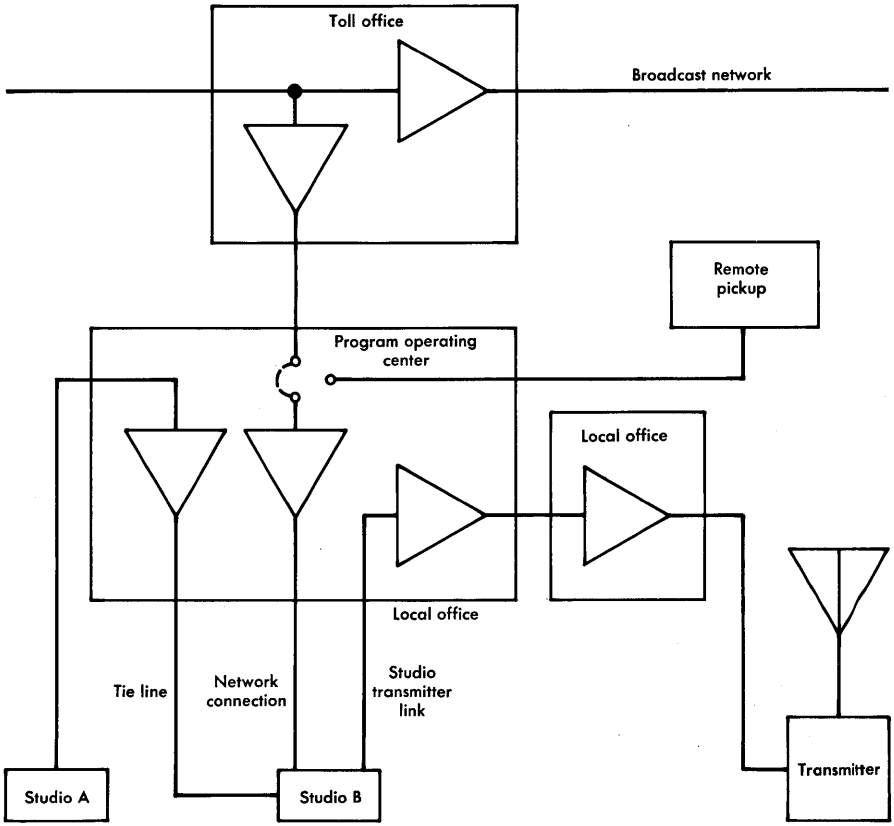

Figure 17-1. A typical layout of local program circuits.

may be as much as 35 to 40 miles distant from the studios. Other examples of this type of circuit may be found in the longer remote pickup circuits. These types of circuits are too short to be routed economically in regular toll program facilities. While they are too long to be handled as purely local circuits, they have certain characteristics in common with the shorter loops.

Local program circuits are furnished to AM and FM radio broadcast stations and to both commercial and educational television stations for the audio portions of the signals. Other subscribers may request equivalent nonbroadcast facilities such as those for "wired music."

Types of Circuits

Program services are classified as interstate because broadcasting is generally interstate; therefore, these services are covered under FCC tariffs rather than state tariffs. Tariff 260 defines the local program channels in two ways, Schedule F and studio transmitter links (STL). Schedule F includes program transmission channels within an exchange area: (1) between two stations, (2) between a station and the point of connection with an interexchange channel, (3) between a station and a telephone company central switching point, or (4) between a telephone company central switching point and the point of connection with an interexchange channel. The STL provides a program transmission channel which connects a broadcast studio and a transmitter site.

Interexchange program channels are also furnished under FCC Tariff 260. They are the series 6000 types, which distinguish service offerings by bandwidth and period of use. If the channel is used for a short period of time, occasional rates apply; if the installation is permanent, monthly rates apply. Tariff types are commonly referred to as "schedules." Figure 17-2 lists and describes the series 6000 channels. Transmission over these channels is usually unidirectional but arrangements can be made to reverse the direction.

Series 6000 interoffice channels may be connected: (1) at a central office with local channels and/or with other interoffice channels for the same or different customers, or (2) via telephone company local channels with a customer-provided audio channel at a studio or broadcast transmitter or a terminal of a customer-provided audio channel. Connections with the message network or other private line services are unsuitable for satisfactory transmission.

Overall Transmission Design

The first step in the design of a program circuit is to determine requirements. Some factors are the points of origin and termination, the type of equalization required, the service date, and any special arrangements. The type of broadcast service must be known in order to meet the proper noise, loss, and distortion requirements. A review should be made of available facilities to determine the need for new construction, loading, unloading, etc. Bridge taps and multiple appearances should be removed wherever possible to improve transmission and to protect service.

TYPE	MONTHLY	OCCASIONAL	FREQUENCY RANGE, Hz	SERVICE DESCRIPTION
6001 (Schedule E)		X	300-2500	Suitable for speech quality program transmision only; satisfactory only over limited distances.
6002 (Schedule D)		X	200-3500	Generally acceptable for speech quality program transmission; subject to use over limited distances.
6003 (Schedule C)	X		200-3500	Same as 6002.
6004* (Schedule B)		X	100-5000	Generally acceptable for music; provides for good quality speech program transmission.
6005* (Schedule A)	X		100-5000	Same as 6004.
6006 (Schedule BB)		X	50-8000	Provides for high fidelity music program transmission.
6007 (Schedule AA)	X		50-8000	Same as 6006.
6008 (Schedule BBB)		X	50-15,000	Provides for highest quality music program transmission.
6009 (Schedule AAA)	X		50-15,000	Same as 6008.

* Series 6004 and 6005 are the types most commonly used for network services.

Figure 17-2. Series 6000 audio broadcast channels.

When circuits are sectionalized by facility, the facility lengths should be short enough so that they can be readily equalized and so that good signal-to-noise ratios can be obtained. Consideration must also be given to the locations of amplifiers and their effect on the control of noise and distortion.

A tentative level diagram should be drawn and amplifier gains established. Suitable equipment may then be selected and the achievable noise performance can be determined. It may be necessary to make noise and crosstalk measurements on the facilities before the final design is established.

When an unequalized local program channel is requested, the attenuation/frequency characteristic is not guaranteed. The facility may be any local cable pair that meets the message network design objectives. The broadcaster may choose to provide the equalization and frequently does when the facility is short and nonloaded. If the facility is loaded, equalization of the grade desired may be impossible.

Frequency Response. When an equalized local program circuit is furnished, the bandwidth is specified as 100 Hz to 5000 Hz, 50 Hz to 8000 Hz, or 50 Hz to 15,000 Hz. While loss limits are not specified by regulatory bodies, these bandwidths are generally understood by the broadcast industry to be the range of frequencies within which attenuation deviates from the 1000-Hz value by no more than ±1.0 dB.

By careful attention to design, construction, and alignment, the tolerance of ±1.0 dB can usually be met. When the circuit is divided into sections with one or more amplifiers, equalization should begin at the originating end and proceed to each successive equalizer and amplifier so that the attenuation/frequency characteristic at the end of each section is as flat as possible. This procedure tends to minimize cumulative deviations.

Frequency response requirements are most difficult to meet when a number of circuits are switched to a common circuit at a program operating center. Program switching may be required when several remote pickups and a network connection are used. The circuits usually have different characteristics even though each one individually meets the tolerance of ±1.0 dB. It may be possible to connect each switched circuit in turn to the common circuit and to adjust the last equalizer in the switched circuit for the best overall response. In some cases, it may be difficult or impossible to release the facilities

long enough for overall tests. In these cases, the attenuation deviations may accumulate but they should in no case exceed ±2.0 dB and are usually less. If the connected circuits do not have the same characteristics, the overall connection can have no better response than the worst section.

Signal Amplitudes. Audio program signals should be delivered to the program circuit at +8 vu. This signal amplitude is acceptable for transmission in cable plant provided satisfactory crosstalk coupling losses exist between the program circuit and other cable pairs. If lower values of signal are delivered to the program circuit, signal-to-noise ratios are reduced unless the loss ahead of the first amplifier is correspondingly less than the maximum allowable for noise control.

Amplifier gains should be adjusted for a program output of +8 vu. The amplifiers should be capable of satisfactory operation at this power without excessive noise or distortion in order to pass instantaneous peak signals that are not measurable by use of vu meters. Since program signals are not normally available for lineup purposes, it is customary to use a 1000-Hz test signal of 0 dBm at the sending end and to adjust each amplifier for 0 dBm output. Circuits are normally designed to have equalized losses not exceeding about 32 dB in any amplifier section. Therefore, program signal amplitudes should not be below −24 vu at any point.

Nonloaded Cable Facilities. Nonloaded cable pairs may be used for local program circuits provided they can be equalized for any bandwidth normally furnished. The 1000-Hz loss of any nonloaded cable pair to be used for a program circuit or for a section of such a circuit should not exceed about 12 dB if satisfactory signal-to-noise ratios are to be maintained. Currently available equalizers can provide about 20 dB of attenuation equalization (slope). Therefore, the loss of the cable pair should not exceed about 30 dB at the highest frequency to be used.

Maximum cable section lengths, in terms of the 12-dB 1000-Hz loss and the 30-dB top frequency loss, are shown in Figure 17-3 for some commonly used types of local area cables. When a cable facility intended for program use consists of more than one gauge, the maximum allowable combined lengths can be determined by prorating each gauge on the basis of the maximum lengths shown. The percentage, when totaled, should not exceed 100 if program transmission re-

quirements are to be met. For example, assume that a cable pair with 1.4 miles of 24 gauge and 1.7 miles of 26 gauge is to be equalized to 15 kHz. The percentage of each length to the maximum is:

$$24 \text{ gauge}, \frac{1.4}{4.0} \times 100 = 35.0\%$$

and

$$26 \text{ gauge}, \frac{1.7}{3.1} \times 100 = 54.8\%.$$

In the example, the combined percentage equals 89.9 percent which indicates that this combination can be equalized to 15 kHz with proper equipment and line treatment.

CAPACITANCE		LENGTH, miles			
GAUGE	μF/mile	1 kHz*	5 kHz†	8 kHz†	15 kHz†
26	0.079	4.2	5.1	4.1	3.1
24	0.084	5.1	6.4	5.1	4.0
22	0.082	6.6	8.4	6.9	5.5
19	0.084	9.5	12.0	10.5	8.9
19	0.066	10.0	14.5	12.8	10.1

*12-dB loss
†30-dB loss

Figure 17-3. Maximum length of nonloaded cable facilities.

Where only two gauges are to be equalized, the combined computed lengths generally should not exceed about 90 percent of the maximum. If three or more gauges are to be equalized, the combined lengths should not exceed about 80 percent of the maximum. Noise and crosstalk tests should be made in borderline cases to ensure satisfactory performance.

The larger gauges have less loss and greater lengths can be equalized. Low capacitance cables have less loss at high frequencies and are more readily equalized than high-capacitance cables.

Loaded Cable Facilities. A number of loading arrangements can be used for local program circuits. They include H spacing (6000 feet), B spacing (3000 feet), and arrangements such as $\frac{B}{2}$ and $\frac{B}{3}$ spacing for program use. The type selected must have a nominal cutoff frequency high enough to permit equalization over the required bandwidth.

Load spacing for local program circuits is not as critical as for message network circuits because echo and singing are not involved; only one direction of transmission is used. However, irregular spacing tends to reduce the cutoff frequency and may introduce deviations in the attenuation/frequency response that are costly to equalize. Loading with 88 mH coils is suitable only for unequalized local program circuits. The use of loading coils of less inductance depends on the nominal cutoff frequency of the circuit.

Section lengths of loaded cable pairs can be greater than for nonloaded pairs because of the lower transmission losses. However, loaded sections should also have 1000-Hz losses not exceeding 12 dB if adequate signal-to-noise ratios are to be maintained. If mixed gauges are used, the section lengths should be reduced as discussed for the nonloaded facilities.

With circuits composed of both loaded and nonloaded cable pairs, the equalization arrangements employed must usually be of a special nature; they are dependent upon the actual circuit layout. Where the junction of the loaded and nonloaded facilities occurs at an intermediate office, each section may be equalized separately by standard methods; overall tests and readjustments may then be made to compensate for reflection effects at the junction. However, this type of layout may require the use of an intermediate amplifier at the junction office to compensate for the additional losses of the intermediate equalization. This procedure has the advantage of using the arrangement best suited to each component of the circuit with the increased probability of more consistent results.

Where the junction of the loaded and nonloaded facilities is at a point remote from an office or where intermediate amplification solely for equalization purposes can not economically be justified, terminal equalization can be employed. In such cases, the equalization is less subject to precise advance design since the final arrangements are de-

termined as a result of circuit testing. As a general rule, the first approximation would be the equalization arrangements applicable to the predominant facility. These arrangements would be supplemented by other equalization shown to be necessary as a result of circuit tests.

H Loading Systems. Unequalized circuits and circuits to be equalized to 5 kHz may utilize H44 loaded cable pairs. Both low- and high-frequency correction can be provided with program equalizers. The unequalized high-frequency response of relatively short H44 loaded facilities is within 1.5 to 2 dB of the 1000-Hz value up to approximately 4500 Hz and about 3.5 dB at 5000 Hz. Where such a characteristic is considered adequate to meet the requirements of the particular case, the equalization can be confined to a low-frequency corrector, consisting of a capacitor of 1 to 4 μF in parallel with a resistor of 100 to 2000 ohms inserted (in series) at the midpoint of the drop (central office) side of the line repeating coil. The amount of correction introduced is greater with the lower value of capacitance and the higher value of resistance.

Circuits with bandwidth requirements up to 5 kHz may utilize H22 loaded cable pairs. For the lengths of H22 loaded facilities which are ordinarily encountered, the response up to 5000 Hz should be sufficiently uniform so that no high-frequency correction is necessary. Low-frequency equalization can be obtained by the use of a low-frequency corrector similar to that described for the H44 loaded facilities.

B Loading Systems. Bandwidth requirements up to 5 kHz can be met with B44 loaded cable facilities and B22 loading can be used for circuits with bandwidth requirements up to 8 kHz. The B loaded systems have about the same frequency response characteristics as the H22 loaded systems but the insertion losses are less. Equalization requirements are similar to those previously discussed.

Program Loading Systems. There are a number of loading plans that use 7.5 mH and 11 mH coils. Some of these plans use B spacing while others use nominal 1000-foot $\frac{B}{3}$ or 1500-foot $\frac{B}{2}$ spacings. These program loading systems have nominal cutoff frequencies well above 15 kHz and can be equalized by the use of standard program equalizers.

Program Amplifiers. When amplification is required for local program circuits, any of a number of standard available program amplifiers may be used. Such an amplifier must have a substantially uniform frequency response over a range well beyond the requirements of the circuit. The output noise must not exceed 25 dBrn, program weighting, when measured at the full gain of the amplifier. The measurement should include the loss of any output pads or equipment which may be used in normal operation. The amplifier must be able to handle an output volume of at least +8 vu without measureable overloading or distortion. Amplifiers which meet these requirements are available in both ac- and dc-powered types. The ac-powered amplifiers have installation and maintenance advantages in locations which normally do not have 24-volt and 130-volt dc supplies available. These advantages are particularly evident for installations on pickup loops which are usually temporary in nature or seasonal in character. Transistor amplifiers should be considered wherever possible since they operate from the 48-volt central office filtered battery. They can also be mounted on poles or in manholes and may use either commercial power or central office battery supply furnished over a separate cable pair. They can be easily installed on customer premises and they generate less heat than tube-type amplifiers.

Carrier Facilities. The short-haul carrier channels generally found in toll-connecting plant may be used for unequalized local program circuits. When equalization is required, the use of short-haul carrier channels is restricted. However, there are no program channel units for short-haul carrier systems that can provide a bandwidth of more than 5 kHz. When a 5-kHz bandwidth is acceptable and N-carrier systems exist on the desired route, schedule A program channel units may be used.

It is recommended that studio transmitter links not be assigned to short-haul carrier systems. Program channel arrangements that use compandors can produce misleading results when noise or harmonic distortion measurements are made in order to comply with FCC acceptance test procedures. The FCC procedures call for the transmission of several single-frequency test signals at various amplitudes. The type of test equipment commonly used in the broadcast industry does not produce the desired readings with compandored facilities in studio transmitter links.

Program channel units and terminal equipment are presently available for L-multiplex systems for up to 8-kHz channels. Where toll

facilities are required for 15-kHz service, special arrangements must be employed. General Trade terminal equipment is available for multiplexing channels on radio facilities for 15-kHz service.

Equalizers. Several types of equalizers are available for use with local program circuits. One type, designed to mount in the same housing with the transistor program amplifier, can equalize nonloaded 5-, 8-, or 15-kHz circuits. These equalizers are arranged for bridging across the line and are normally applied at the receiving end of a section. They are used in conjunction with a repeating coil connected for 150 ohms on the line side and 600 ohms on the drop side. The equalizers are bridged on the line side of the coil when equalizing to 5 kHz or 8 kHz. They may be connected on the drop side of the coil when equalizing to 15 kHz.

Equalization of loaded cable pairs is done primarily by means of equalizers which are designed as unbalanced circuits. Thus, it is necessary for control of noise to insert a unity ratio repeating coil on both sides of the equalizer. For the program loading systems, it is necessary to use similar equalizers except for circuits that are very short. The nonloaded cable equalizers may be satisfactory in these cases.

Terminal Arrangements

Repeating coils are connected at the transmitting and receiving ends of each section of a local program circuit except when nonequalized circuits are requested. These coils are used so that imbalance in the termination does not convert longitudinal noise to metallic noise. They should be constructed with electrostatic and electromagnetic shields and should be of such quality that they do not add to equalization or distortion problems.

Typical connections to nonloaded cable pairs are shown in Figure 17-4(a). Note that the coils are connected to terminate the line in 150 ohms. Nonloaded cables have high impedance and low loss at low frequencies. The coils are connected to present a fairly good impedance match at high frequencies and a mismatch at low frequencies. This variation of the impedance match tends to flatten the attenuation/frequency characteristics of the line; thus, the line is easier to equalize. Over short distances, the coils alone may provide adequate equalization.

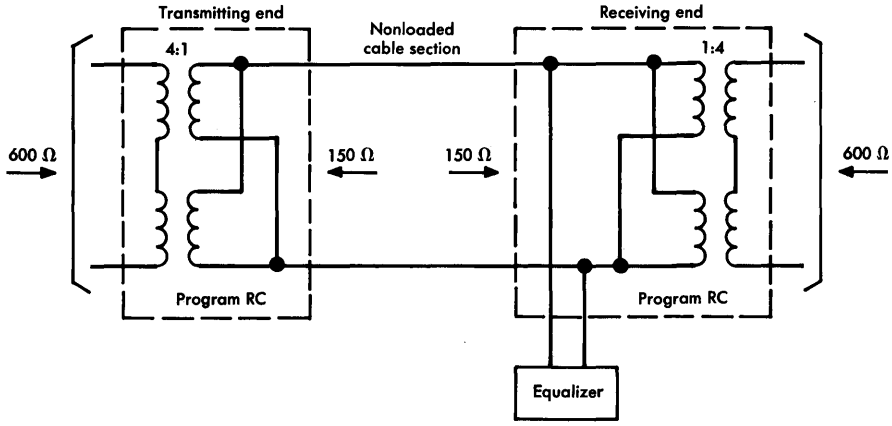

(a) Nonloaded cable equalized to 5 or 8 kHz

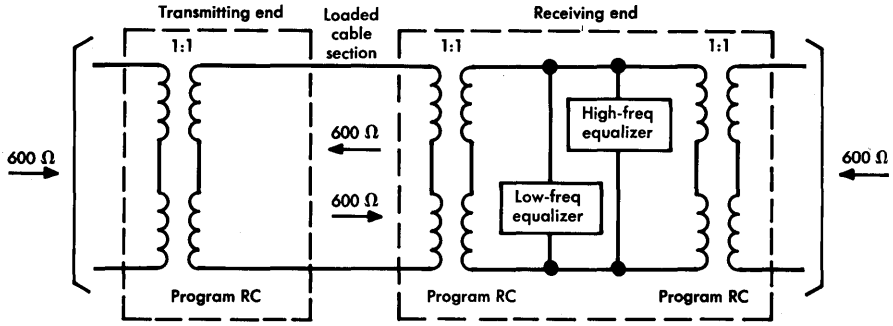

(b) Loaded cable pairs

Figure 17-4. Repeating coil arrangements for nonloaded and loaded cable pairs.

Figure 17-4(b) illustrates terminating arrangements for loaded cable pairs. Two coils are provided at the receiving end to isolate those equalizers which are unbalanced. The second coil can be eliminated at amplifier locations if the equalizer is close to the amplifier and if the amplifier input is well balanced.

Central Office Installations

If several amplifiers are to be installed in an office, it may be desirable to terminate the equipment on jack strips to provide centralized

testing, patching, and monitoring. Some circuits require the equalizer to be on the line side of the repeating coil and an additional repeating coil may also be required if the equalizer is unbalanced and not located near the amplifier. Pads may or may not be required, depending on incoming signal amplitudes and the type of amplifier. Bridges are sometimes required for branching or monitoring.

If a single amplifier is to be installed, special jack or testing arrangements are usually not economical. Portable testing equipment can be brought to the amplifier location for the occasional maintenance required.

Stereophonic Studio-Transmitter Links

Where standard FM broadcast stations may be licensed to provide stereophonic programs, two separate channels are provided for the studio-transmitter link. The two channels, designated left and right, are separate until they are combined at the FM multiplex transmitter. Each channel usually has a 15-kHz nominal bandwidth and must meet the design requirements for schedule AAA service.

If one channel is electrically longer than the other, the two portions of the signal are not in phase at the FM transmitter and the transmission/frequency characteristic of the combined signal is degraded by an amount dependent on the magnitude of the phase shift. Because the difference in phase shift is greatest at the highest frequencies, a roll-off at the upper end of the attenuation/frequency characteristic results. If the roll-off is not more than 1.0 dB at 15 kHz, the overall transmission requirements are met.

If the two channels are of equal length and if each has an attenuation/frequency characteristic that is uniform within ±1 dB over the range of 50 to 15,000 Hz and if they are within 0.5 dB of each other throughout the band, the combination produces a response characteristic within established limits and monophonic reception of the combined signal is also satisfactory.

The attenuation/frequency requirement for the two channels can usually be met by using cable pairs of identical design and in the same cable complement throughout their length. Any amplifiers used should be identical in type and located at the same point in the circuit.

Program Channel Noise

A thorough understanding of noise objectives is essential to good transmission design of program circuits. The choice of facilities and the use of amplifiers, equalizers, and accessory equipment is as important from the standpoint of noise control as it is from the standpoint of providing high quality transmission characteristics.

It is common practice in the broadcast industry to express performance and requirements in terms of signal-to-noise ratios; whereas, in the telephone industry noise is usually measured and expressed in terms of dBrn. In order to make these practices compatible and capable of being interrelated, program circuit noise is expressed in dBrn referred to the point in the circuit at which the signal is adjusted to the maximum amplitude of +8 vu. This point is usually at the originating end of the circuit or at the output of intermediate amplifiers and, for program signal transmission, it becomes somewhat analogous to a TLP in message network operations. A noise measurement at any point on the line may be corrected to the reference point by adding the 1000-Hz loss of the facility from the reference point to the point of measurement; it may then be covered easily to a signal-to-noise ratio.

The dynamic characteristics of vu meters are such that instantaneous program signal peaks are substantially higher than the observed readings. Usually, a peak factor of 10 dB is assumed and test tones of +18 dBm are used to adjust broadcast transmitters for 100 percent modulation. Since signal-to-noise requirements are based on 100 percent modulation, signal-to-noise ratios are based on peak signal amplitudes, i.e., +18 vu. With the required signal-to-noise ratio and signal amplitude known, noise objectives can be expressed in dBrn. Noise objectives have been derived on the basis of requirements that must be met in order to comply with FCC rules for broadcast radio services. These objectives, referred to +8 vu, range from +33 dBrn to +38 dBrn depending on the type of service (bandwidth) and the weighting network used in the measurement.

It is generally possible to meet noise requirements for local program circuits if they are short enough to be readily equalized. In those cases where nonloaded circuits are chosen and do not appear short enough to be equalized, loading should be considered if the service is to be permanent; intermediate amplifiers may be considered if the service is to be temporary. The choice may also be affected by

costs. In cases where noise sources are in the cable section, particularly if they are near the receiving terminal, loading may provide substantial improvements in signal-to-noise ratio. However, loading cannot improve performance when the noise is excessive at the input to the cable.

Noise problems can be minimized by ensuring that the circuit is structurally sound. Program pair terminations at distributing frames should be protected, splices must be properly made to assure low resistance, and maintenance routines must be carried out regularly to reduce the possibility of occasional noise sources impairing circuit performance.

17-2 BASEBAND VIDEO CHANNELS

There are two baseband video transmission systems in common use for local video channel application. The A2-type system is used for single link or local network applications generally having 4.5 to 5 miles between terminals.* The A4 system is used for short, one-link, nonrepeatered circuits of less than 0.5 mile. These systems provide for the local transmission of video signals between broadcast facilities as well as the interconnection of these facilities to telephone company central offices or television operating centers for retransmission over regional or national networks. These systems are also used to provide closed-circuit telecasts for business, educational, experimental, or theater TV network purposes.

The video and audio portions of television signals are transmitted over channels in the 7000 series defined in FCC Tariff 260 as shown in Figure 17-5. Service is provided for monochrome or color signal transmission on a monthly or occasional basis. Two-point and multipoint services are provided primarily to the major broadcasting networks and, to a lesser degree, on a closed circuit basis to industrial customers.

Most interoffice channels more than 25 miles long, series 7001, are furnished on microwave radio systems. A one-way baseband television channel feeds a common carrier microwave radio system FM terminal

*A2-type systems, as discussed, refer primarily to the currently standard A2A-T equipment. There are also a number of types of commercial video baseband transmission equipment available and in general use which meet Bell System performance requirements.

located at or near a television operating center; it occupies one full radio channel.

SERIES 7000 (TELEVISION)		
7001	Interchange channels and station connections carry a video signal of an approximate bandwidth of 4 MHz and an audio signal with the approximate frequency range of 100 to 5000 Hz. These channels are furnished on either a monthly or occasional (minimum period of one hour) basis.	
7002	Off-the-air pickup relay channels provide for transmission of signals at broadcast frequencies which are picked up off-the-air and relayed via one or more intermediate locations to a receiving location at customer premises. These are provided on a monthly basis only.	
7003 7004	Local Distribution Interexchange Channels	These services provide for a channel system of one to six channels on a local basis (up to 25 miles) and a channel system of one to five channels on an interexchange basis for educational and closed circuit television. Both are furnished on a monthly basis. These systems provide for monochrome or color signal transmission. Service comprises video signals and audio signals.

Figure 17-5. Television channels defined in Tariff 260.

Line Facilities

Line facilities for local links, especially designed for video transmission, are 16-gauge polyethylene insulated pairs with longitudinal and spirally wrapped copper shields. These pairs are incorporated in standard sheathed cable usually with regular local area telephone pairs. This construction results in a cable pair impedance that can be held to close tolerance with minimal echoes due to manufacturing irregularities. Because of the effective shielding of 16-gauge video pairs, there are no crosstalk limitations on the number of circuits obtainable within a given cable. However, to minimize noise, the video pairs should be separated from the remainder of the cable conductors at the building entrance and carried to the video equipment under a separate sheath.

The characteristic impedance of 16-gauge video pairs is almost a pure resistance of 124 ohms at high frequencies. Attenuation at 4.5 MHz is 18.6 dB per mile at 75 degrees Fahrenheit. Since variations in attenuation due to temperature changes are approximately one tenth of one percent per degree Fahrenheit, it is recommended that cables be placed underground when video pairs are used in outside plant. Where short lengths of aerial cable cannot be avoided, consideration must be given to the length of exposed cable, the expected temperature variation, and the overall system performance tolerances.

Office Cable

Various types of solid dielectric coaxial and shielded pair cables are used for office cabling. The 16-gauge video pairs are terminated on shielded-cable terminals designed for interconnection with these office-type cables. Cabling in both central office and off-premises installations must be arranged for wide separation or separate cable troughs for cables carrying video signals in order to avoid crosstalk. Office cables for connections to cable terminals, patching jacks, amplifier equipment, and interpanel wiring should be as short as possible to minimize noise susceptibility. Where cables longer than a few hundred feet cannot be avoided, consideration should be given to the use of connecting cable equalizers.

A2-Type Video System

The A2-type Video Transmission Systems are designed to provide essentially flat transmission of all frequencies in the video baseband, approximately 30 Hz to 4.5 MHz. These systems are capable of transmitting United States standard monochrome and National Television Systems Committee (NTSC) color video signals. Color signal transmission places especially stringent requirements on the color information band centered at 3.58 MHz.

As shown in Figure 17-6, type A2 systems may interconnect broadcast studios, master control, and transmitter in various locations within a city or metropolitan area. Two-way connections between the master control and the studios are often required for programming purposes. The connection to the local broadcast transmitter usually requires only a single, one-way system. For network operation, A2-type systems also interconnect the master control and a television operating center for video circuit switching. It may be necessary to

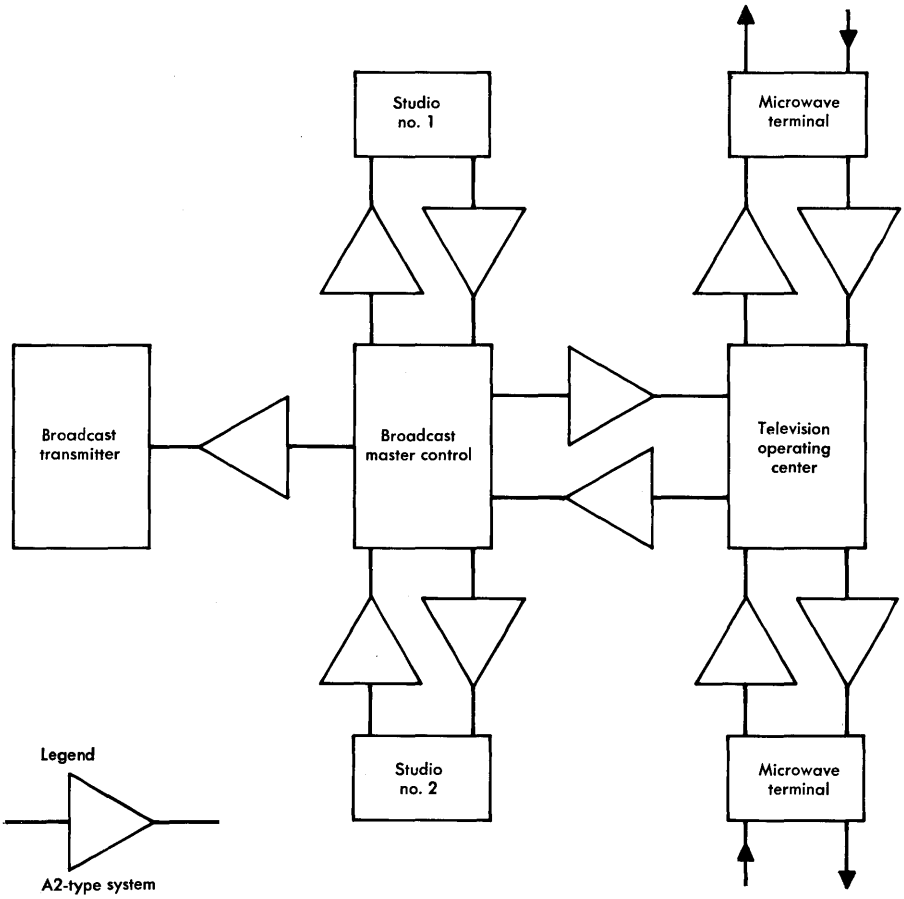

Figure 17-6. Typical A2-type system applications.

provide an A2 link from the master control to the serving central office with a microwave link to the nearest television operating center. Additional A2-type systems may interconnect the television operating center and microwave facilities for long-haul transmission between cities. Ideally, there should be as few systems in tandem as possible; the objective is to have no more than 12 between the program source and any broadcast transmitter. Lengths of A2-type systems vary from a fraction of a mile to a maximum of about 15 miles, limited by transmission objectives dictated by network considerations. Any circuit more than approximately 4.5 miles long requires the use of one or

more repeaters; maximum repeater spacings of 4.5 miles are attainable for network operation.

Performance Characteristics. In order to make transmission over long multiple-link channels feasible, the total objective must be apportioned among the various local and long-haul links. Therefore, the requirements for individual circuits are far more severe than if each circuit were allocated the entire objective for a particular transmission parameter. Performance of individual links must be equal to or better than the objectives if nationwide network objectives are to be met.

Both differential gain and phase are affected by the number and the operating levels of the amplifiers in the circuit. Therefore, the number of amplifiers should be kept to a minimum and the signal voltage levels should be kept within the limit specified for the type of amplifier. If possible, levels should be kept 3 dB below the maximum specified for the high-frequency end of the spectrum since the effects of differential gain and phase are high-frequency impairments.

Transmission Levels. Wire pair video transmission involves the amplification of weak signals at the ends of long sections of cable where the higher frequencies have been attenuated to as low a value as 67 dB below 1 volt. Amplifiers receiving these low-level signals are susceptible to outside disturbances. Noise problems may be avoided by installing the equipment so that it is not subject to possible sources of physical and electrical disturbances. Precautions are required to properly bond and ground equipment frameworks and to eliminate differences of potential between the video system ground, the power line neutral, and the ground used for studio equipment.

It is convenient to measure the video signal amplitude in terms of the peak-to-peak voltage including the synchronizing pulse and to express the amplitude in dBV. One volt peak-to-peak has been selected as a reference and is defined as a level of 0 dBV. Other voltages are compared to this reference by the relation 20 log E/1 dBV. With the reference level established, the signal amplitude at any point in a circuit is used to identify the transmission level at that point and circuit gain or loss is the difference in dB between these levels.

It is convenient to specify levels at two frequencies, for example −10/+5 dBV, to describe the slope of the attenuation/frequency characteristic. The first number, −10 in this example, refers to the tranmission level at near-zero frequency, while the second number, +5, refers to the level at 4.5 MHz. The numbers specify the ampli-

tudes of sine wave test signals at that point in the circuit resulting from 0-dBV signals introduced at a 0/0 point. Thus, at any point the numerator of the level fraction is the voltage level that would be measured if a near-zero-frequency test signal of 0 dBV were applied at the input to the transmitting terminal. The denominator of the level fraction is the voltage level that would be measured if a 0 dBV signal at 4.5 MHz were applied at the transmitting terminal.

This method of level designation is very convenient for expressing the slope of the transmission characteristic from near zero to 4.5 MHz. For example, assume that a 0/0 signal is applied to an A2-type transmitter for transmission over 2 miles of cable having 36 dB of slope between near-zero and 4.5 MHz. If there is 15 dB of pre-equalization, the output of the transmitter is —10/+5 dBV; with the 36 dB of cable slope, the level at the receiver input would be —10/—31 dBV. An equalizer with 20 dB of slope and 4 dB of flat loss would be referred to as having a transmission characteristic of —24/—4 dB; the terminology used above for level designation is used here to define loss. Thus, at near-zero frequency, the loss of this equalizer is 24 dB; at 4.5 MHz, the loss is 4 dB.

The design of the A2-type system provides high-frequency preemphasis of 0 to 32.5 dB at the transmitting terminal. The low-frequency transmission level on the video pairs is maintained at —10 dBV for all system layouts. This is possible because the cable attenuation is essentially zero at zero frequency. Thus, the maximum high-frequency level on the line leaving the terminal or repeater is +22.5 dBV.

At repeaters and receiving terminals, the low-frequency input level is —10 dBV and the 4.5 MHz input level depends upon the loss of the preceding line section and the output level of the preceding amplifier. For noise control, the 4.5-MHz level at the input to an amplifier should be no lower than —60 dBV.

The output of the receiving terminal is normally 0 dBV for either a 75-ohm unbalanced or a 124-ohm balanced output. In some cases, it may be necessary to provide higher operating levels; however, this may result in an increase in nonlinearity. Operation at higher than 0 dBV with unbalanced transmission is not recommended for color signals. When television operating centers are equipped with attenuators for minor level adjustments, the 124-ohm balanced output may be operated at +2 dBV.

Equalization. The equalization of a system requires the adjustment of the attenuation and delay characteristics over the desired transmission band. In the A2-type system, the attenuation equalization and basic delay distortion correction are included within a common unit. Fixed, plug-in cable equalizers are available in values from 2.5 to 20 dB in 2.5 dB steps, each having an attenuation/frequency characteristic inverse to that of average 16-gauge video cable. Combinations of these fixed equalizers are provided to equalize the system to within ±1.25 dB. Variable equalizers at the receiving terminal supplement the fixed equalizers to provide differential adjustment of the attenuation/frequency characteristic and to compensate for amplifier gain and seasonal temperature variations.

A series of delay equalizers is available to correct the residual delay distortion not already compensated by the fixed equalizers. These equalizers are installed in the receiving terminals. Although the attenuation/frequency characteristics of the delay equalizers have sufficient slope to require that the system be re-equalized after their insertion, the flat loss is low enough so that this re-equalization can be accomplished with the variable equalizers.

A4 Video System

The A4 Video Transmission System provides a 10-MHz transmission bandwidth over cable runs up to 0.5 mile long. The system provides temporary or permanent video connections between TV broadcast equipment and telephone company equipment. Connections from the television operating center to the FM terminals of microwave radio systems and from the video switch to the monitor and test positions of the television operating center are other applications of the A4 system. It may also be used as a clamper-amplifier.

The system can be used with several kinds of cable. The maximum span, 0.5 mile, is achieved by use of 16-gauge video cable. A span of about 0.3 mile is possible when balanced office-type cable is used. The maximum span with unbalanced cable is determined by interference problems rather than by the gain and equalization capabilities. However, 500 feet is a recommended maximum and, in certain environments, 200 feet may be the limit.

The A4 terminals are not compatible with A2-type terminals (e.g., A2-type transmitter with A4 video terminal) because of the differences in cable impedance termination and in signal amplitudes. In

A4, a resistance of 124 or 75 ohms terminates the cable, whereas, in A2-type systems, the terminations are complex impedance networks.

The A4 system accommodates a fairly wide range of operating signal levels. For normal video links, the system is operated at unity gain with 0 dBV input and output signal amplitudes. Additional gain has been provided to permit operation with inputs as low as —14.5 dBV. A maximum output of +2 dBV is permitted.

Television Operating Center

The location containing the necessary circuit and equipment arrangements properly to process television services is known as the television operating center (TOC). Operations performed in the TOC include the processing of orders for service, setting up and testing the various television circuits, switching of television circuits, and maintaining and monitoring the services after they have been established. Close cooperation is required among the TOCs, the transmitter and studio locations, and test rooms involved with these services.

Microwave systems are used for long-haul television transmission while short-haul microwave or A2 video systems are used for local video loops. The television circuits are brought into the TOC where their video levels can be adjusted to a standard value and where their frequency characteristics can be equalized. The testing, monitoring, and switching functions in the TOC are performed at a reference point, known as point X, located within the switching unit in the TOC video switch or at the input to a splitting pad. In each TOC, incoming video circuits are lined up and equalized to point X and outgoing video circuits are lined up and equalized from point X.

The TOC video layouts and arrangements vary with service requirements and local conditions. Generally, terminal equipment of the systems carrying television circuits are somewhat removed from the TOC and are connected to the video switch by means of video connecting circuits having jack appearances in the TOC video patch bays.

The TOC test positions provide a convenient means for making repeated video measurements with standard measuring conditions for each test that eliminate testing uncertainties due to unequalized cable lengths. At these test positions, transmission may be evaluated to and from any point in the local or distant TOC.

Currently, many TOCs are being replaced by television facility test positions (TFTP) to provide a more economical interface between the intercity TV network and the local loops. The TOCs will be retained in only about 6 principal cities.

The switching provisions of the TOC for network rearrangement, along with switched access for video program monitoring and sectionalized testing, are replaced in the TFTP by simple manual patch operations or by new remotely-controlled switching arrangements. For most locations, the reduction in equipment is considerable so that a typical TFTP occupies only one bay as compared to the multiple bays of the TOC. In addition, the TFTP is not continuously attended as is the TOC.

The cable facilities that provided the interconnections between the FM terminals and the video switch are retained when a TFTP replaces a TOC. With modification, these circuits and some video and audio monitoring equipment comprise a TFTP. Provisions for occasional circuit rearrangements and in-service monitoring for trouble location or quality observations are included in the TFTP. Test equipment required for alignment and maintenance is provided on a portable basis.

The TFTP receiving circuits are similar to the TOC connecting circuits and terminate in an A4 video terminal. The circuits are equalized flat (0/0) to a jack field within the TFTP bay instead of to point X in the TOC switch. The unbalanced output of the A4 unit terminates on a "test and monitor" jack field to permit in-service testing and monitoring.

As in the case of the receiving circuits, the TOC transmitting circuits are retained almost in their entirety for use with the TFTP. A splitting amplifier is added to provide an additional output for monitoring. This output appears on the "test and monitor" jack field.

The video monitoring equipment at the TFTP consists of a waveform monitor and a picture monitor. The video monitoring circuit is looped through the picture monitor and is connected to the waveform monitor to yield simultaneous displays. Cable lengths in the transmitting circuits, receiving circuits, and monitoring equipment are chosen so that the waveform oscilloscope and the jack fields are both at a flat 0/0 point.

Audio monitoring equipment (which includes a vu meter, amplifier, and loudspeaker) is provided for quality control and level measurement of the audio signal associated with each video signal. Orderwire circuits provide a communications link between the TFTP and customer locations.

17-3 CABLE RF VIDEO CHANNELS

In most RF video systems, transmitted signals are similar to standard broadcast TV signals thus permitting the use of standard TV receivers at the output terminal locations. For signals on other than regular broadcast channels, frequency converters are available for up to 25 different input channels.

For cable RF video purposes, the frequency range from 5 MHz to about 250 MHz is generally considered to consist of five bands. The sub-VHF (5 to 54 MHz) is that part of the frequency spectrum below TV broadcast channel 2. It is sometimes designated as channels T7 through T13 with standard 6-MHz spacing between channels to permit a single broadband converter to change the entire group to high-VHF broadcast channels 7 through 13. The low-VHF band (54 to 88 MHz) may also be extended to include the FM radio broadcast band of 88 to 108 MHz. The mid-VHF band (usually 120 to 174 MHz) and the super-VHF band (216 to 300 MHz) have not yet come into general use and are therefore not discussed here. Finally, the high-VHF band (174 to 216 MHz) includes TV broadcast channels 7 through 13. Systems are available to transmit one or more of these bands.

All of the services that are arranged to interconnect directly a television signal source to distant receiving or monitoring equipment are generically called closed circuit television (CCTV). Usually, transmission is in one direction only but amplifiers and other equipment are available for transmitting in both directions on the same cable. For such applications, signals at frequencies above 54 MHz are transmitted in one direction while those below 30 to 35 MHz are transmitted in the other.

Community antenna television (CATV) is a system whose primary function is the transmission of several television signals from a single location (head end) to a number of receiving locations. The number of channels may vary from 5 to the usual maximum of 12 and may also include several FM broadcast channels or the entire FM band (88

to 108 MHz). The signals transmitted are usually received directly off the air from standard VHF or UHF broadcast stations but one or more may be received off the air at a distant location and relayed to the head end by a microwave system. Such signals are demodulated to baseband before application to the microwave system. In some CATV systems, one or more channels may be designated by the customer for use by a local school system for educational applications. Such channels may also carry off-the-air signals from an educational television broadcast station or live, filmed, or video tape programs furnished by the schools involved.

Educational television (ETV) is a system arranged primarily for transmitting television signals from one or more input points, usually centrally located within the area served, to numerous viewing locations in classrooms, lecture halls, etc. Usually, the sub- and low-VHF bands (where cable losses are relatively low) are used for ETV systems to permit longer spacing between line amplifiers. In the larger ETV systems, microwave radio facilities are used to interconnect the local facilities of separate cities, towns, or school districts where the distances are too great to permit economical use of cable transmission.

Industrial television (ITV) may have several input signal sources and usually one or more output or viewing locations. It is commonly used for one-way or two-way visual communication between different plants and offices of a business concern and/or for surveillance of critical locations such as entrance gates, storage areas, and heavy traffic locations. Channel frequencies are chosen according to the number of channels to be used simultaneously and the distances from signal sources to output or observing locations. In short systems, the type of cable used is influenced by distance and its effect on required amplifiers.

Pay-TV is a system arranged to transmit nonbroadcast program material, such as selected motion pictures, athletic events, etc., for which a separate fee is paid for each program actually observed. To prevent unauthorized viewing, the transmitted signal is scrambled, or modified, in such a manner that it does not provide a useful picture and sound on a conventional TV receiver unless unscrambled, or restored, by a coin-operated or time-recording device at the receiver.

Transmission Objectives

The primary objective in the design of a CCTV system is to provide an acceptable television picture. This can be accomplished by selecting suitable components, by locating them properly in the system, and by operating them within specified limits. Therefore, in designing a system, certain transmission objectives must be met. These objectives assume that CCTV channel signals are in a standard broadcast format in which the video signal amplitude modulates a carrier and is transmitted with a vestigial sideband. The signal has a nominal bandwidth of 4.2 MHz and the associated audio carrier is 4.5 MHz above the video carrier. For high-definition television transmission (8- to 10-MHz bandwidth), the same general principles apply but specific objectives and characteristics must be changed to meet the particular requirements.

Many CCTV objectives are derived from the accepted standards for broadcast television service. Broadcast standards are quite severe because of the nature of the service and customer demands [1]. In general, broadcast service requirements are relaxed 6 dB for CATV and ETV and 3 dB for pay-TV. Overall CCTV objectives are covered in Figures 17-7 and 17-8.

PARAMETER	OBJECTIVES	
	CATV, ETV	PAY-TV
Signal-to-noise ratio	43 dB	46 dB
Signal to cross-modulation ratio	52 dB	55 dB
Signal to single-frequency interference ratio	63 dB	66 dB
Signal-to-hum ratio	50 dB	53 dB
Echo rating	34 dB	37 dB
Differential gain	±2 dB	±2 dB
Differential phase	±4°	±4°

Figure 17-7. RF system transmission objectives.

Noise. Thermal noise originates primarily in the input circuit of each amplifier, including those in the head-end channel processors, pre-amplifiers, and frequency converters. The system signal-to-noise ratio (S/N) varies according to the signal input level to each amplifier and can be improved by using higher input levels or by reducing the number of amplifiers.

PARAMETER	OBJECTIVES
TV video carrier amplitude	0 to +20 dBmV*
TV audio carrier amplitude	15 ±1 dB below video carrier
FM carrier amplitude	20 dB below low VHF band video carrier
TV channel stability	
Short term (less than 1 min)	±0.5 dB
Long term (over 1 min)	±4.0 dB
Adjacent channel level difference	±1.0 dB
RF channel slope	
5 to 90 MHz	10.0 dB
54 to 216 MHz	10.0 dB

*dBmV is dB relative to one millivolt.

Figure 17-8. RF system objectives at drop output.

When a TV channel signal is transmitted to a CCTV head end or other input point by microwave radio relay or an A2-type or other cable transmission link, the noise contribution of each system must be considered in determining the overall S/N. The S/N of the link must be combined with the S/N of the CCTV system to determine the overall S/N for that channel.

Cross-Modulation. When a system transmits only the low- and high-VHF broadcast bands (54 to 88 MHz and 174 to 216 MHz respectively), all second-order modulation products (with the minor exception of those between 87 and 88 MHz) are outside the frequency ranges of interest and only the third-order products are significant. When a system transmits the sub-VHF and low-VHF bands (5 to 54 MHz and 54 to 88 MHz, respectively), second-order products may create excessive interference, particularly in older types of equipment. In most amplifiers of current design, third-order modulation products are still controlling.

The signal to cross-modulation ratio of any CCTV amplifier can normally be computed by comparing the rated full output power for a given cross-modulation ratio and number of channels to the actual design operating power output and number of channels. Such a computation must take into account not only the published specifications but also the method of measurement used to derive the specifications.

Levels. Levels on a CCTV system are important because the level at each amplifier input determines the noise contribution of that amplifier and the level and slope at each amplifier output determine the cross-modulation contribution of that amplifier. Since the difference between the input level and the output level is the net gain, selection of operating levels represents an engineering compromise in which total S/N and cross-modulation performance is offset by amplifier cost per dB of useable gain.

The level at the input to the TV receiver should be not less than −3 dBmV for any video carrier and generally not more than 17 dB above one millivolt (+17 dBmV). This allows 3-dB loss for the inside wiring and requires a video carrier level of 0 to +20 dBmV at the drop output. Excellent performance of a reasonably well-adjusted television receiver may be expected with this input level as shown in Figure 17-9.

INPUT LEVEL, dBmV	RECEIVER PERFORMANCE
0	Excellent
−6	Good
−12	Marginal
−18	Poor

Figure 17-9. Television receiver performance.

Radiation. In CCTV two types of RF radiation are of interest. The first is radiation from the system of such level as to cause interference to radio or television receivers. The second is radiation from other sources of RF signals or noise into the cable or equipment; this type causes interference to signals on the cable system.

Radiation from a CATV system is restricted by FCC Rules and Regulations, Part 15.161; by inference, the same limits apply to other types of cable TV transmission services. While limits are specified in terms of maximum permissible field strength at a given distance from the cable system, it should be noted that even when these specifications are met the system must be corrected if any radiation causes interference to the reception of authorized broadcast signals.

In some cases, signals from one or more local television broadcast stations may be picked up by the 300-ohm twin-lead portion of the

receiver connection and may interfere with the same channels received from the cable system.

If fewer than 12 channels are used, the signal in trouble may be transferred to an unused channel. If this is not practical, the receiver connection may sometimes be modified so that the shielded coaxial wire is extended to the tuner unit with the 75- to 300-ohm transformer placed as close as possible to the tuner input terminals. In some cases, it may also be necessary to provide a higher level signal from the cable system by using a lower loss tap-off device. The latter is to be avoided, if possible, as it may also add to the through loss of the tap and require closer spacing or higher gain and output level in line extension amplifiers. In extreme cases, both receiver modification and higher levels at the drop may be necessary.

Frequency Assignments

The choice of frequency band or bands to be used for any particular system must be based largely on the number of channels to be transmitted, the distances over which they must be transmitted, the type of input signals, and the type of receivers or monitors to be used. In most cases, a review of these factors readily indicates which frequency range(s) can most economically meet the service requirements.

For CATV service, most of the input signals are standard VHF-TV broadcast channels. It is usually preferable to maintain these channels on the same channel frequencies as received. If cochannel interference is observed at some location, the disturbed signals may be transferred to other channels at the head end (in systems providing less than 12 channels). Signals in the UHF band must always be converted to VHF channel frequencies.

For long cable links where no distribution is required, such as from a distant head end to a distribution area or between separate towns or villages with no need for distribution in between, it would appear that high-VHF channels could be converted to sub-VHF channels (channels 7 through 13 converted to T7 through T13) to permit longer amplifier spans, hence, fewer amplifiers. However, careful consideration should be given to the noise and cross-modulation distortion in the head-end high-VHF to sub-VHF converters because it may more than offset the improvement gained by fewer line amplifiers.

REFERENCE

1. American Telephone and Telegraph Company. *Telecommunications Transmission Engineering*, Volume 1, Second Edition (Winston-Salem, N. C.: Western Electric Company, Inc., 1977), Chapter 26.

Chapter 18

The Digital Data System

The Digital Data System (DDS) is designed to satisfy the service needs of a new and growing class of customers. Digital transmission capability is required primarily for communications between business machines. This system is evolving as a network independent of but sharing facilities with the switched message network. Provision has been made in the network plan for flexibility in the use of old and new facility designs, for a rapid or slow growth rate, and for a variety of input signal formats and information rates [1].

While some use is made of analog transmission facilities, the DDS is essentially an all-digital system. Service objectives have been established in terms of digital system parameters. Signal formats are digital throughout the system and the digital data signals are multiplexed by time division multiplex techniques.

Initially, the switched message network was composed exclusively of analog transmission facilities. Customer-generated digital signals, normally delivered for transmission in the form of baseband amplitude-shift-keyed signals, could not readily be transmitted over these facilities [2]. Signal processing that was necessary to facilitate transmission of digital data signals was provided by DATA-PHONE data sets furnished by the Bell System. The data sets, and other forms of terminal equipment, provided digital data signal transmission at various speeds appropriate to the voiceband and, in addition, provided high-speed transmission in wider bands [3]. Presently, the processing functions are also accomplished in some cases by customer-provided terminal equipment.

Signal processing is facilitated in the DDS because the operations, in most cases, involve only logic functions and time division multiplexing and do not usually require digital-to-analog and analog-to-digital conversions to make the digital data signal suitable for transmission over analog facilities.

18-1 SYSTEM DESCRIPTION

The Digital Data System provides duplex point-to-point and multipoint, private line digital data transmission at a number of synchronous data signal rates called service speeds. DATA-PHONE digital service is provided in DDS but alternate voice service and voice circuit coordination are not provided. In addition to the advantages of high facility utilization and more consistent transmission performance than would be possible if the digital system shared the switched message network, the DDS also provides high end-to-end reliability, low average annual down time (time out of service) and the ability to monitor and alarm most transmission facilities and terminal equipment on an in-service basis. In addition, four-wire, duplex operation eliminates transmission delays inherent in reverse channel or turnaround operation on half-duplex channels.

Service objectives have been established for the DDS. Signal formats and multiplexing arrangements are specified. The network configuration is arranged to permit logical growth and flexibility in rendering service. Facilities are used efficiently to provide an economical system.

Service Objectives

The stringent service objectives set for the DDS are important factors in establishing system design and administration. The objectives satisfy the three primary concerns of quality, availability, and maintainability. Present objectives should be regarded as preliminary design objectives since they are subject to change as experience with DDS is accumulated [4].

The objective for transmission quality is that there should be at least 99.5 percent error free seconds. This objective relates to the efficiency of data communications, since errors often reduce throughput (a term used to express data transmission efficiency) by necessi-

tating retransmission of blocks of data. The percentage of error free seconds pertains to all service speeds and may be translated to maximum error rate requirements for each service speed. The 56 kb/s requirement is most stringent and is used for allocation of requirements to each portion of the DDS.

The objective for "availability" is that DDS circuits shall have at least 99.96 percent long-term average availability station-to-station or, in terms of outage, a long-term average down time of no more than 3-1/2 hours per year. The term availability is preferred to reliability since the latter may be construed as the percentage of time the channel is both connected through and error free. In other words, the quality and availability objectives together determine the reliability of the channel.

The objective for maintainability is that no single outage shall exceed two hours, an objective that recognizes the perishable nature of some data and the increasing impact on customer operations as an outage persists. It is expected that experience, increased mechanization in trouble detection and location, and emergency restoration practices will minimize the percentage of outages that exceed two hours. These objectives seem to be achievable for DDS all-digital channels used for point-to-point and multipoint services. A separate set of objectives applies to analog off-network access arrangements.

Signal Formats

With the gradual evolution and expansion of digital transmission facilities, new alternatives for more efficient transmission of binary digital data signals have become available. Type T1 digital carrier systems utilize D-type pulse code modulation (PCM) channel banks to encode 24 voiceband signals into a time division multiplexed digital signal for transmission over a regenerative repeatered line. The resulting 1.544 Mb/s line rate is defined as the DS1 rate. The type T1 systems have become the predominant short-haul carrier systems. This predominance was brought about because these systems generally are more economical than analog systems for deriving voice-grade channels on paired cable and because they also provide equivalent voice quality and lower idle circuit noise. Their adaptability to digital data transmission was demonstrated after they had entered voice service.

Since the voice-frequency interface to the D-type channel bank is analog, there is only small advantage in choosing T1 systems as preferred links for conventional voice-grade digital data private lines [5, 6]. However, significant improvements in both efficiency and data signal quality are realizable if the input digital data signals can be received and regenerated at the telephone office in a baseband digital format. They can then be treated by logic processes and time division multiplexed directly on a T1 line or other DS1 rate facility without analog-to-digital conversion.

The first applications of these digital processing techniques were in a series of T1 carrier wideband terminals which were designed to achieve a number of standard bit rates for optional synchronous or asynchronous operation. The maximum rate, achieved by dedicating the entire T1 line signal to the wideband service, is 500 kb/s. In terms of bit rate per voice channel displaced, this is equivalent to about 20.8 kb/s per channel. When the theoretical 64 kb/s digital data capacity of a voice channel slot in the standard DS1 rate signal is considered, the 20.8 kb/s per channel is relatively inefficient. The cause of the inefficiency is that three DS1 pulse positions are required to encode one data signal transition in order to adapt the synchronous DS1 bit stream to the transmission of asynchronous signals.

Much higher efficiency can be achieved if all data inputs are synchronous and if individual input bit streams are given clock speeds which are submultiples of the DS1 rate. This is the basis on which the DDS has been planned. The total useable bit rate can be a substantial fraction of the DS1 rate itself. However, pulse slots must be reserved for identification and demultiplexing of individual data signals (framing), for transmission of certain status and control signals, and for ensuring that the multiplexed bit stream pulses occur often enough for clock recovery and regeneration. Nevertheless, the DDS can achieve up to 56 kb/s per voice channel displaced which is 87.5 percent of the theoretical maximum. This efficiency, together with the high quality of service achieved through tight control of error rate and a coordinated maintenance plan for DDS facilities, makes the Digital Data System an attractive medium for data transmission at synchronous bit rates up to 56 kb/s.

Signals used in the DDS are specified to very carefully determined signal formats and limited to several choices of service speeds and combinations of time division multiplex (TDM) arrangements. At first, these specifications and limitations may appear to limit the use-

fulness of the DDS but it is through such standardization of signals that a flexible network service can ultimately be organized.

In the DDS, baseband digital data signals are multiplexed into the same DS1 bit stream format as that formed by the newer D-type channel banks. This format consists of 24 sequential 8-bit words (channel slots) plus one additional framing bit; the entire sequence is repeated 8000 times a second. Thus, the multiplexed DDS signal is of the right format to be transmitted over any facility in the existing or planned digital hierarchy. Moreover, use of a multiplexed data word structure consistent with the DS1 voice channel structure permits formation of DS1 signals containing both voice and data in cases where full dedication of a DS1 facility to data transmission would be inefficient.

Digital Data Capacity and Service Speeds. Since each 8-bit word is repeated 8000 times a second, the data transmission capacity of each channel slot is theoretically 64 kb/s. However, for DDS use, this 8-bit word, called a *byte,* requires the reservation of one of the 8 bits (designated the *C* bit) to facilitate passing of network control information and to satisfy the minimum pulse density requirement for clock recovery on T1 lines. Thus, use of the 7 remaining bits in the byte results in a maximum service speed per displaced voice channel of 7 bits/byte $\times$ 8000 bytes/second = 56 kb/s. In the DDS, this maximum rate is one of the standard service speeds. Three other service speeds, called subrate speeds, are provided at 2.4, 4.8, and 9.6 kb/s.

For the three lower service speeds, requirements for submultiplexing dictate the reservation of an additional bit per byte to establish synchronization patterns for routing each byte to the proper output port of the receiving submultiplexer. Therefore, the maximum capacity of a subrate byte is 48 kb/s. Subsequently, this byte may be assigned in successive DS1 frames to five 9.6 kb/s, ten 4.8 kb/s, or twenty 2.4 kb/s channels respectively.

The maximum efficiency achievable in DDS, expressed as a percentage of the theoretical maximum of 64 kb/s per byte, is $100 \times 56/64 =$ 87.5 percent for the 56 kb/s service speed. Maximum efficiency for the subrate service speeds is $100 \times 48/64 = 66.7$ percent.

Multiplex Subhierarchy. The DDS may utilize all or any part of the standard digital multiplex hierarchy. However, to effect more efficient

utilization of high-speed digital transmission facilities, for which the digital hierarchy has been developed, a subhierarchy of TDM arrangements has been provided for the DDS. Two signal formats used in the DDS subhierarchy are ultimately combined into a DS1 (1.544 Mb/s) signal for transmission over digital transmission systems. The relationships between these formats and the parts of plant in which they appear are shown in Figure 18-1. The customer signal, at one of the standard service speeds (2.4, 4.8, 9.6, or 56.0 kb/s), is converted at the loop input to a 50-percent duty cycle, return-to-zero (RZ) signal at the selected service speed for transmission over the loop to the serving central office.

At the central office, the signal is converted to a 64 kb/s, bipolar, 100-percent duty cycle, nonreturn-to-zero (NRZ) signal for intraoffice transmission. The format, called the DS0 signal, may consist of multiplexed (packed) signals of like service speeds or a single data signal of the customer service speed carried on the DS0 signal (by a process called stuffing).

Finally, the DS0 signal is processed for transmission over interoffice facilities. The processing consists of stuffing and/or multiplexing signals for transmission in the DS1 format.

Network Configuration

The DDS network consists of selected metropolitan areas that have substantial short-haul digital transmission facilities and the capability of being economically interconnected by long-haul digital facilities. The number of areas served is expected to increase in a planned manner dependent on the market growth and regulatory approval.

A DDS digital serving area (DSA) is generally a metropolitan area where all links between DDS offices are T1 lines. As shown in Figure 18-2, there are three classes of DDS offices within a DSA, each serving as a concentration point for customer data streams. These offices are organized in a hierarchy in order to maximize the fill efficiency for both intra-DSA and inter-DSA digital facilities.

Hub Office. A digital serving area consists of one or more hub serving areas. Each hub office serves as the cross-connect and testing access point for all DDS channels that have end points in its serving area; hence, it is generally the location of the serving test center

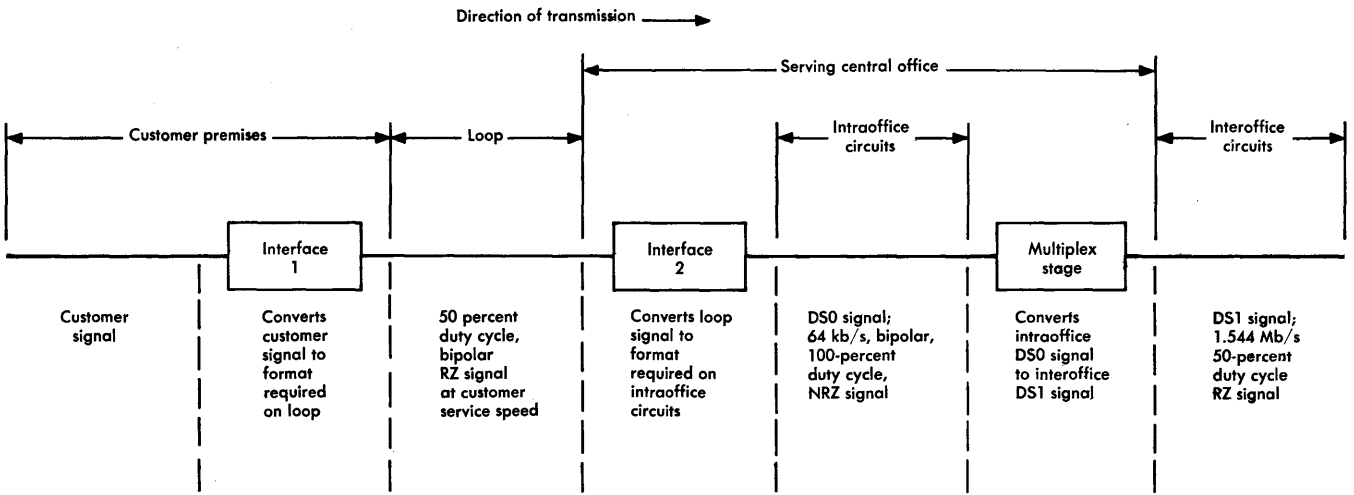

Note: Inverse processing must be provided for the opposite direction of transmission. Four-wire transmission is used throughout.

Figure 18-1. Subhierarchy of DDS signals.

(STC). All inter-DSA signals from the hub area are concentrated at the hub into efficiently packed data streams for transmission over long-haul facilities. The hub also contains the timing supply upon which all timing supplies in its homing offices are synchronized.

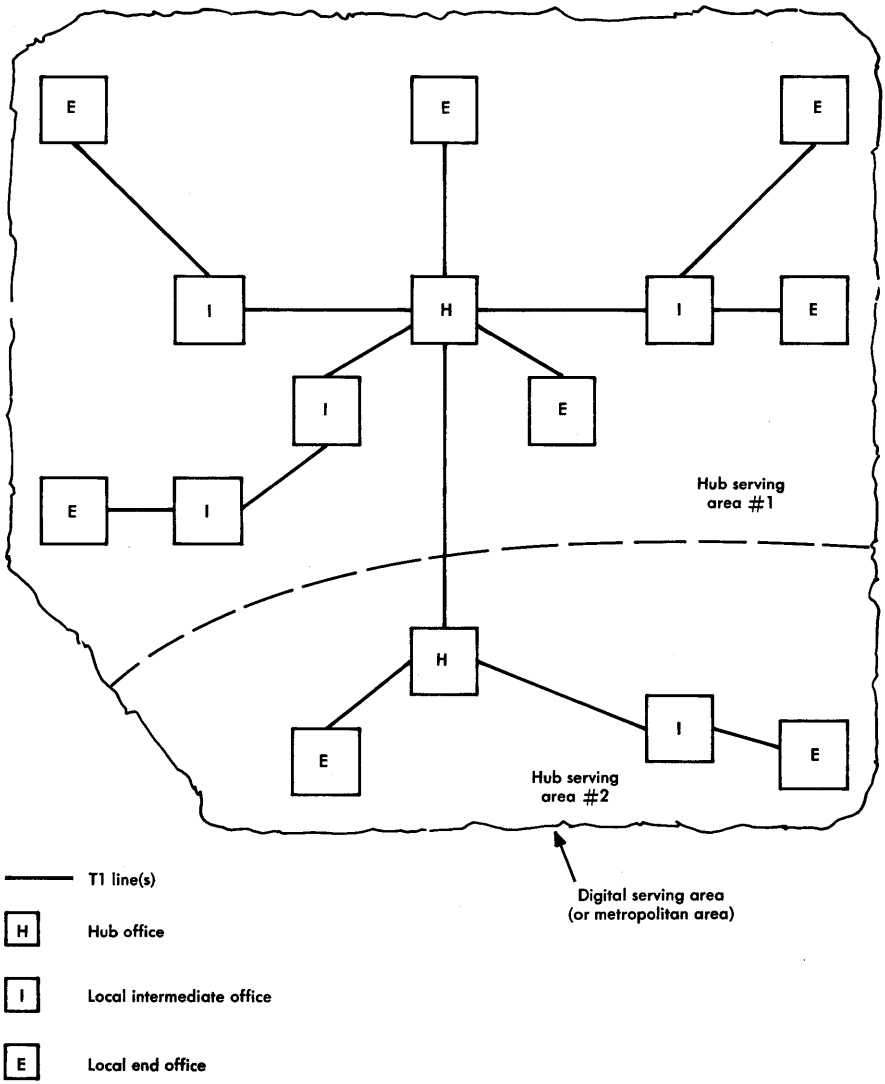

Figure 18-2. A DDS digital serving area.

End and Intermediate Local Offices. The hub office is the DDS serving office for all customer locations within its baseband loop transmission range. However, clusters of customers within a digital serving area may be outside this range. Offices central to these clusters are designated DDS local offices and serve these customer locations via baseband loops. Where transmission limits or economics require, other local offices provide the required subrate concentration; the resultant signals are multiplexed for transmission over T1 lines to the hub office.

Since all individual DDS channels must be interconnected with the hub office for maintenance purposes, T1 span lines between each local office and its hub must be available. However, it is not necessary that a direct T1 system be dedicated for DDS from the hub to each local office unless the amount of DDS traffic so warrants. The T1 systems terminating in local offices at both ends may carry DDS traffic originating at the far office to the near office where the signal may be demultiplexed and remultiplexed along with other DDS traffic and carried on another T1 system toward the hub. In this manner, more efficient packing of T1 lines can be accomplished. The office farthest from the hub on such routings is designated an *end office* and the near offices *intermediate offices*. As shown in Figure 18-2, a tree-like hierarchy radiating from the hub results. Certain intermediate offices, called collection hubs, contain cross-connection features used for maximizing fill.

Transmission Line and Terminal Facilities

The relatively high efficiency of the DDS is achieved by limiting the customer input signal to a few bit rates in a synchronous format and by using facilities that carry digital data signals in flexible multiplexed combinations over long or short distances. Some of the required facilities in the Bell System have evolved from accumulated experience in transmitting digital signals over various kinds of analog and digital transmission systems. Facility terminations, timing units, multiplexers and submultiplexers, testboards, and cross-connect frames have been developed specifically to meet DDS needs.

Loop Transmission. The transmission of signals from a remote customer location to the serving central office usually is over a four-wire loop made up of local cable pairs. Two processing steps are involved, one at each end of the loop. The required facilities, which include a

service unit at the customer premises and a channel unit at the central office, are shown in Figure 18-3.

The signal transmitted over the loop is synchronized to the appropriate clock rate. This clock rate is recovered at the remote location from the incoming data or idle code signal transmitted from the central office. The signal transmitted toward the central office also contains certain coded sequences that contain bipolar violations to distinguish them from valid data sequences. These special codes are inserted in place of six successive *0*s (seven *0*s in a 56 kb/s signal) to maintain pulse density sufficient for clock recovery at regenerative repeaters and for the transmission of certain status and control information. For example, idle codes to and from the customer location and trouble and loopback codes to the customer location are generated in this manner.

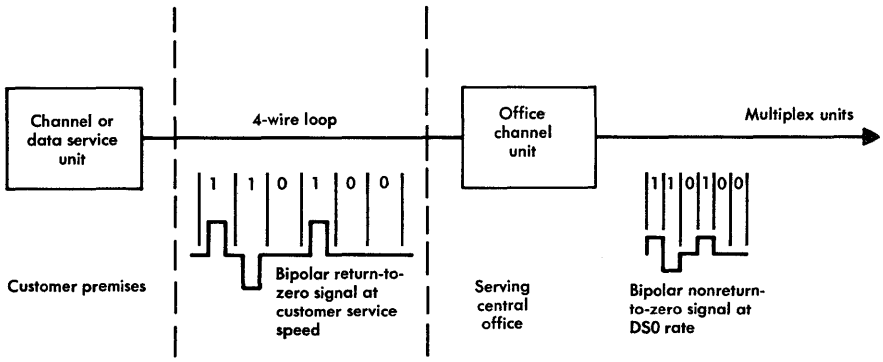

Figure 18-3. Customer loop facilities for DDS.

Customer Premises Terminations. The service unit at the customer location may be one of two types, a data service unit (DSU) or a channel service unit (CSU). The choice is a customer option [4, 7].

The DSU, shown schematically in Figure 18-4, accommodates the RS-232C interface specified by the Electronics Industry Association (EIA) for subrate services [8] and a combined EIA-CCITT type interface for the 56 kb/s service speed.* The unit contains circuitry

*The transmission and clock leads are provided in a manner similar to CCITT interface specification V.35 developed initially for 48 kb/s wideband service. The control leads are specified according to EIA standards.

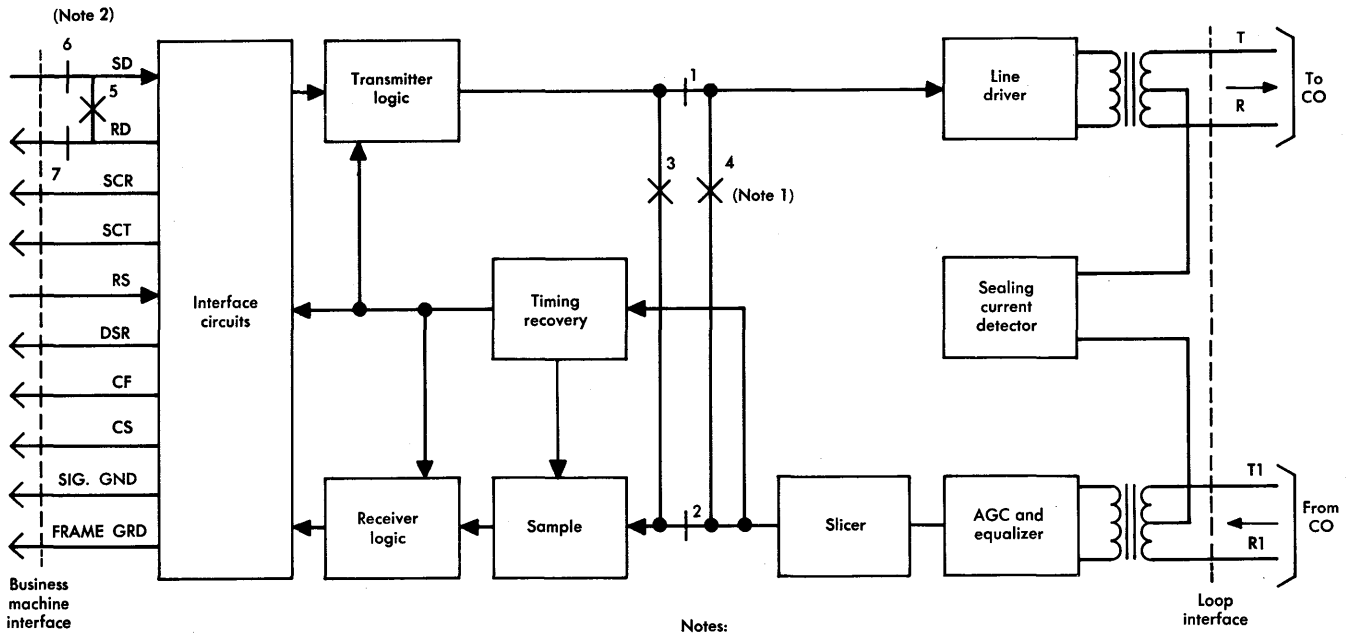

Notes:

1. The operation of contacts 1 through 4 may be initiated manually or by the reversal of sealing current to provide loop-back tests in both directions.
2. The operation of contacts 5, 6, and 7 may be initiated manually or by the transmission of a control code from a test center to provide loop-back toward the test center.

Figure 18-4. Block diagram, data service unit.

which converts the customer signal to the 50 percent duty cycle, bipolar, RZ signal in the transmitting direction. The circuits provide the logic for zero substitution and idle code generation. The receiving circuits contain logic for recognizing idle and trouble codes; these circuits convert the incoming signal to the EIA (or CCITT) format and remove any zero substitution codes. Clock recovery circuits pass the received clock signal to the customer. The CSU, shown in Figure 18-5, is designed to interface with customer-provided equipment which accomplishes the preceding functions of the DSU.

The CSU and DSU both provide plant and personnel protection. They contain sealing current continuity circuits, detection arrangements, and a line driver consisting of a transmitting amplifier and filter.* Automatic gain control, equalization, and slicing circuitry provide for the recovery and reconstitution of the received signal. Each unit also contains circuitry to recognize and respond to loopback commands from the serving test center. Separate versions of the CSU or DSU are required for each service speed [4, 8]. All units are powered from a commercial ac source provided by the customer.

Office Channel Unit. In the DDS office, the local loop is terminated in an office channel unit (OCU) selected to match the customer service speed. The line side (baseband) portion of the OCU functions in a manner similar to that described for the channel and data service units. The OCU includes the provision for automatic shaped gain control (called automatic line build-out) and permits the application of sealing current and its reversal. The OCU can be looped back through a fixed pad on the line (loop) side on command from the serving test center.

In the direction of transmission from the loop, the OCU converts the baseband signal to a standard DS0 signal regardless of service speed. The process is reversed in the opposite direction. Figure 18-6 illustrates the byte organization of the 64 kb/s signal for each service speed. The DS0 rate is maintained for subrate inputs by a process called *byte stuffing* which places the same word (the same subrate

*Sealing current, usually dc, is transmitted over a pair of wires for the purpose of maintaining a low resistance at splices and other connection points by breaking down small accumulations of dirt and oxides to reduce noise and other trouble conditions. A reversal of sealing current, initiated by the OCU in response to a control code received from the serving test center, is interpreted by the CSU or DSU as a signal to establish a loopback condition.

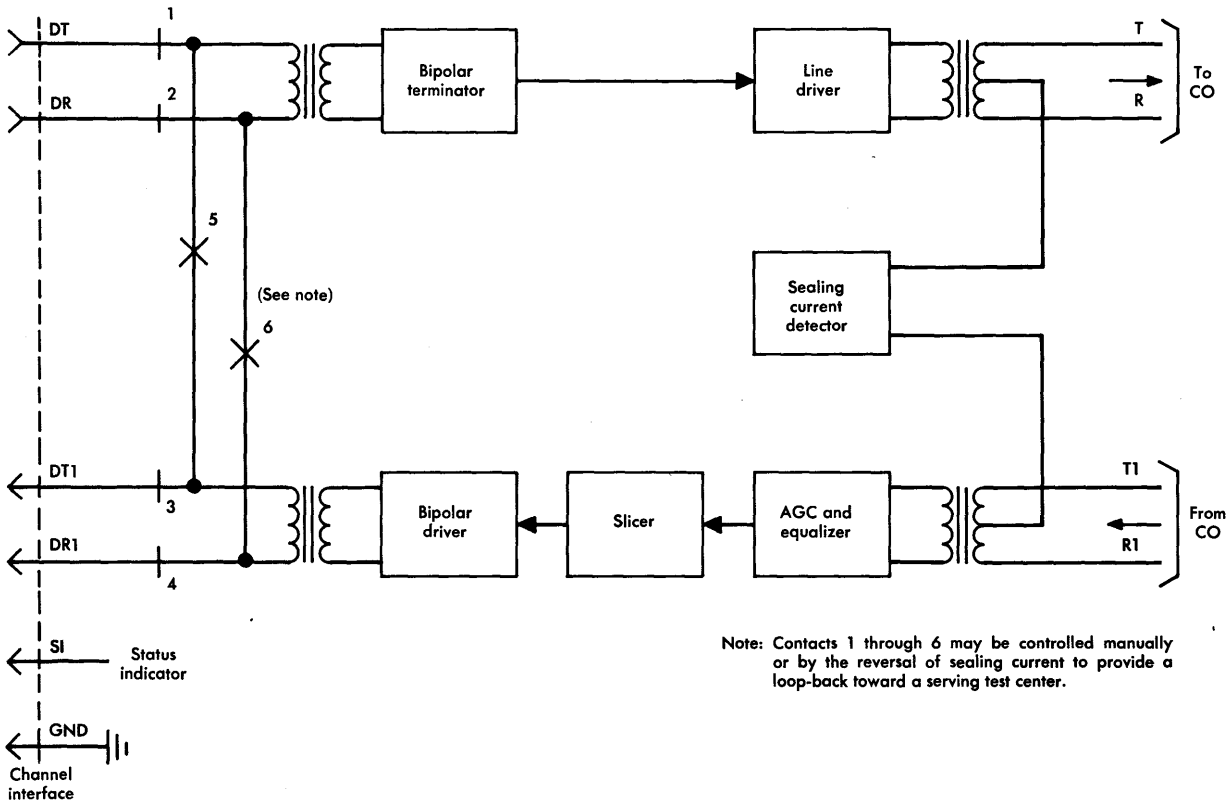

Figure 18-5. Block diagram, channel service unit.

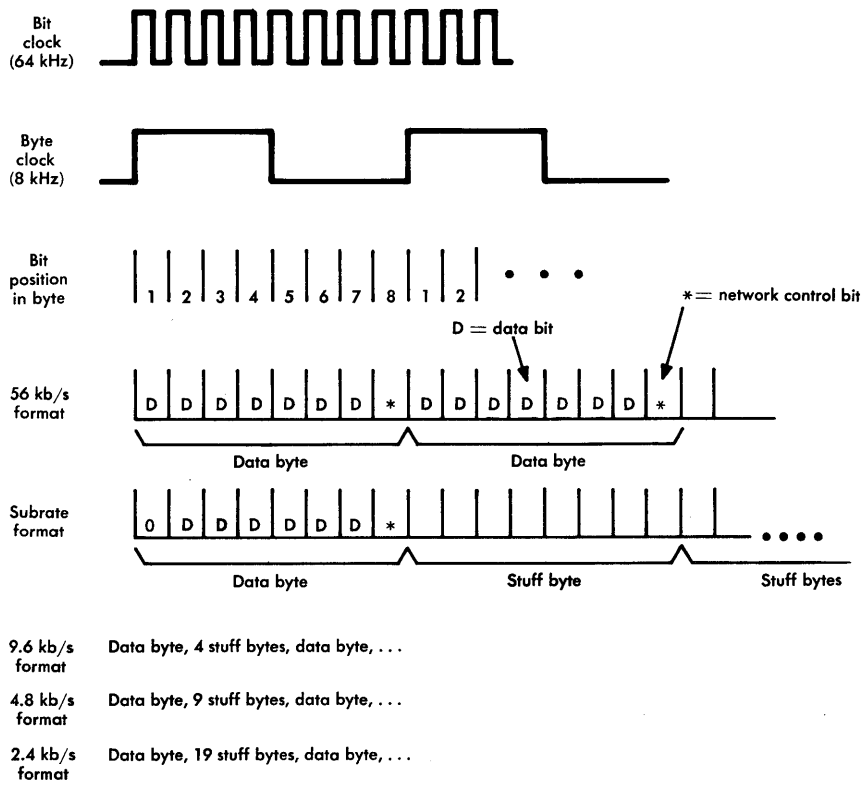

Figure 18-6. Format of DS0 signal.

byte content) in 5, 10, or 20 successive 64 kb/s bytes corresponding to the 9.6, 4.8, or 2.4 kb/s service speeds, respectively.

Establishment of the one fundamental (DS0) rate permits the use of standard test equipment at local offices, efficient multiplexing and cross-connection arrangements, and a standard multipoint junction arrangement for all customer service speeds. It also permits distribution of network timing signals within the office at a standard rate.

Analog Extensions. Customers outside the baseband range of the hub office or too scattered for the economical establishment of a local DDS office can gain access to the DDS via analog links. Such links are designed by the application of engineering criteria similar to those for other point-to-point private line data channels using analog facilities. Data sets must be adapted to terminate such lines at both

ends. End-to-end DDS service objectives cannot generally be realized for such analog-extended service although access to the special maintenance features on the DDS portion of such lines allows improvement over all-analog private lines.

Submultiplex Stage. As can be seen from Figure 18-6, the 56 kb/s DDS signal can carry different data signals in successive DS1 bytes. This may not be true for the subrate speed formats because of the redundancy inherent in byte stuffing. For example, the data content of a 2.4 kb/s subrate byte would occupy the same channel slot in the DS1 signal for twenty successive frames, although needed only once in twenty frames at that service speed. Hence, direct multiplexing of the subrate office channel unit outputs into DS1 channel slots can result in up to a twenty-fold loss in transmission efficiency. Therefore, *subrate data multiplexers* (SRDM) have been designed for each subrate service speed. These provide ports that accept up to five 9.6 kb/s, ten 4.8 kb/s, or twenty 2.4 kb/s DS0 signals from OCUs of corresponding service speeds. The SRDM sequentially combines the data bytes from the OCUs into a single byte stream resulting in substitution of the bytes from different channels for the repeated, or redundant, bytes in the OCU signals. Figure 18-7 illustrates this process for five separate DS0 signals combined by a 9.6 kb/s SRDM. The output of the SRDM is also a DS0 rate signal with successive bytes containing data from different channels which can then be inserted in like-numbered channel slots of successive DS1 frames by the next stage of multiplexing. Observation of the byte formats for the subrate speeds in Figures 18-6 and 18-7 also shows how the pulse slot for the first bit of each OCU subrate data byte, which is always a *0*, is utilized by the near-end SRDM to insert bits (designated S) for synchronization of the demultiplexing process at the far-end SRDM.

It is possible to connect individual 4.8 kb/s or 2.4 kb/s DS0 signals to one or more ports of a 9.6 kb/s SRDM or individual 2.4 kb/s signals to the ports of a 4.8 kb/s SRDM to avoid immediate installation of a separate multiplexer for each rate. Although this procedure does not fully pack the DS0 output bit stream, it does provide considerable flexibility during initial growth periods. There is also an *integrated subrate data multiplexer* (ISMX) combined with an OCU shelf which is used exclusively for economy in local office arrangements. The ISMX packs either five or ten subrate signals of *uniform* speed into a single DS0 output.

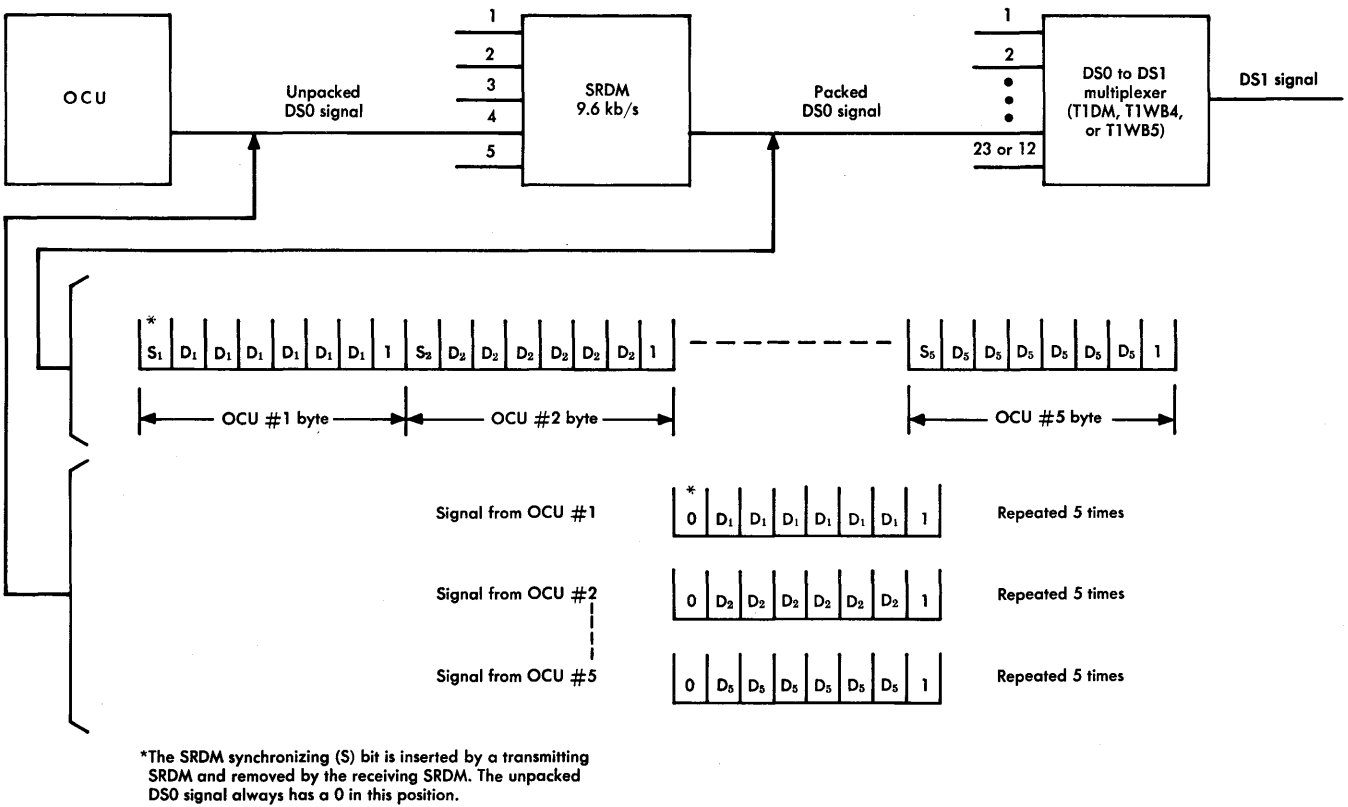

*The SRDM synchronizing (S) bit is inserted by a transmitting SRDM and removed by the receiving SRDM. The unpacked DS0 signal always has a 0 in this position.

Figure 18-7. Example of first multiplex stage for a 9.6 kb/s SRDM.

The output of a subrate data multiplexer is routed to the input of a DS0-to-DS1 multiplex stage. After a packed DS0 signal has been demultiplexed by a receiving SRDM, the resultant unpacked DS0 signals may be reapplied to other subrate multiplexer inputs for repacking in order to route DDS traffic in different directions efficiently.

Multiplex Stage, DS0 to DS1. Separate DS0 signals (either from office channel units, from submultiplexers, or from both sources) can be multiplexed into a 1.544 Mb/s DS1 signal using one of two available types of multiplexer; the choice depends on such factors as the numbers of DS1 signals to be transmitted and the number of DS1 channels available.

Data Multiplexer. The T1DM multiplexer is used where a large number of data signals are to be transmitted on a DS1 channel. The entire DS1 channel is then dedicated to DDS service. As shown in Figure 18-8, the T1DM accepts up to 23 DS0 signals and combines one byte from each signal into the first twenty-three 8-bit channel slots of the DS1 frame. The 24th channel slot of the frame is reserved for the T1DM to insert a special synchronizing byte as shown. Six of the synchronzing byte pulse positions contain a unique code repeated in each frame. Logic circuits in the T1DM monitor both this pattern and the framing (F) bit pattern (identical to that of a D3-type bank) to determine when synchronization is lost. This combined synchronization scheme is virtually immune to simulation by a single data signal. Moreover, because of the overall redundancy, up to

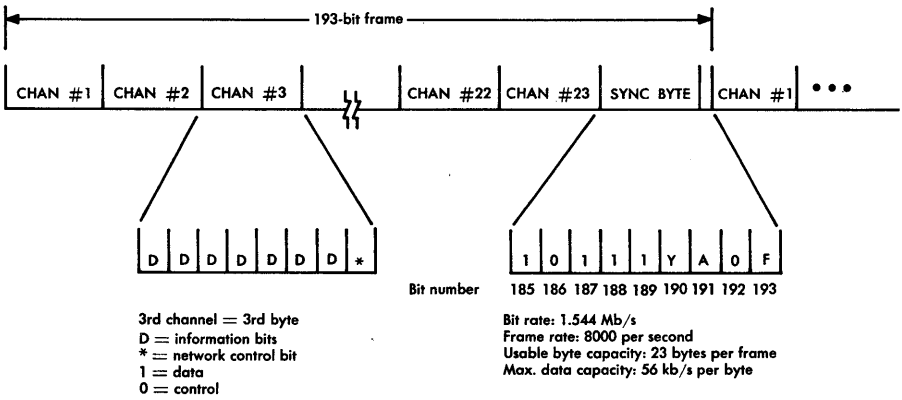

Figure 18-8. T1DM frame format.

4 out of 12 successive frames may contain at least one error in the seven synchronization bits per frame before an out-of-synchronization processing sequence is initiated.

Bit positions 190 and 191, although part of the synchronizing byte, are not used for synchronization. Position 190 (the Y bit) is normally a *1* and is used to alarm the far-end T1DM (yellow alarm) in the event the near-end T1DM is out of synchronization for more than 300 milliseconds. Position 191 (the A bit) provides an 8 kb/s channel for transmitting additional alarm information.

Data-Voice Multiplexer. The T1 data-voice multiplexer (T1WB4) is used for a data load equivalent to 12 or fewer DS0 signals on a given DS1 channel. Three modes of T1WB4 operation are shown in Figure 18-9. In the combined voice-data mode, the T1WB4 accepts a partially filled voice-multiplexed DS1 signal from a D-type channel bank; up to 12 DS0 signals may be inserted in unused voice-channel slots. Any 12 of the 24 channel slots may be used for DDS signals. However, the slots so used must be pre-assigned and the proper options selected at the T1WB4 channel units. The combined DS1 signal is intercepted at the far end by a second T1WB4 and the DS0 signals are demultiplexed before the DS1 signal is sent on to the receiving D-type bank. To maintain overall DDS synchronization, the voice channel bank must be located near the T1WB4 and must be equipped for external timing at hub offices and looped timing at local offices.

Unlike the T1DM, the T1WB4 synchronizes only on the F-bit sequence. While not as rugged as the T1DM synchronizing process, simultaneous logic comparison of the main alternating framing sequence pattern and the interleaved subframe pattern prevents the T1WB4 from falsely locking onto a data sequence which might simulate one or the other individually. The recognition of three or more errors out of five bits in the main framing sequence pattern begins the out-of-synchronization process. If the incoming signal returns to a good condition, average synchronization recovery time is about 15 milliseconds. An out-of-synchronization code is transmitted from all data channel unit receivers if the T1WB4 remains out of synchronization for 400 milliseconds or more.

Alarm logic is provided so that T1WB4s inserted between D-type channel banks, as in Figure 18-9(a), are independent of and transparent to the D-type channel bank alarm system. The T1WB4s can

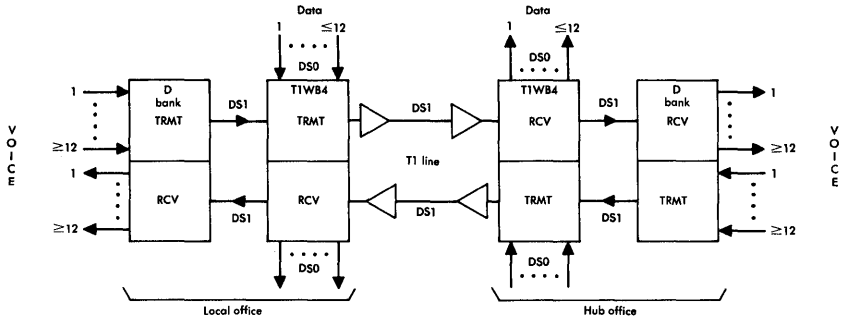

(a) Combined data-voice operation

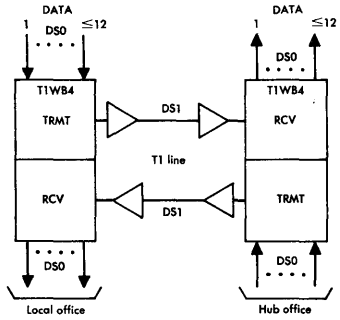

(b) Independent data operation

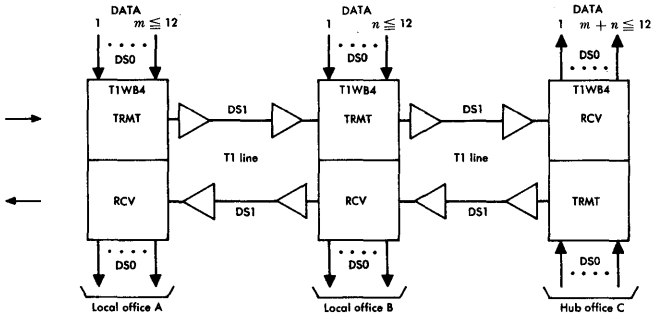

(c) Chained data operation

Figure 18-9. Operating modes of T1WB4 data-voice multiplexer.

establish properly framed signals and continue data operation in the event of a D-type bank failure. The DS1 signals continue on so that the normal alarm operation occurs in the D-type banks.

A pair of T1WB4s may also be operated independently of voice channel banks but with the same maximum of 12 DS0 channels as shown in Figure 18-9(b). While this option may make less efficient use of the DS1 channel than the T1DM, the T1WB4 arrangement is less expensive for small DDS offices since it is not equipped for automatic port failure detection and restoral and has its own integrated timing supply. The T1DM has port protection and requires timing from a collocated timing supply.

Figure 18-9(c) shows a *chaining* mode of T1WB4 operation, useful where more than one local office may be connected to the hub office via DS1 facilities in tandem and where the combined total load of m plus n DS0 signals is equal to or less than 12. Chaining precludes combined voice-data operation. The chaining mode of operation offers economy in some situations since DS1 signals from a local end office need not be demultiplexed at an intermediate office.

A data-only multiplexer, the T1WB5, usually operates with a T1DM. It is used for light-route applications and for chained operation. Used in this manner, it is capable of transmitting 23 DS0 signals.

Cross-Connect Facilities. Two cross-connect fields for DS0 signals are established at hub offices. Both utilize a universal 64 kb/s cross-connect frame. One field, designated DSXOB, interconnects all cross-office paths between DS1 multiplexers and subrate data multiplexers or directly multiplexed office channel units. The second field, designated DSXOA, provides serving test center access to the unpacked side of subrate digital multiplexers and directly multiplexed office channel units.

Short-Haul Digital Facilities. The T1 repeatered line is being used as the principal DS1 short-haul digital facility; however, other short-haul digital facilities capable of carrying DS1 or higher-level signals in metropolitan areas may also be utilized. In order to meet DDS availability and maintainability requirements, T1 repeatered lines utilized for DDS require stringent protection and maintenance provisions that may exceed those provided for T1 carrier systems used for ordinary telephone service. In addition, qualification tests are required to assure meeting performance requirements.

Long-Haul Digital Facilities. The principal digital facility for long-haul DDS service is the 1A Radio Digital System (1A-RDS) also known as data under voice (DUV) [9]. By special processing, the 1A-RDS adds one DS1 signal below the band of the existing FDM message load over each radio channel in a long-haul radio route. Thus, up to 18 DS1 signals can be added per microwave radio route without displacement of existing voice channel capacity. Applications of the 1A-RDS require the use of the U600 mastergroup terminal in which the lowest frequency is 564 kHz. These radio channels meet all quality, availability, and maintainability requirements for long-haul DDS facilities.

Several systems of higher capacity than the DS1 bit rate are available to provide DDS service. The T1C carrier system transmits two DS1 signals multiplexed into a 3.152 Mb/s bit stream over transmission media and distances similar to those of the T1 system and in a similar environment. The T2 Carrier System can transmit a DS2 (6.312 Mb/s) bit stream on low-capacitance cable over distances up to about 500 miles and the T4M system transmits a DS4 signal at 274.176 Mb/s (168 multiplexed DS1 signals) over coaxial cable facilities. In addition to these systems that utilize metallic media, there are two microwave radio systems of Bell System design available. The 3A Radio Digital System (3A-RDS) transmits a DS3 signal at a 44.736 Mb/s rate over microwave radio faciilties that operate at 11 GHz. Up to 28 DS1 signals can be multiplexed into this bit stream. The DR 18A system operates at 18 GHz to provide a DS4 signal in a metropolitan area environment. All these systems meet the DDS service objectives. There are a number of digital cable and microwave radio systems manufactured outside the Bell System that may also be used for DDS service.

18-2 DESIGN REQUIREMENTS

The planning and implementation of DDS in a metropolitan area requires a rigid set of engineering rules in order that service objectives may be met. Some of the major engineering considerations which affect planning include network synchronization, maintenance, restoration, and local loop design.

Network Synchronization

A timing network, to ensure that all DDS signals at DS1 rate and below are synchronized, is crucial to the operation of the system.

Loss of timing in any portion of the network could cause bit sequences to be skipped or read twice (called *slip*) ; therefore, subsequent transmission between stations in that portion and stations in the rest of the network would be garbled. Special synchronization equipment for DDS in the portions of the hierarchy operating at rates higher than DS1 are not required, since the stuffing and multiplexing schemes used in standard digital hierarchy modems allow timing recovery for all DS1 signals at the far end of such facilities.

The DDS timing control network, shown conceptually in Figure 18-10, is a tree-like structure with no closed loops. It consists of a master timing supply, nodal or secondary timing supplies (in hub offices), and local timing supplies (in local offices with T1DMs). The T1WB4/5 integrated timing supplies, in local offices without T1DMs, are also part of the timing hierarchy. Although not shown

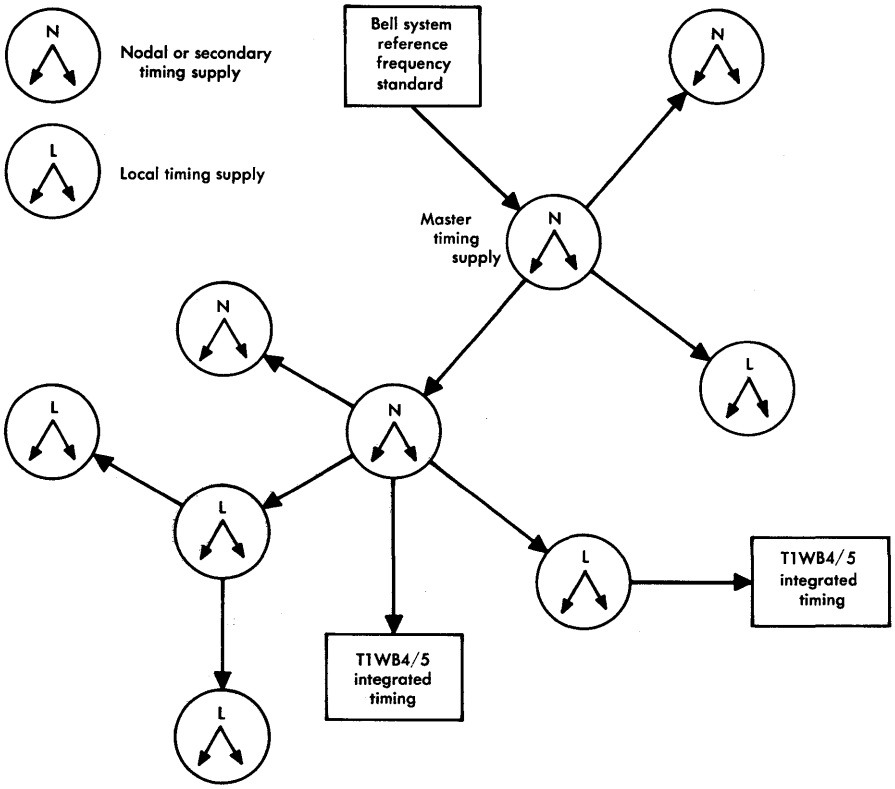

Figure 18-10. Synchronous timing network.

in the figure, the timing control network extends to the customer premises since the service-speed clock rate is derived from the incoming baseband signal.

The master timing supply is physically a nodal timing supply slaved to the Bell System Reference Frequency Standard. All other nodal timing supplies are slaved to this master. Only one incoming DS1 signal is designated for synchronization but facility protection switching normally ensures continuity of the synchronization path. Local and T1WB4/5 integrated timing supplies are slaved to hub office supplies in a similar manner except that primary and alternate working T1 lines, over separate routes from higher to lower offices, are designated for timing purposes whenever possible. Where multiple lines exist, they must originate in the same higher office to avoid the creation of a closed loop.

Figure 18-11 is a block diagram of the nodal, secondary, and local timing supplies. The timing supplies are made up of redundant interface units, phase locked loops, and output circuit sections. Each interface unit extracts the framing signal from its incoming DS1 signal ahead of any multiplexers. The working interface unit (determined by the position of the *a* contacts) delivers the resulting signal to both phase locked loops. Each phase locked loop contains a very stable oscillator which is synchronized to the input signal from the interface

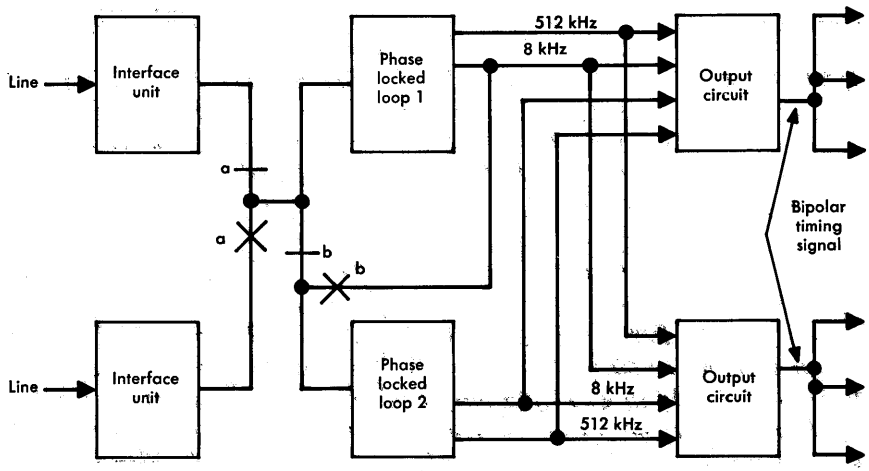

Note: Only signal paths are shown.

Figure 18-11. Timing supply block diagram.

unit and also contains circuitry to produce 512 kHz and 8 kHz output signals. These phase locked signals are redundantly fed to the output circuits. Each circuit produces the special 62.5 percent duty cycle and the modified bipolar timing signal with both 8 kHz (byte) and 64 kHz (bit) timing components as shown in Figure 18-12. The composite timing signal is redundantly distributed (over cable pairs in separate sheaths) to a bay clock power and alarm unit, one of which is located in each bay of DDS equipment. This unit derives separate 8- and 64-kHz signals for intrabay distribution over shielded, twisted pairs. If both interface units fail, the *b* transfer contacts operate. Under these conditions, phase locked loop circuit 1 runs free but phase locked loop circuit 2 is synchronized to circuit 1.

The major difference between the nodal and local timing supplies is the stability of the phase locked loop oscillator and the complexity of the associated circuitry. If the external clock source is interrupted, the oscillator in the nodal timing supply is stable enough to continue to supply useful timing information for at least two weeks at a worst case slip rate of only one T1 frame every 24 hours. Therefore, the section of the DDS dependent on this nodal supply could communicate with DDS stations external to that section without severe service degradation and internal stations would suffer no degradation. Oscil-

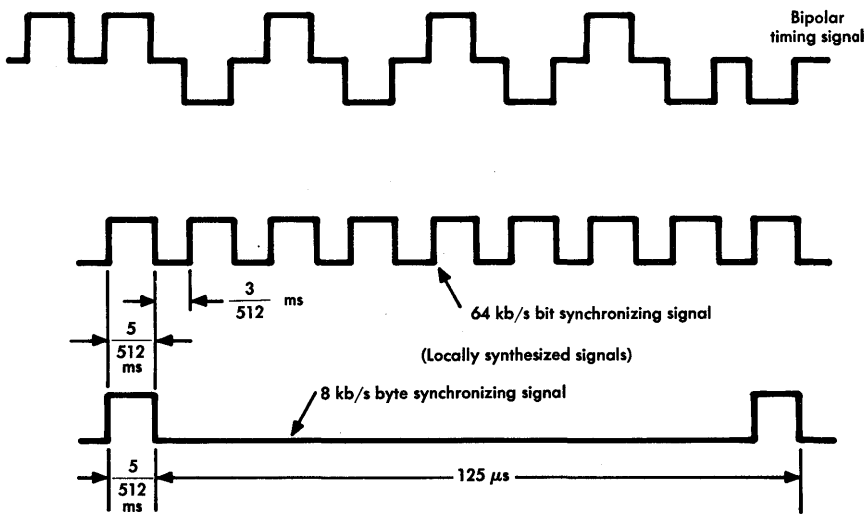

Figure 18-12. Timing supply output waveforms.

lator stability in the secondary and local timing supplies is such that its dependent networks remain slip free for only about 5 seconds when the incoming synchronization signal is interrupted. The local timing supply is less expensive and more compact than the nodal supply; however, it is adequate because of the protection applied to the incoming synchronization signal path. Each T1WB4/5 integrated timing supply provides timing for all DDS office equipment associated with it without need for a separate timing supply.

Network Maintenance and Restoration

A comprehensive maintenance plan is essential to meeting the overall DDS service objectives. Station and central office equipment arrangements and interconnecting digital facilities at all levels of the DDS hierarchy must provide high reliability and the means for prompt restoration of service.

Long-Haul Facilities. The maintenance plan for DDS assumes the availability of the standard automatic protection switching of long-haul coaxial or radio transmission paths, the use of performance monitoring by telemetry, and centralized fault location. In the event of failure of the protection channel, service should be restored by existing methods of emergency broadband restoration within 20 minutes unless an entire route has failed. In-service monitoring and alarming are standard for all portions of the DDS carrying DS1 and higher level signals.

The 1A-RDS terminals are protected on a hot-standby basis with manually initiated switching to the standby terminal in the event of a working terminal failure.

Short-Haul Facilities. Type-T1 lines used for DDS may require one-for-one automatic line protection switching. If so, the two lines are double fed through a bridging repeater with monitors on both lines at the receiving end to control a receiving end transfer switch. Switching to the spare is based on either an excessive bipolar violation rate or the loss of pulses in the regular line. The protection system includes the necessary alarms for status indication. Route (or at least cable) diversity is recommended between regular and spare T1 lines and in no case should both lines utilize the same repeater or share the same power loop. Implementation of DDS also requires that a T1 carrier restoration and control center be established, if not already in existence, in the digital serving area.

Baseband Facilities. Automatic protection switching is not used on baseband facilities. Customer reports, received at the serving test center, initiate fault detection on customer loops and terminal equipment. Office troubles cause alarms to register at various offices or test centers. A maximum restoration time of 90 minutes is the objective for restoring service that has failed due to outages on loop facilities or station terminations.

Serving Test Center. The STC controls maintenance activities for circuits served by the office and for all DDS local office circuits and DDS hierarchy equipment homing on its hub office. The STC is operated by personnel concerned with digital serving area customer circuits. Figure 18-13 shows a typical routing and equipment layout for one portion of a digital serving area. The figure shows that all DDS circuits terminating in the hub serving area are made accessible to the STC at the *unpacked* DS0 rate by routing them through a DSXOA cross-connect field. An exception to this is allowed if a separate STC is established at an entrance point to long-haul facilities. Packed DS0 signals routed through the hub to the long-haul STC need not be routed through the hub DSXOA cross-connect field. Each submultiplex arrangement provided at a given local office is duplicated at the hub office. The DSXOA arrangement includes a universal 64 kb/s cross-connect panel and an associated DDS testboard which contains individual monitoring and splitting jacks to provide maintenance access to each circuit. The testboard also contains test sets to generate DS0 test signals and up to seven control codes for loop-around and straightaway tests. An optional control and test code generator can also be provided for prolonged testing without tying up the digital signal transmitter. It provides the control codes on four outputs and a special audible code with a strong 4-kHz component on six outputs. A clock line-terminating circuit is provided for synchronizing the test sets and a multipoint signalling unit is available for the testing of multipoint arrangements.

Faults occurring in the serving link between the STC and the termination at the near-end customer premises are located by establishing loopbacks at intermediate points in response to coded commands from the STC. Loopback points are found in the service units at the customer premises and at the line side of all office channel units. The loopback commands are transmitted from the STC by control codes. The loopback in the service units are established as shown in Figures 18-4 and 18-5. As indicated on these figures, some of the

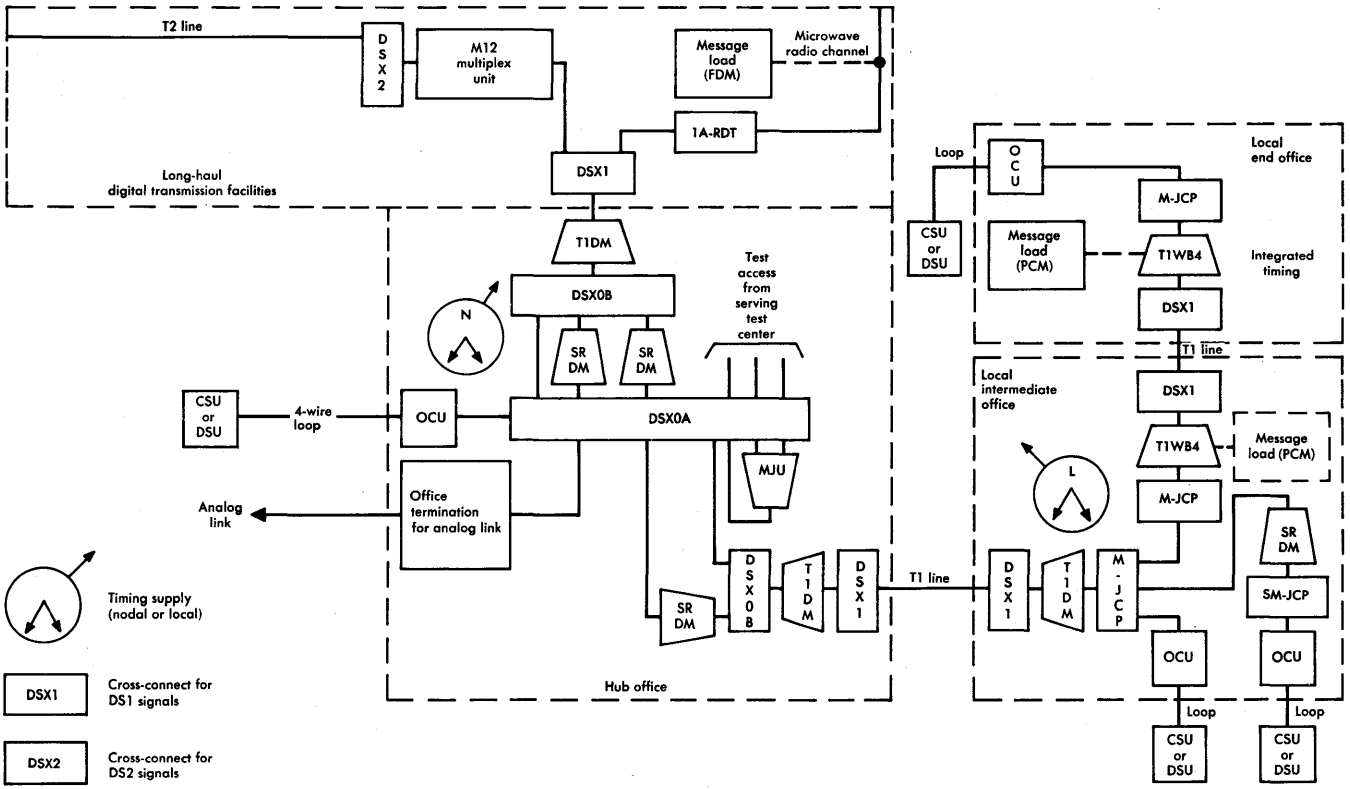

Figure 18-13. Signal distribution in a digital serving area.

commands are actually decoded by the OCU which then reverses the sealing current polarity on the line to initiate the loopback in the service units.

The near-end STC for a circuit between customers served from different hubs can also initiate the same loopbacks at the far end, if required. The objective of loopback fault location is sectionalization of a trouble condition to a major subdivision of a point-to-point link (or to a particular multipoint branch) within 15 minutes.

Additional Maintenance Features. Trouble isolation in DDS multiplexing equipment and transmission terminals of DS1 or higher rank is further aided by a number of other maintenance features. For example, all major components are monitored and alarmed at the offices in which they are located with the exception of office channel units, integrated subrate multiplexers, or individual T1WB4/5 ports. These alarm indications can be transmitted to a distant point by E-type telemetry if registration at the serving test center is desired.

Another maintenance feature in DDS is the provision of monitoring and splitting jacks. All connections between SRDMs or directly connected OCUs and T1DMs or T1WB4s in local offices are routed through a multiplexer jack connector panel (M-JCP). Portable versions of the STC test sets are available for testing at these points. All integrated subrate multiplexers are also equipped with jacks for splitting or monitoring the internal connections between OCUs and the submultiplexer circuits.

As previously mentioned, many DS1 and higher rate short-haul and long-haul transmission facilities are monitored and protected. Monitoring and protection is provided for all T1DMs, T1WB4s (except individual ports), T1WB5s, subrate digital multiplexers, power supplies, and timing supplies; however, there are no protective arrangements for office channel units or integrated subrate multiplexers.

Local Loops

The rms power of the bipolar baseband signal transmitted on customer loops varies in accordance with the peak voltage of the pulses [8] and with the density of *1*s in the customer signal. The maximum allowable power is +6 dBm. Channel service units, data service units, and office channel units contain automatic gain control

or automatic line build-out circuits to permit them to accept incoming signals subject to a range of loop insertion losses and still accurately reconstruct the signal for further processing. For very short loops, a fixed build-out pad is required in addition to the automatic line build-out. The maximum allowable loop insertion loss for operation within error rate requirements is 31 dB at a frequency corresponding to half the service speed (Nyquist frequency).

The maximum DDS four-wire baseband loop length is thus dependent on service speed and type and gauge of available cable pairs. Mixed gauge loops are permissible.

A cumulative maximum of 6 kft of bridged tap is tolerable on DDS baseband loops for all but the 56 kb/s service speed. For 56 kb/s loops, cumulative bridged tap must be limited to 2.5 kft and any single bridged tap must not exceed 2.0 kft.* Insertion losses due to bridged taps must be included in the 31-dB allocation. In addition, load coils and build-out capacitors must be removed from pairs used to provide DDS baseband loops.

Because of the ruggedness of the DDS signal, self-interference or interference from other signals is not a problem when loops are designed according to the previous guidelines. However, due to the relatively high power transmitted, DDS signals do have the potential to interfere with other services in the same cable sheath. Engineering precautions are used to prevent interference from DDS pairs into pairs used for program service, subscriber carrier, or N-type carrier systems.

For the 56 kb/s service speed, the insertion loss constraint for DDS baseband loops of 31 dB at the Nyquist frequency requires the provision of coarser gauge cable in some instances than would otherwise be required to meet either resistance design (1300 ohms) or unigauge design requirements. This may also be true in unigauge-designed plant for the 9.6 kb/s service speed. Moreover, if the office serving the customer (baseband office) is not a DDS local or hub office (multiplex office), the interoffice cable pair between the baseband office and the multiplex office must be included in the overall DDS baseband loop insertion loss calculation.

*The single bridged tap limitation is due to the effect of a 1/4 wavelength resonant stub which would result in an inband dip in the loss/frequency characteristic should a single tap exceed 2.0 kft.

Serving plans must be formulated prior to introduction of DDS to determine the hierarchy of baseband and multiplex offices in a digital serving area. Baseband offices must be chosen with consideration both for efficient access to multiplex equipment and for the baseband transmission range for the most stringent subrate speed (9.6 kb/s). Therefore, some portions of the digital serving area may not be within the 31-dB baseband loop range of any DDS multiplex office for 56 kb/s service. Requests for 56 kb/s service to such locations require either upgrading of one or more baseband offices to multiplex offices or providing service via an analog extension. A regenerative repeater to extend baseband 56 kb/s loop ranges may be used at both central office and remote outside plant locations.

Other Design Considerations

Close coordination of planning, design, and equipment provision processes is required throughout the DDS planning and implementation to ensure that all equipment installed in local and hub offices yields the best network economics consistent with flexibility to accommodate future growth. A detailed and extensive set of guidelines dealing with capacities and options for the various equipment frames, shelves, plug-in units, multiplexer ports, alarms, power, and timing supplies must be followed to ensure compatibility and maintainabiity.

In addition, engineering rules for multiplexing signals for long-haul transmission are needed. Some important considerations are:

(1) Where a serving test center controls through circuits in the same office, the circuits must be routed through a DSXOA cross-connect frame; otherwise, through circuits should have an appearance at DSXOB and/or DSX1 frames.

(2) Only T1DMs are used with long-haul facilities.

(3) The hub office timing supply should be located in the long-haul portion of the hub, since it must be within 50 feet of the T1DM that carries the incoming synchronization signal.

(4) If long-haul facility terminals are not located within intra-office distance limits from the hub office, entrance facilities consisting of dedicated T1 lines or digital radio or coaxial links must be provided to interconnect the T1DM with the long-haul terminal.

Multipoint Service Design

The DDS multipoint service is designed to accommodate a duplex multiparty system in which there is one *control station* (often a computer) and two or more simultaneously connected remote terminals, all operating at a uniform service speed. Multipoint junction units are employed in one or more hub offices to link the branches together, as shown in Figure 18-14. Incoming from the control station, the DS0 bipolar NRZ signal from the DSXOA cross-connect frame is converted by the junction unit to unipolar format. The signal is regenerated and retimed, bridged to four outputs, and each working output is reconverted to the bipolar NRZ format for connection back through the DSXOA frame to the remote terminal branch facilities. Since each remote terminal receives the same signal, the control station must provide coding for address identification.

Incoming from the branches, the multipoint junction unit converts the bipolar NRZ signals from the DSXOA frame to unipolar and connects them to a logic circuit which includes regenerators, control logic, and an adder. The one input signal that contains data is retimed

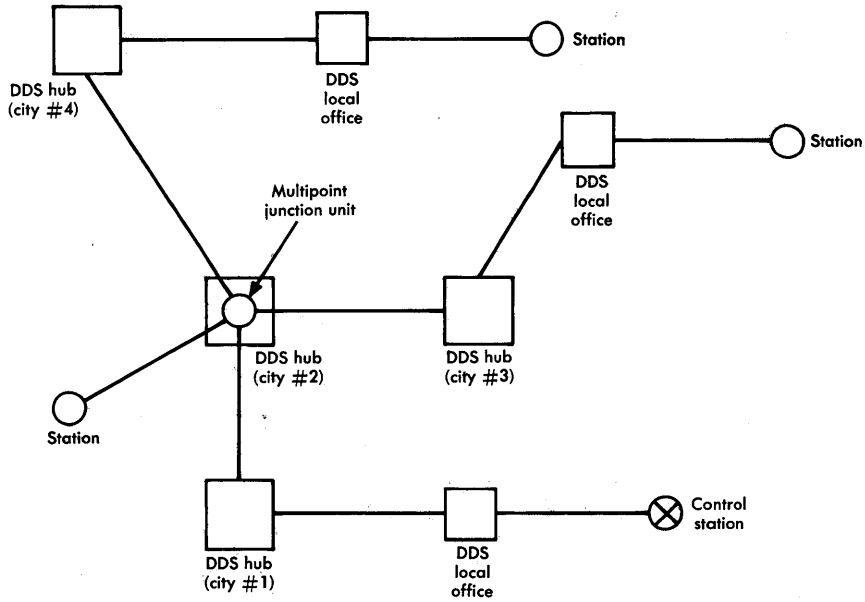

Figure 18-14. A four-station multipoint circuit.

and reconverted to bipolar NRZ for connection through the DSXOA frame to the control station facilities if the remaining channels are transmitting the idle code or an all *1*s code. The logic circuit substitutes an all *1*s code on a branch input to the adder when that branch transmits a trouble control byte. This feature prevents trouble on one remote branch from interrupting data transmission between the remaining remote terminals and the control station since the all *1*s code is blocked by the adder. Two remote channels may not transmit data simultaneously since the adder may garble such messages.

If more than four total branches require interconnection at a hub, multipoint junction units can be chained to provide additional branch terminations. A multipoint circuit can also include junction units at more than one hub to form a tree network spreading away from the control station. The multipoint junction unit is thus a versatile unit for building up multipoint circuits. Since all inputs are unpacked bipolar NRZ signals at the DS0 rate, the same equipment is used regardless of the multipoint network service speed.

REFERENCES

1. Snow, N. E., N. Knapp, Jr. et al. "The Digital Data System," *Bell System Tech. J.*, Vol. 54 (May/June 1975), pp. 811-964.
2. American Telephone and Telegraph Company. *Telecommunications Transmission Engineering*, Volume 1, Second Edition (Winston-Salem, N. C.: Western Electric Company, Inc., 1977), Chapters 14, 18, and 21.
3. Bell System Technical References PUB 41302 and PUB 41302A, *Wideband Data Stations, 303-Type Interface Specification* (American Telephone and Telegraph Company, August 1966; Supplement 1, March 1969).
4. Bell System Technical Reference PUB 41021, *Digital Data System — Channel Interface Specifications — Preliminary* (American Telephone and Telegraph Company, March 1973).
5. Bell System Technical Reference PUB 41005, *Data Communications Using the Switched Telecommunications Network* (American Telephone and Telegraph Company, May 1971), pp. 9-10.
6. Bell System Technical Reference PUB 41008, *Analog Parameters Affecting Voiceband Data Transmission — Description of Parameters* (American Telephone and Telegraph Company, October 1971), pp. 22-24.
7. Bell System Technical Reference PUB 41450, *Digital Data System — Data Service Unit Interface Specifications — Preliminary* (American Telephone and Telegraph Company, March 1973).

8. Engineering Department, Electronic Industries Association, *Interface Between Data Terminal Equipment and Data Communication Equipment Employing Serial Binary Data Interchange — RS-232-C* (Electronic Industries Association, Washington, D. C., Aug. 1969).

9. Muench, P. E. and R. J. Blackburn. "The Bell System Digital Data Service," *Telephony* Magazine (Apr. 24, 1972).

Telecommunications Transmission Engineering

Section 5

Transmission Management

Maintaining and improving message network transmission quality requires dynamic measurement and evaluation of its performance because properly designed telephone plant may not be properly installed and can not provide satisfactory transmission quality indefinitely. It is necessary to examine overall service from the customer point of view (external measurements) and to measure and evaluate the performance in quality control of the working plant (internal measurements). Furthermore, it is necessary to interpret and respond to changes in both network performance and customer satisfaction.

Chapter 19 discusses measurement plans, the statistical nature of performance observations, the derivation and uses of quality indices, and the need for both internal and external measurements. The results of the measurements are useful for monitoring the quality of transmission over any portion or all of the telecommunications network. Among the external measurements of transmission quality are customer reports of satisfaction or dissatisfaction expressed during telephone interviews or in trouble reports. The telephone service attitude measurement (TELSAM) plan is described with emphasis on the transmission aspects and the analysis of trends of transmission performance. Customer trouble reports and the customer trouble report analysis plan, which includes the analysis of reports, detection of weakspots, and observation of trends, are discussed and the function of the network trouble analysis bureau is reviewed. The transmission performance index, which is based on internal measurements of transmission performance, is described. The indices used to determine overall quality include the trunk transmission maintenance index, the connection appraisal index, and the subscriber plant transmission index. The possible inclusion of a station transmission index and a special services transmission measurement plan is discussed.

The management of transmission quality requires maintenance of the immense network of transmission facilities and equipment which provide the circuits in the switched message network and which provide a wide range of switched and nonswitched special services. Chapter 20 describes the principles upon which maintenance is based and discusses various aspects of manual and automatic facility and circuit maintenance. The chapter also relates maintenance to reliability and discusses some specific ways in which the basically reliable facilities are supplemented by manual and automatic means of protecting against failure. The temporary emergency restoration of failed facilities by the utilization of protection equipment and facilities is also discussed.

Achieving and maintaining satisfactory transmission performance in the message network is accomplished only with considerable current planning of day-to-day activities and fundamental planning for long-haul service and performance objectives. Chapter 21 describes these planning functions as additional means of managing the transmission performance of the network.

Chapter 22 provides a summation and overview of the management processes and the techniques employed to maintain control of the network in the face of the continuous changes that take place. The importance of the grade-of-service concept and the need for continuous monitoring and surveillance of performance and customer opinions are stressed. The chapter concludes with comments regarding the importance of the continuing technical education of those responsible for transmission management.

Chapter 19

Measurements and Indices

Transmission management of the telecommunications network requires the measurement of customer opinions regarding the quality of service rendered, the measurement of transmission performance, and the establishment of transmission objectives consistent with the overall objective of supplying good service at a reasonable price. The establishment of useful relationships among these considerations and the vigorous implementation of transmission improvements within the limitations of fiscal responsibility are required. This chapter provides a broad review of how customer opinions and plant performance are measured. Since customer opinions are highly subjective and transmission performance is quite objective, different measurement approaches are used.

The differences between the two processes that must be implemented have led to definitions here of the opinion measurements as *external measurements* and of the performance measurements as *internal measurements*. This follows naturally from the fact that opinions about service originate from sources external to the Bell System while performance measurement programs originate and are carried out within the Bell System.

The measurement program results are analyzed and reviewed to provide guidance to one of several lines of action. The correction of performance deficiencies and possible changes in transmission objectives must be considered. The possibility of no action must also be considered carefully, i.e., leaving well enough alone when performance, cost, and customer opinion are in good balance.

The volume of data collected during these measurement programs is too great to be of use without further processing, combining, and simplifying. For the purpose of providing management evaluation and control of transmission quality, the data are converted into indices which can be applied to different parts of the network as running indicators of performance. When these indices show poor or deteriorating performance, additional measurements may be made or the original data may be examined in greater detail to determine the cause of trouble.

Transmission indices are made up of a number of components representing such parameters as noise, loss, or balance which may apply to different parts of the plant, such as local or toll trunks. The measurements related to these indices now apply only to the switched message network. The use of transmission indices for special services evaluation is under study.

19-1 EXTERNAL MEASUREMENTS

External measurements are obtained by surveys of customer opinions derived from interviews and reports of service difficulties regarding telephone service. Customers expect connections to be established promptly on the first attempt, assistance to be furnished courteously and with dispatch, telephones to be installed properly with a choice of features, and billing to be accurate. In the final analysis, transmission is the essential product furnished by the Bell System. Basically, customers pay for the ability to transmit information accurately and are not satisfied if transmission is poor regardless of the excellence of other service features.

Information must be made available constantly to indicate the reaction of telephone service users to the grade of service they are being furnished. The information is obtained by regularly conducted service attitude measurement surveys and by customer reports of service difficulties. These are reviewed and summarized regularly to gain insight into the nature of troubles encountered. Three customer-generated indicators, service attitude measurement, customer requests for credit, and customer trouble reports reflect customer reaction to service. These indicators may or may not correlate with internal measurements.

Service Attitude Measurement

The telephone service attitude measurement (TELSAM) plan is a service evaluation based on the questioning of customers about a wide variety of service criteria including transmission. Replies are summarized to permit analysis of the degree of customer satisfaction with each service criterion and to identify trends. The plan utilizes telephone interviews on a sampling basis to determine the reaction of customers to all facets of their telephone service. The interviews are conducted by an independent organization using lists of customers provided by the telephone company. Five basic questionnaires are used. These relate to recent customer contacts with company personnel and to various telephone service criteria. Results are accumulated by the independent interviewing organization, are summarized in a central location by AT&T, and are made available to management in the administrative unit or territory surveyed.

The TELSAM plan replaced the original service attitude measurement (SAM) plan which made use of questionnaires mailed to customers. The new plan offers a more efficient use of customer time, a more realistic appraisal of service, more flexibility in handling the introduction of additional questions, and economy in the total operation.

Sampling. The interview questionnaires explore five basic aspects of company-customer interrelationships: business office, installation, repair, operator-handled services, and dial services (including coin). A sample of business office, installation, and repair interviews are conducted as soon as possible after the customer has contacted the business office or after installation or repairs have been made. This is done to get the customer reaction immediately after the contact and to create a favorable impression by the promptness of the follow-up.

The sample of operator-handled toll call services is selected from recently issued toll tickets. No specific information regarding these toll calls is made available to the interviewer except that the toll calls were made. Quick follow-up enhances the reliability of the results by obtaining customer reaction soon after the call. The samples for dial call services and coin services are selected at random from the total population of residence and non-PBX business customers.

The recommended monthly sample size for a district is a minimum of 50 questionnaires in each category where previous results are static and up to 150 per month where changes are occurring or anticipated.

For example, changes in equipment arrangements, modifications in administrative policies, deteriorating survey results, or adverse local conditions all require the closer scrutiny that results from the larger sample size.

The questionnaire covering transmission quality is the dial call service questionnaire. In this series of questions, the interviewer asks the customer to rate the quality of recent telephone calls. Calls rated poor or fair are discussed further to determine by a sequence of questions the specific cause for complaint. The TELSAM questionnaire can be expanded by adding new questions where a particular facet of service needs further examination.

The answers to questions about the nature of trouble encountered provide information regarding poor transmission (difficulty in hearing or being heard, fading, clipping) and noise (in categories such as regular or musical tones, other voices on the line, echo, and distortion). The interviewer also determines if the complaints arise from local or toll calls. If comments indicate that special attention is required, they are forwarded to the telephone company for immediate review and possible action.

Reports and Analysis. The data collected by the TELSAM interviews are processed in a central computer programmed to produce a number of types of reports. District reports summarize answers to each question for the current month, a rolling average for three months, and changes since the last report. Summary reports show the overall customer reaction toward various aspects of service. Significant change reports permit quick identification of districts or service aspects which might be candidates for larger sampling and closer scrutiny. Special question results reports cover added questions.

The TELSAM plan measures service as seen by the customer and complements internal measurements. The internal measurement plans are the basic feedback for determining how well prescribed practices and procedures are carried out. The TELSAM plan reflects customer evaluation of the service resulting from these practices and procedures.

It is reasonable to expect that not all customers agree with company judgment of what is good or bad, important or unimportant; the various viewpoints in different locations are also reflected by TELSAM. Trends observed in TELSAM should be used to detect

signs of transmission weakness and the effect of transmission improvement measures. Data from the internal measurements are used to determine the course of corrective action.

Trouble Reports and Requests for Credit

Another significant external indicator is the customer trouble report. When service has deteriorated to the extent that the customer experiences difficulty, repair service or an operator is contacted. Transmission complaints are classified as Code 3 and are summarized on the basis of the number of reports per 100 stations per report period. In addition, a considerable amount of material processed by the DDD service bureau reflects customer service difficulties.

A customer trouble report is any oral or written notice which indicates difficulty or dissatisfaction with the performance of telephone plant or employees, improper functioning of telephone company equipment or associated customer-provided auxiliary equipment, or dissatisfaction with the physical condition, location, or appearance of plant. Since these reports cover such a wide variety of troubles and complaints, they are classified in various ways to facilitate analysis.

Most customer complaints and trouble reports are recorded at the plant service center. The card used as a trouble ticket is divided for convenient indication of the required information. Manual or automatic (optical) sorting for analysis is facilitated by appropriate punching or notching of the card.

The trouble tickets are arranged to display a large amount of information. Information that is needed for response to the immediate complaint (customer's name, address, equipment identification, etc.) is entered and space is provided to indicate the originating source of the complaint (customer direct, customer relayed, employee, etc.) and a number of service quality indicators such as a missed appointment or a subsequent report. Space is also provided to indicate the cause of the complaint (man-made, plant or equipment, weather, etc.) and for written entries to indicate the final resolution of the reported problem. Miscellaneous data to identify the central office, month of the report, and special study information are also recorded.

Significant data, from the transmission point-of-view, are: (1) those that identify the class of service involved in the complaint such as residence, business, centrex, or coin, (2) a number of class-of-

service subgroups such as party line, foreign exchange, customer-provided equipment, and (3) the disposition of the report by classification according to station set, outside plant, central office, "found OK," etc. Most useful for transmission analysis are the codes devoted to classifying the complaint by type of report. These codes, assigned on the basis of the description of the problem given by the customer to the report center, are defined as follows:

CODE	REPORT TYPE
1	Can't call, no dial tone
2	Can't call, other
3	Transmission, noise
4	Can't be called
5	Memory service failure
6	Data failure
7	Physical condition
8	Miscellaneous

Among these report types, Code 3 and Code 6 are most likely to reflect transmission type troubles and are carefully analyzed for their causes. Code 3 reports include complaints such as "can't hear," "can't be heard," "distortion," "cutoffs," "momentary interruptions," and "noise." Code 6 includes reports from customers who cannot send or receive data and reports resulting from failure of automatic call units. Code 2 and Code 4 reports must be examined for possible transmission-related signalling problems.

The customer trouble tickets are analyzed by the plant service centers. Summaries of the analysis are distributed on standard forms called customer trouble report summaries. The coded report categories are summarized on this report form as "customer trouble reports per 100 stations." By monitoring successive reports, trends of deterioration or improvement can be observed. Furthermore, the transmission trouble rates can be observed for specific sections of a territory.

Customer requests for credit are also a source of information relating to transmission performance. Customers often ask an operator to cancel charges because conversation was not possible on an established connection. Although not yet a component in a measurement plan, customer requests for credit are nevertheless valuable indicators of serious problems, particularly when the reasons for requesting credit are transmission-related.

Customer Trouble Report Analysis Plan

The customer trouble report summary just described is useful for detecting weak spots on a general basis and for observing trends. The customer trouble report analysis plan (CTRAP) is a method of analyzing trouble reports in more depth, either on a manual or mechanized basis. It consists of assembling the information recorded on customer trouble tickets in an organized manner to find the cause of trouble or customer dissatisfaction.

Analyses by CTRAP may be stimulated by observation of adverse trouble rate trends in the analysis of customer trouble report summaries or by observation that these summaries show significantly poorer performance in one administrative unit than in others. The capability of CTRAP to collect and classify masses of data makes it possible to solve specific problems. Engineering personnel should be aware of this capability and may find the need to participate in additional studies with plant personnel for the mutual solution of transmission-related problems.

Network Trouble Analysis Bureau

The need for trouble data collection, analysis, and dissemination is met by the network trouble analysis bureaus set up in operating companies with participation by many departments and by Long Lines Department area representatives and independent company relations coordinators. Each bureau is composed of two groups dedicated to the improvement of direct distance dialing (DDD) service. These groups are known as the DDD service bureau and the DDD task force.

The DDD Service Bureau. This bureau has the responsibility for collecting, integrating, and analyzing trouble reports for its control area. After analysis, trouble patterns are reported to the proper organizations for correction. To fulfill its responsibilities, the DDD service bureau performs the following functions:

(1) Analyzes ineffective call attempts determined from service observing data.

(2) Receives and analyzes operator-relayed DDD and dial switched access (DSA) trouble reports. These reports are among the major inputs to the bureau.

(3) Analyzes connection appraisal data*, credit requests, and operator reports of poor transmission and noise to establish a broader base for analysis. Connection appraisal test calls which meet with difficulty are sometimes reported to the bureau as they occur.

(4) Analyzes pre- and post-billing credit requests which sometimes indicate the nature of customer problems such as reaching a wrong number, poor transmission, or cutoffs. These requests are summarized by computer in both originating and terminating listings.

(5) Conducts limited holding and tracing of operator-reported plant troubles in its area of operation.

(6) Conducts selective call-through testing on a limited basis to assist in determining the condition or performance of a particular route or termination. Both operational and transmission tests are performed.

(7) Participates at times in supplementary service observing activities.

With the introduction of the Traffic Service Position System (TSPS), a procedure has been initiated in the Bell System to handle the operator-keyed trouble reports on a centralized basis. This procedure is implemented by the Network Operations Trouble Information System (NOTIS). This automated system permits the collection from 75 locations in the switched network of over 150,000 operator trouble reports per average business day, a volume of data that is increasing. The data are batch-processed daily and the resulting trouble patterns are forwarded to 77 analysis bureaus throughout the Bell System. The daily reports, together with special summaries and studies, are effective tools in locating and correcting network problems.

A number of other DDD service bureau functions relate to the analysis of data for the detection of equipment irregularities, record errors, customer errors, and suspected fraud cases. The bureau may

*These data are derived from measurements of loss and noise on network connections.

also handle trouble reports from customers and from the special operators assigned to wide area telephone service (WATS), data service, and international dialing.

It is evident that a considerable amount of activity in the DDD bureau is related to transmission performance. Transmission engineering requires familiarity with bureau operations and involves working closely with the bureau to improve transmission performance.

The DDD Task Force. This group, composed of representatives from all departments involved in the control of network performance, meets regularly to aid the DDD service bureau when efforts to correct a trouble condition have not been effective. The primary responsibility of the task force members is to ensure that the bureau is receiving the appropriate interdepartmental support in its trouble detection and correction activities.

19-2 INTERNAL MEASUREMENTS

Internal measurements consist of planned measurements of specified transmission parameters of the switched message network. The results provide the basis for computing performance indices used to evaluate telephone transmission in various administrative units of the plant on a comparison basis. These indices are applied only to the message network; they have not yet been developed for the evaluation of special services.

The overall Bell System transmission objective is to meet customer needs as nearly as possible within the limits of economic choice. When an index shows poor or deteriorating performance, the data that was used to compute the index must be analyzed to determine the cause of trouble and to guide the course of corrective action. The comparison of indices and the analysis of results are tools that assist in determining whether overall objectives are being met. Transmission objectives for the network are derived by procedures which, in total and by individual steps, involve the compromises necessary to meet grade-of-service objectives economically. The procedures may be regarded as beginning with the translation of grade-of-service objectives into transmission objectives applicable to various segments of the plant such as loops, local trunks, toll connecting trunks, intertoll trunks, etc. Finally, the transmission objectives must be allocated to these segments of the plant in some logical manner.

In order to relate the measurements to the established transmission objectives, programs must be set up to measure the impairments in such a way that performance and objectives may be compared. The comparison process is based on measurements and tests that are practicable, i.e., loop noise, trunk maintenance, and connection appraisal, as illustrated in Figure 19-1. These performance indicators are similar in that all are based on data taken, by means of transmission measuring equipment, by plant and/or engineering forces. The loop noise, trunk maintenance, and connection appraisal programs are carried out periodically by each operating company in the Bell System as part of the continuing evaluation of transmission performance within various operating units. These measurement programs are valuable for assessing the performance of various administrative units relative to one another and relative to established objectives. Additional transmission surveys of specific parts of the plant are conducted as necessary to establish mathematical models of the plant and its performance and to provide input to the continuing process of evaluating objectives. The surveys and models permit the study and evaluation of the network as an overall system. In recent years, significant surveys have been conducted of speech volumes [1], loop plant transmission characteristics [2, 3, 4], intertoll trunk transmission performance [5], and overall toll connection performance [6, 7, 8, 9, 10]. Of interest also are a study of network capability for data transmission [11] and a study of noise data together with the development of a model for impulse noise [12]. These surveys and studies are not used as index indicators of performance but they can be used to check for consistency with reported index results.

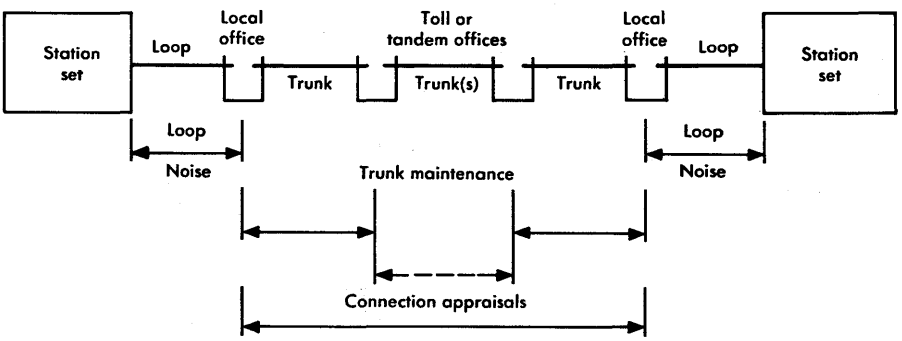

Figure 19-1. Internal measurements.

Subscriber Plant Transmission Tests

The only transmission tests of subscriber plant (loops) made for index purposes are noise measurements. These measurements are often scheduled to coincide with connection appraisal tests. Where there is a significant amount of tester travel required, efficient use of time is obtained when both sets of tests are made during one trip to a central office.

Transmission measurements on loops are complicated by the difficulty and cost of obtaining access to the station set end of a loop. Noise measurements are made at main distributing frames or equivalent locations, depending on the type of office. Only steady-state noise is recorded; occasional high noise peaks are ignored. The central office measurements, made with 3-type noise measuring equipment with C-message weighting, are recognized as a compromise based on studies comparing noise measured at an off-hook station set with noise measured at the central office with the station set on hook. The measurements are made with station sets on hook.

Loop noise measurements provide an indication of overall performance, provide performance comparisons between various administrative units of plant, and indicate areas where further investigation and mitigation programs should be applied. Generally, noise measurements are compared with a reference of 20 dBrnc. The objectives are that 95 percent of all loops should have noise less than 20 dBrnc and that the number of wire centers having 15 percent or more noisy lines should not exceed 3 percent.

Loop noise measurements are programmed so that every wire center is scheduled for survey within a two-year period. The centers are listed in rank order by size and are paired so that the largest and smallest, next largest and next smallest, etc., are surveyed during the same quarter. The total number is divided so that the work load is equalized as nearly as possible over the two-year interval.

A sample of loops is selected for measurement within each wire center. If a wire center has fewer than 210 lines, noise must be measured on all loops. If the number of lines is between 211 and 400, all or 210 loops may be selected. If there are more than 400 lines, 210 loops are selected for testing. The sample is prorated by office prefix code where more than one prefix is used.

Telephone numbers are selected at random from the line or station cards maintained at the local test center. To allow for lines which cannot be measured, for instance, those which are busy or in trouble, 210 cards are selected so that the objective of 200 measurements per sample is met. The sample size has been chosen to provide a statistically sound estimate of performance and, at the same time, to schedule work that can be completed in one normal working day.

Subscriber plant noise measurements and the index derived from them are statistically sound indications of performance when applied to a large collection of data, such as comparisons of district or division performance. Unsatisfactory performance must be investigated and a noise mitigation program must often be implemented. Additional measurements in the suspected central office must be made in an effort to determine routes or cables in which poor performance may be concentrated.

High noise in subscriber plant has three common causes that must be considered in a noise mitigation program: (1) cable sheath discontinuities, which usually cause all pairs in the cable to be noisy; (2) imbalanced pairs, often associated with party lines and ringer imbalance; and (3) maintenance or housekeeping problems which affect pairs at random. An analysis of the measurements may be used to determine the magnitude and nature of the noise mitigation program needed.

At this time, there is no standard measurement plan for loop loss. Since there is a considerable amount of activity in extension and rearrangement of the loop plant, an effective interim transmission control can be maintained through completion testing associated with this work-order activity.

Trunk Transmission Maintenance Measurements

The trunk maintenance performance indicator is derived from measurements of loss, noise, and balance made at specified intervals on all trunk types except intrabuilding trunks without gain. Since all trunks are supposed to be measured for loss and noise, the index is weighted according to the percentage of trunks actually measured. Balance measurements are made on only a sample of trunks for which balance requirements are specified. The measurements on local, toll connecting, and intertoll trunks are equally weighted.

Loss and noise measurements may be made by using test systems such as the Automatic Transmission Measuring System (ATMS) ; loss may also be measured and noise checked by the automatic transmission test and control circuit (ATTC) [13, 14]. Measurements may also be made manually from outgoing trunk (OGT) test frames, testboards, etc.

Loss. Much of the ability to identify trunks or connections having poor transmission has been lost with the introduction of direct distance dialing. There is usually no operater to verify satisfactory transmission. With automatic switching, connections are set up, regardless of transmission quality, provided address and supervisory signals are satisfactorily received by the switching machine. For these reasons, it is necessary to have statistical knowledge of the quality of transmission and, at the same time, to know which trunks perform poorly. To acquire the necessary data, all trunks are tested for loss periodically, even though performance could be determined statistically by measuring only a sample; the accumulated data are used to determine the index. In processing the loss data, the difference between the actual measured loss (AML) and the designed or expected measured loss (EML) is determined for each trunk.

For computation of the trunk transmission maintenance index, a distinction is made between two types of trunks: (1) trunks using carrier facilities or equipped with other than E-type repeaters and (2) trunks using E-type repeaters or having no gain devices. Typical loss density functions, $f(d)$, for the two types of trunks are illustrated in Figure 19-2; the abscissa shows the loss deviations, i.e., the difference between EML and AML values. Reference values of loss deviations for use in index computation are shown in the figure at 0.7 dB and at 1.7 dB. The more stable E-repeatered trunks have a smaller spread and are indexed at a deviation value of 0.7 dB. Carrier facilities are indexed on two deviation values, 0.7 and 1.7 dB.

In the discussion of loss deviations, the average loss deviation was assumed to be 0 dB. In any given set of measurements, the deviations are distributed about the average value, which may be shifted positively or negatively from 0 dB. Curves B, C, and D in Figure 19-3 represent shifts of distributions toward successively more positive values relative to reference curve A. Examination of these curves shows that a small shift, such as that represented by the shift from A to B, does not significantly change the total number of deviations

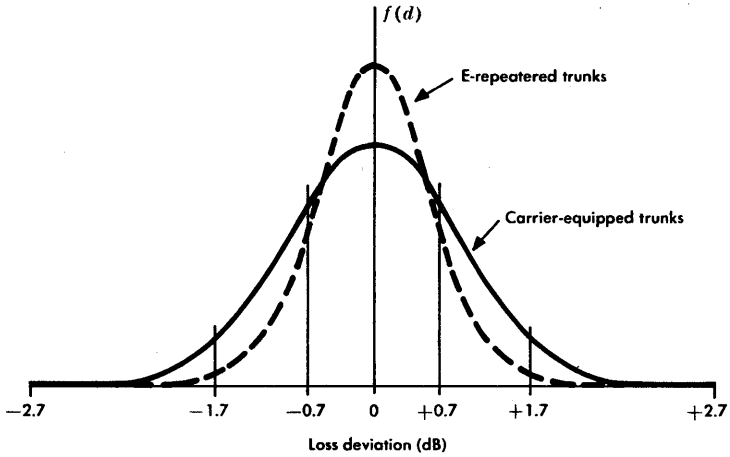

Figure 19-2. Distribution of trunk loss deviations.

exceeding ±0.7 dB. A shift as great as from curve A to curve D, however, makes a large change in the total number of deviations exceeding 0.7 dB. Such a shift would result in a significant reduction in the performance rating, or index.

Trunk losses can depart from nominal design values for many reasons. For example, environmental conditions such as temperature or humidity may change, components may age and deteriorate, and workers may make errors; also, amplifiers, terminal equipment, and radio or carrier channels may be switched to a protection facility. None of these factors can be eliminated economically but their effects on loss variations can be controlled by proper maintenance.

Noise. Message circuit noise, which does not include impulse noise, is measured at specified intervals on all trunks that are measured for loss. These measurements, made automatically or manually, involve only the trunk under test and the switching system transmission paths at each end of the trunk that are required to interconnect the test equipment and the distant end trunk termination. Thus, central office noise is included in the measurements and the prescribed reference values allow for busy-hour office noise. Loop and station set noise are not included in trunk noise measurements.

For the purpose of determining the index, noise measurements should generally be made at both ends of trunks. However, for con-

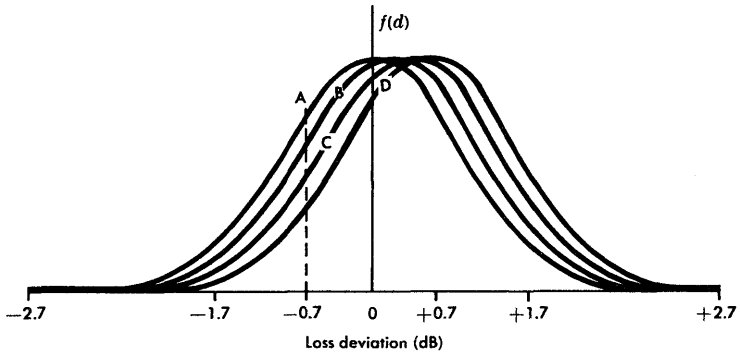

Figure 19-3. Changes in average loss deviation.

venience or economy, two-wire trunks using two-wire voice-frequency repeaters may be measured at the originating end (near end) only. The far-end noise may be estimated by adding the AML to the near-end noise. This technique is not applied to four-wire trunks nor to two-wire trunks using four-wire repeaters; the noise on these trunks is measured at both ends.

Noise measurements are accurate to about ±1 dB. An error of this magnitude may, in some instances, reflect poor apparent performance of an individual entity. However, analyses should reveal the source of error. Overall effects on results in administrative units as large as a district or division are not expected to be significantly biased by such errors since they tend to be random.

Balance. Echo return loss (ERL) and singing point (SP) measurements are made at specified intervals in all class 4 or higher toll offices which have balance requirements. Every such office is surveyed at 1- or 2-year intervals if it has met initial balance requirements and has been certified by the transmission engineering department, as discussed in Chapter 10. Unlike loss and noise measurements, which are made routinely for maintenance purposes, balance measurements are made initially for certification and thereafter are made only for index purposes or for recertification when required, for example, when trunks are added or rearrangements are made.

A balance survey consists of measurements on samples of trunks chosen from each trunk category in the office. The results of the survey indicate either that an office has remained balanced or that

corrective action is required. The indication can usually be obtained with an 0.8 probability of being correct by measuring balance on as few as 20 trunks. When the indication is not clear, i.e., when measurements are marginal with respect to the reference values, 20 more trunks are measured. If there is still not clear statistical indication, the data are used for computing the index but investigation may be judged necessary.

Measurements of balance are taken on a sampling basis for two reasons. First, an office that has been balanced and certified and is relatively stable with respect to growth and changes tends to remain stable with respect to balance. Second, the complexity and time-consuming nature of balance measurements tend to make their administration expensive. Measurement of balance on all trunks may soon be desirable. Data transmission is adversely affected by poor balance and improved technology promises to make such measurements practicable.

Connection Appraisal Tests

The two internal performance indicators just discussed are used to examine individual links (loops or trunks) in the network. The third indicator is one in which several links are measured in a built-up connection, as shown in Figure 19-1. Test connections are established from a local office (class 5) to another local office. Toll calls are selected to reflect the characteristic toll calling patterns in the originating office. Local calls are chosen on a random basis.

Connection appraisal tests involve loss and noise measurements on connections of two types made through the switched network, local connections making up the *local component* and toll connections making up the *toll component*. Each connection also includes the transmission paths through the switching machine. These connections may be established over any number of trunks permitted by the switching plan; therefore, the measurements are oriented toward evaluation of overall connections rather than of individual trunks or types of trunks. Since the paths being appraised are subject to design control, performance can be predicted and compared with measured results.

Several considerations make the inclusion of loop evaluation undesirable. Trunks are readily accessible in central offices for testing while loops are not so accessible, especially at the station set. A

program which would include manual testing of loops would be expensive. On calls between the same two stations, the same two loops are always involved but trunks are selected more or less at random. Thus, it is desirable that network connection evaluations be kept separate from loop evaluations so that separate control can be exercised.

The data needed for determining the connection appraisal index are useful locally in showing good and poor performance in administrative, geographic, or parametric areas, such as noise or loss. The measurements are sometimes useful in pointing out individual trunk transmission trouble conditions not found by trunk testing procedures. System weak spots caused by circuit design deficiencies, improper routing, or substandard installation and maintenance activities may also be identified.

Implementation. The connection appraisal program is administered in most companies by the engineering department. The data are also processed there and at AT&T company headquarters for further use in trouble analysis and for determining the index. The connection appraisal program specifies the method of selection of central offices from which tests are made and the test procedure.

Central offices are selected quarterly for connection appraisal tests. Every large originating entity* in an administrative unit is surveyed once each year; offices having fewer than 2000 connected main stations are surveyed every two years. The selection is random and is made so that some of each type of central office equipment are tested during each quarter.

Offices selected for local component connection appraisal are those from which interoffice local calls can be made on a nontoll basis by flat-rate subscribers. Local connection appraisal tests are not made in those offices in which the entire local calling area is served from a single entity.

Since connection appraisal tests are designed to evaluate the loss and noise of telephone connections, excluding loops and station sets, the originating test line must meet certain requirements. It must be a single-party telephone line having no bridged connections at the

*An originating entity is considered to be an outgoing marker group or decoder group in a crossbar switching system, a single central office of any type, or a combination of central offices in the same or nearby building(s) using common outgoing trunks.

main distributing frame. It should be as direct and as short as conditions permit. These requirements are met most easily by conducting the test from the office being surveyed where the loop length can usually be held to the specified limit of 300 feet.

If this limit cannot be met, loop loss must be determined and used as a correction factor in the processing of the measured data. Other loop requirements include a maximum length of 4500 feet, the removal of all bridged taps, a maximum metallic noise of 0 dBrnc measured at the station set when the loop is terminated in 900 ohms at the main distributing frame, and a maximum noise-to-ground value of 25 dBrnc at the station set.

Testing. Combined test lines that permit a single call for both loss and noise measurements are available at many locations. Repertory dialing instruments are often used to speed the calling but the measurements are taken manually. A plan to mechanize the entire process, using the Centralized Automatic Reporting on Trunks (CAROT) System, is under consideration.

Where such combined test lines are not available, a call must be placed for each loss and each noise measurement. To measure loss, a specially assigned number in each terminating central office is dialed. When the connection is made, a single-frequency test signal of standard amplitude (0 dBm) is automatically transmitted from the terminating office and monitored at the originating office by a transmission measuring set (TMS) as illustrated in Figure 19-4. The power of the received signal relative to the known power of the transmitted signal is a measure of the loss in the connection.

When noise is to be measured, a new connection must be established to a test terminal in the distant central office to apply a resistive

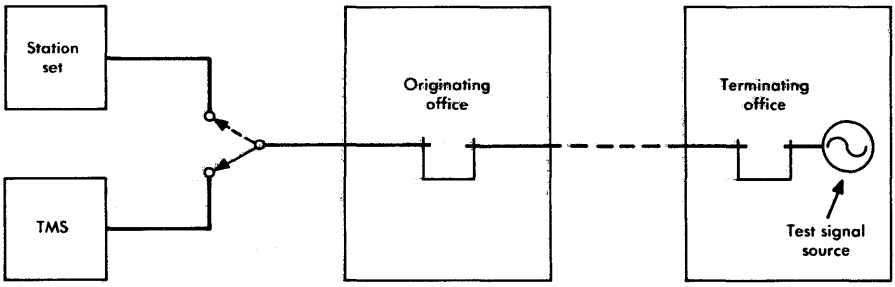

Figure 19-4. Connection appraisal loss measurement.

termination to the connection. After the connection has been established, it is monitored at the originating end by a noise measuring set (NMS) as illustrated in Figure 19-5 and the noise in dBrnc is recorded. If the noise exceeds a mileage-dependent reference value, the connection is audibly monitored and the type of noise observed is recorded. Noise types include babble, crosstalk, impulse, power hum, tones, data, random noise, etc.

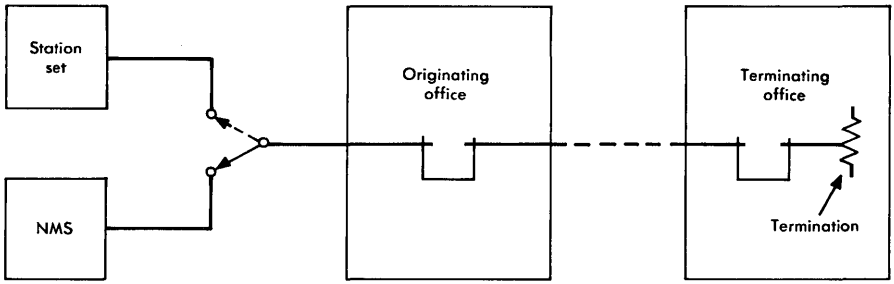

Figure 19-5. Connection appraisal noise measurement.

Test Call Samples. A complete connection appraisal survey of a central office requires 200 measurements, 50 each for loss and noise for both local and toll components. The number of connections has been selected to give reasonable statistical accuracy while permitting the completion of the entire survey in one central office during a normal working day. The results of such a survey give only an approximate evaluation of performance for a single originating entity; results are quite accurate, however, when used for comparison of entities in a large division or operating area.

The 50 loss and noise measurement connections from the central office being surveyed are made to other central offices in the local area on a random basis. If the surveyed office has access to fewer than 50 other offices, the calls are distributed equally in a random order to the remote offices. If the surveyed office has access to more than 50 remote offices, 50 are selected at random from the total. A time-shared computer program is available for the selection of the local connection appraisal sample for large metropolitan areas.

Since a much larger number of central offices can be reached over the toll portion of the network than over the local portion, the selection of the 50 loss and noise measurement connections is more compli-

cated for the toll component than for the local component. Sample connections are selected on the basis of observations of toll calling patterns that exist in the surveyed office. These patterns are derived from data assembled by the traffic department on intrastate and interstate traffic. Calls that originate and terminate in the same toll office are not included since no intertoll trunks would be required for such connections.

Independent samples of 50 calls are drawn, in accordance with the toll traffic patterns described above, for each building. (All the switching entities in one building share the same sample.) The terminating telephone numbers for the test calls are determined from test line directories made available for this purpose. Most of the test connections are established by direct distance dialing. The sample pattern and the test line directory numbers are selected annually from data already available, in a central computer, for other studies. These data, including the appropriate noise reference values, are furnished as a computer printout.

Analysis. Loss and noise data accumulated during a connection appraisal survey are usually examined immediately after the completion of a survey. If the data show a pattern indicating trouble or design deficiencies common to the originating office, a review with plant personnel may be warranted. Investigation and/or corrective action may follow.

After the initial review, data are collected at AT&T company headquarters for computer evaluation. This evaluation produces a connection appraisal index and an additional printout for further engineering or plant consideration. It summarizes data quarterly for each originating office and may be used for comparisons of local offices. The survey results are compiled to produce additional summaries by terminating points. These summary printouts are also used as guides to determine the need for further investigation and/or corrective action.

From design considerations and previous experience, distribution functions for loss and noise are available and may be used for preliminary evaluation of connection appraisal test results. Since substantial variation is inherent in the connection appraisal data, it cannot be assumed that there is an identifiable trouble for every measurement that exceeds some published reference value; however, guidelines are available to assist the analyst.

Sometimes, poor results indicated by a connection appraisal survey are more apparent than real. False indications may be due to defective or improperly adjusted equipment or test lines. The calibration of test equipment should always be considered a prerequisite to making transmission tests. In addition, test results should be interpreted with due regard for the limits of statistical accuracy of the measurement plan.

Local Measurement Data. Loss and noise data obtained in a local connection appraisal survey must be examined separately and compared with applicable reference values. Trunk losses must be maintained within specified limits in order that received volumes, noise, echoes, near singing, and contrast be held to acceptable values. Poor transmission performance may be due to inadequate maintenance or design errors. As a general guide, an investigation should be initiated if more than three of a 50-call sample show losses greater than the 8-dB upper reference or less than the 1-dB lower reference given for local connection appraisal. Also, an investigation should be considered if fewer than 65 percent of observations show losses less than 5.5 dB in a nonmetropolitan area or less than 6.5 dB in a metropolitan area. (For these purposes, a metropolitan area is defined as a local area having intertandem trunks.) These reference limits are derived from expected distributions of local trunk losses.

Noise values in local measurements also display substantial variation and in a survey involving noise measurements on 50 local connections, three or four readings may be expected to exceed the noise reference. Preliminary study of raw or processed data taken on a connection appraisal survey may often be used to determine the source of excessive noise. For example, if reference values are exceeded on connections to several locations, the originating office may be the source of trouble. If noise is high on all calls, the local central office battery supply may be noisy. If high noise appears on a specific route, the noise may originate in a particular trunk or trunk group. Generally, an investigation should be undertaken if eight or more connections show noise in excess of the reference value.

Toll Measurement Data. The analysis of excessive loss and/or noise on toll connections is somewhat more complicated than on local connections because of the more extensive use of alternate routing and the complex combination of trunks that may be used in a connection. Toll connection measurements sometimes reveal trouble or design

deficiencies in the originating office. When a review of raw or processed data indicates such difficulties, the data should be referred immediately to plant personnel for investigation and possibly to the DDD service bureau. When deficiencies beyond the originating office are apparent, they are much more difficult to isolate and must be identified by an analysis of broader scope.

Toll connection losses are controlled by via net loss design. The resulting distribution of toll losses is such that in a sample of 50 connection appraisal loss measurements, about 6 percent may be expected to be greater than the given upper reference value (9 dB for connections longer than 80 airline miles and 8 dB for connections shorter than 80 airline miles) and about 6 percent may be expected to be less than the given lower reference value (5 dB for connections longer than 80 airline miles and 3 dB for connections shorter than 80 airline miles). Wide deviations from these quantities should be investigated but connection appraisal tests are seldom useful in isolating individual trunks that may cause these wide deviations.

If an unusually high number of loss values exceed the upper reference value and few or none are less than the lower reference value, the average loss is likely to be above the nominal value. The cause may be failure to design trunks to their proper loss values or inadequate maintenance. For example, excess loss on connections through No. 4 crossbar switching machines may be due to failure to switch loss pads. Generally, investigation is warranted if 12 or more connections show loss exceeding the upper reference value.

If an unusually high number of connections show loss below the lower reference value and few or none show loss exceeding the upper reference value, the average trunk loss is low, a condition that may be due to improper design, improper adjustment of repeaters, or improper use of test pads in toll connecting trunks. Investigation should be made if more than 10 observations of loss are below the lower reference value.

Out of 50 measurements of toll connection loss, about 6 measurements may be expected to show loss outside the upper or lower reference values. If the total is 19 or more, investigation is necessary. This situation may be caused by unsatisfactory maintenance or by combinations of troubles such as high loss on one route and low loss on another. Such conditions may be observed by examination of either raw or processed loss data.

The noise measurements are judged against a variable reference value that is a function of the airline mileages between the originating and terminating toll centers. As shown in Figure 19-6, eight mileage ranges are provided, with a noise reference value assigned to each. The values are selected so that about 8 percent of the measured values for each mileage may be expected to exceed the reference value.

AIRLINE DISTANCES IN MILES BETWEEN TOLL CENTERS	NOISE REFERENCE, dBrnc
0 to 40	26
41 to 80	28
81 to 150	30
151 to 300	32
301 to 600	34
601 to 1200	36
1201 to 2400	38
2401 or more	40

Figure 19-6. Toll connection appraisal, noise reference values.

It should be stressed that these reference values are points on distribution curves and not limits. Measured values in excess of the reference values may or may not indicate trouble. If the number of observations exceeding the reference values is greater than 25 percent, investigation may be desirable. If the reference values are exceeded primarily on long connections, the noise sources may be in intertoll trunks or at the distant end. If the reference values are exceeded primarily on short connections, the short-haul toll plant may be introducing trouble. If noise is high on all connections, the trouble may be in the local central office or in the nearby toll connecting trunks.

Generally, investigation should be initiated if the noise reference values are exceeded on 12 or more connections in a sample of 50. It is also desirable to analyze combined data taken from appraisal tests of different end offices homing on the same toll office. If connections are made to the same terminating points, significant conclusions may sometimes be reached about trouble patterns at the distant points.

19-3 MEASUREMENT-DERIVED TRANSMISSION INDICES

Transmission measurement data are used in two ways. First, since the data are too numerous to be easily manipulated, they are simplified and combined into indices that may be used to evaluate plant performance and to compare the performance of administrative units. When these indices show poor or deteriorating performance, the data again become useful in identifying troubles and pointing toward corrective action.

Indices represent simplified summaries of large amounts of data which would be unwieldy and even useless if unprocessed. The development of indices usually involves statistical analysis of data, comparison of results with some well-defined reference values, and weighting of results to account for indirect effects; finally, the processed results are translated into a single number (the index) that bears a relationship to transmission and grade-of-service objectives. These indices are generally designed to reflect the following ratings:

99 - 100	Excellent
96 - 98	Fully satisfactory
90 - 95	Fair to mediocre
Below 90	Unsatisfactory.

Components of indices are often given individual index ratings. The index concept is such that if all components have the same value, the overall index will have that value. If the components differ, their relationships to the overall index depend on the applied weighting factors.

The transmission performance index (TPI) is shown in Figure 19-7 to consist ultimately of four components: the connection appraisal index, the trunk transmission index, the subscriber plant transmission index, and the station transmission index. All but one of these (the station transmission index) are at least partially implemented; measurement plans are specified and procedures are available to translate measured data into index numbers.

Since the station transmission index has not been developed and a number of other indices have not yet been fully developed, the transmission performance index has also not yet been fully developed. The connection appraisal index, trunk transmission maintenance index,

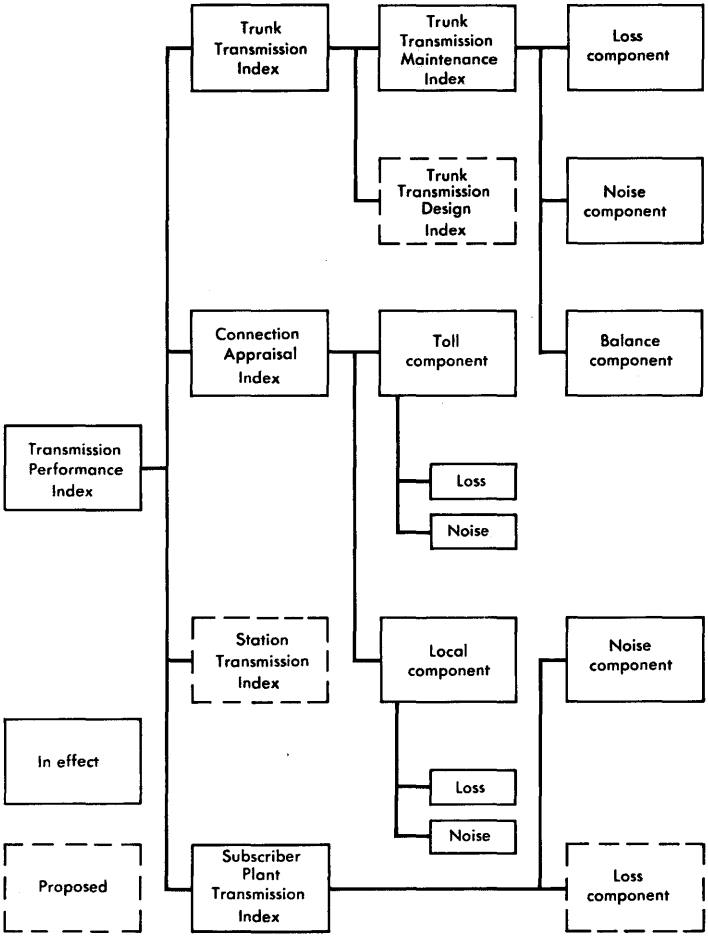

Figure 19-7. Components of the transmission performance index.

and the noise component of the subscriber plant transmission index are now used individually as measures of Bell System transmission performance. In addition to deriving the index, connection appraisal measurements are used to calculate the loss-noise grade of service. Both measures of performance are reported.

Indices provide broad general evaluations of performance, show trends of performance, and permit performance comparisons within or among administrative units. Except on rare occasions, they cannot

be used to isolate and identify specific troubles but the data from which the indices are derived are often useful for these purposes. Indices can be a powerful management tool when properly interpreted and used to assist in identifying weak spots and making judgment in assigning resources.

Transmission measurement plans and the development of useful indices are constantly evolving processes. The pace of index development depends on intangibles such as the changes in customer opinions about telephone service and the introduction of new systems and services. Simplicity of field analysis results from the use of indices; attention is focused on the extremes of parameter distributions where some of the most significant contributors to poor performance are found. The value of this approach has been demonstrated by experience. Even where transmission measurement plans are not generally in use, the determination of the distribution function for any parameter and the concentration of effort to eliminate extreme values can lead to significant performance improvement.

Derivation of Transmission Indices

The calculation of transmission indices is a process too lengthy and complex to treat here in detail. The general principles used can be reviewed however, and their application to each of the indices currently used in the Bell System can then be discussed in greater detail.

Figure 19-8 illustrates two normal density functions that might represent data derived from internal measurements. Curve A, labelled poor because it has a large standard deviation, indicates that there

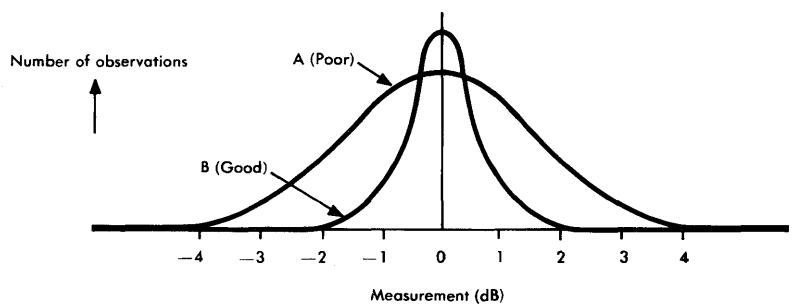

Figure 19-8. Typical transmission parameter density functions.

is a large percentage of calls that may be rated poor. Curve B is labelled good because it has a relatively small standard deviation, i.e., has fewer calls exceeding a given limit.

In the past, performance was judged by indices derived from mathematical treatment of the data to determine mean values (bias) and standard deviations (distribution grade). This approach proved unsatisfactory for field use where the assumption of normal distribution functions was not always valid and the training of field personnel to process the data and apply the results proved to be impractical.

Transmission indices are based on measurements that exceed specified values. For example, Figure 19-9 represents the density function for measured loss deviations on a group of circuits. Loss that is too high results in low volume on connections; loss that is too low results in uncomfortably high volume, excessive echo, or circuit instability. Thus, limits R_1 and R_2 are indicated as values that should not be exceeded. The percentage of measurements outside these limits is used as a basis for determining the index. Where the density function representing facility performance has a wide distribution, it is sometimes necessary to select two additional reference points, R_3 and R_4; observations outside these limits may be given a heavier weighting.

Another density function to be considered is that for noise observations as shown in Figure 19-10. In this case, there is no lower limit on observed noise values. High noise values are undesirable and so the number of measurements in excess of limit R is used as a basis for determining the noise index.

Although the measurement plans in use do not cover all components of plant or all transmission parameters, these principles can be used

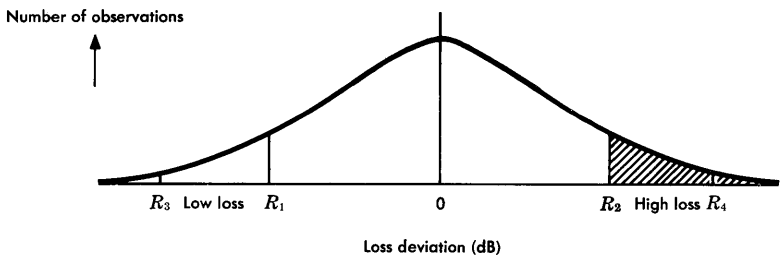

Figure 19-9. Density function for loss measurements.

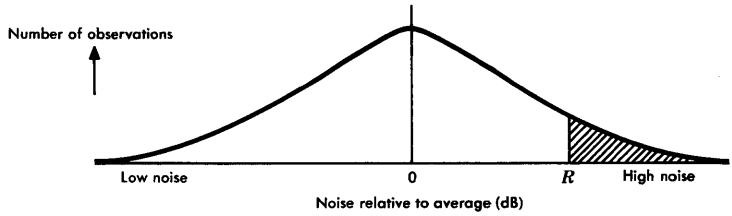

Figure 19-10. Density function for noise measurements.

to control any measurable parameter of any component of plant; i.e., the identification of facilities requiring corrective action is made possible through the use of reference values. These reference values must be derived by careful analysis of data and by careful comparison with transmission objectives.

An index can usually be expressed as a single number that describes transmission performance in a specific area or administrative unit for particular kinds of circuits with respect to a well-defined parameter or parameters. For example, a typical connection appraisal index for a given area might be 96.6. This index could result from a toll component index of 98.0 and a local component index of 95.2. Even though the overall index of 96.6 indicates that performance in this area is satisfactory, the local component is rather low and bears investigation.

The data collected for index calculation are entered on standard forms which permit straightforward tabulating, summarizing, and analyzing. A reference value for each parameter (loss in dB, noise in dBrnc, etc.) has previously been established on the basis of fundamental studies and analysis or design. Detailed processing of raw data can be carried out, if necessary, but indices are determined only from such factors as the percentage of observations made, the percentage of observations exceeding a given reference value, or the percentage of observations outside double-ended reference limits. Such percentage scores are here termed the "level of compliance."

An index table for each parameter is prepared by determining the performance of network entities (e.g., a marker group in a No. 5 crossbar machine) during a base period and rank-ordering the reported levels of compliance. Three index points are specified: 100 is the index rating given to the level of compliance exceeded by only

2-1/2 percent of the areas during the base period, 97 is the rating given to the median level of compliance, and 90 is the rating given to the level of compliance exceeded by 97-1/2 percent of the network entities. An S-shaped curve which passes through these three specified points is determined by using a mathematical fitting program. The index table, which relates any measured performance to a corresponding index rating, is based on the S curve. A portion of such a table is illustrated in Figure 19-11.

The number of measurements exceeding the reference is converted to a percentage of the total measurements taken for the area or plant component being surveyed. Suppose, for example, 9.6 percent of measurements taken exceed the reference for the index represented by Figure 19-11. The index for that component is seen to be 97.2. If there are no other components, this is the total index. Where the measurements were taken on a subcomponent, component points are found in the last column, 48.6 in this illustration, and the total index is then obtained by addition of subcomponent points. The number of

PERCENT STEP	SUBCOMPONENT INDEX	COMPONENT POINTS
0- 2.0	100.0	50.0
2.1- 4.0	99.6	49.8
4.1- 5.5	99.2	49.6
5.6- 6.5	98.8	49.4
6.6- 7.5	98.4	49.2
7.6- 8.3	98.0	49.0
8.4- 9.0	97.6	48.8
9.1- 9.7	97.2	48.6
9.8-10.5	96.8	48.4
10.6-11.2	96.4	48.2
11.3-12.0	96.0	48.0
12.1-12.6	95.6	47.8
12.7-13.2	95.2	47.6
13.3-13.8	94.8	47.4
13.9-14.4	94.4	47.2
14.5-15.0	94.0	47.0

Figure 19-11. Portion of an index calculation table.

component points allotted is a proportion of the subcomponent index depending on the weighting given to that subcomponent.

Studies of this process of index derivation and calculation have led to conclusions regarding the number of measurements needed to realize statistical confidence limits of various compliance levels. Curves of confidence limits versus number of measurements for various parameters are available to assure that there has been adequate testing where the sampling approach is used.

Connection Appraisal Index

The desired performance of trunks in built-up connections with respect to loss and noise has been determined by surveys, analysis, subjective tests, and grade-of-service evaluations. For loss, the results are most directly expressed in terms of mean values and standard deviations.

For local connections, the measured losses have a mean value of 4.1 dB and a standard deviation of 1.5 dB; thus, about 82 percent of the losses are less than 5.5 dB, about 93 percent are less than 6.5 dB, and about 2 percent exceed 8.0 dB or are less than 1.0 dB. The conversion tables used to determine the index indicate an index of 98 for these losses.

The noise contribution to the local component is determined from conversion tables on the basis of the percentage of observations exceeding the reference value, 25 dBrnc. If 4.8 percent exceed the reference value, the index is 97.

Noise and loss components are weighted equally to determine the local component of the connection appraisal index. Thus, component points for each are found by using the conversion tables. They are added together to obtain the local component index.

For toll connections, the loss measurements have a mean value of 6.5 dB and a standard deviation of 1.9 dB. For these measurements, about 12 percent of the observations show losses of less than the lower reference value or greater than the upper reference value. Conversion tables show that these percentages yield an index of 97.

For determining the toll component index, the noise references are functions of airline distance between toll centers. The established

references yield an index of 97 if exceeded by 7.5 percent of the observations. The use of airline distance provides benchmarks which, if exceeded, indicate degraded noise performance that may be due to routing deficiencies, excessive back hauling, etc.

The final determination of the toll component is made by combining the noise and loss subcomponents with equal weighting. The calculation of the index representing performance in a combination of administrative units is determined by combining the level of compliance data from all the administrative units with each entity given equal weight. The overall index is then determined from the S curve.

The overall connection appraisal index is based on a combination of the local and toll components equally weighted. Each component and the overall index have expected accuracies of at least ± 1 index point with 90 percent confidence. Uncertainties are due to sampling, test equipment and test line errors, etc., all of which tend to be random and small when data from a large area are combined.

Trunk Transmission Maintenance Index

Loss, message circuit noise, and balance are involved in the trunk transmission maintenance index (TTMI). It is based on measurements, made during a one year interval, of loss and noise on all trunks involved in the survey. Balance measurements are made on only a sample of trunks. In contrast to the connection appraisal index, which evaluates combinations of trunks used in built-up connections, the TTMI evaluates the conglomerate of individual trunks.

Some of the more important considerations of TTMI involve types of facilities, lengths of trunks, weighting factors, etc.; they are discussed in order to illustrate a process that is quite complex because of the large number of variables involved. Consideration is being given to adding other components to the TTMI.

Loss Component. Since the loss component of the TTMI is derived on the basis of the measurement of all trunks, the index is weighted by the percentage of trunks actually measured. The following summary shows the weighting of subcomponents and indicates the percentage in each category that in combination yields an index in the fully satisfactory (96 to 98) range:

Group 1 — Trunks using carrier channels or equipped with other than E-type repeaters (to be measured quarterly).

SUBCOMPONENT	WEIGHTING, PERCENT	SATISFACTORY RANGE, PERCENT
Percent deviations exceeding ±0.7 dB	45	26.6 to 32.0
Percent deviations exceeding ±1.7 dB	45	2.8 to 5.5
Percent trunk measured	10	95.6 to 98.5

Group 2 — Trunks equipped with E-type repeaters (to be measured semi-annually) and trunks using outside plant facilities and having no gain devices (to be measured annually).

SUBCOMPONENT	WEIGHTING, PERCENT	SATISFACTORY RANGE, PERCENT
Percent deviations exceeding ±0.7 dB	90	7.8 to 14.5
Percent trunks measured	10	95.6 to 98.5

When indices for trunk groups, central offices, districts, or divisions are combined, the weighting factors used are based on the number of trunks in each category or unit. All trunks carry equal weighting.

As in connection appraisal, the determination of an index derived from a mass of measured data involves summarizing the data and then obtaining the index from tables prepared for that purpose. For the TTMI, a high degree of accuracy can generally be expected (±0.5 point or less in any quarter). However, trends of change are of greater concern than the accuracy of individual indices.

Index evaluation of smaller administrative units involves fewer measurements and is more susceptible to sampling variations. In a district or division, quarterly variations of ±1.0 index point may be expected. If the data involve a small number of measurements, 500 or fewer, still greater caution must be used and more emphasis must be placed on interpreting the basic data than on the index.

One of the principal results of index studies is an evaluation of maintenance. Making measurements can in no way improve performance. If the index and the basic measurements show inadequate performance, maintenance must be improved to control losses.

Noise Component. Noise objectives are sometimes expressed as limits as in Figure 19-12; the noise component of the TTMI is based partly on these values and partly on the percentage of trunks tested. A

LIMITS, dBrnc	VF	CARRIER ONLY OR MIXED FACILITIES, MILES								
		0 to 15	16 to 50	51 to 100	101 to 200	201 to 400	401 to 1000	1001 to 1500	1501 to 2500	2501 to 4000
NONCOMPANDORED	20	28	28	29	31	33	35	36	39	41
COMPANDORED	NA	23	23	24	26	28	30	31	34	36

Figure 19-12. Trunk noise limits.

90 percent weighting is applied to the measurements exceeding the maintenance limit and a 10 percent weighting is applied to the percentage of trunks tested.

The noise component of the TTMI is most accurate (± 1 index point or better) and most reliable when applied to administrative units larger than a division. If there is concern for performance in smaller units, the basic data should be analyzed although index trends sometimes are significant.

For some time after a component index plan is implemented, the index may be strongly influenced by design problems. In these cases, noise cannot be reduced below the maintenance limits until corrective action is initiated by the engineering department. If corrective action is not taken after troubles have been identified, the indices will continue to reflect poor performance. The importance of administrative programs to control corrective procedures cannot be overemphasized. Reports should be issued regularly to monitor the rate of clearing troubles, the number of troubles referred for action to the engineering department, and the status of unresolved troubles.

Balance Component. Every toll office that has met initial balance requirements and that has been certified by the transmission engineering department is surveyed at one or two year intervals to determine the balance component of the TTMI. (Certification requirements are discussed in Chapter 10.) If an office has never been certified, balance measurements may be made for index purposes providing the office meets the following requirements:

(1) All trunks measured must have been designed for VNL operation.

(2) All primary intertoll trunks measured must be assigned to four-wire facilities since those on two-wire facilities (and using two-wire repeaters) do not provide adequate echo margins.

(3) All trunks not satisfying the first two conditions must be included in the total to be balanced and must be classified as not meeting minimum ERL and SP requirements.

(4) The network building-out (NBO) capacitance must be 0.080 microfarads or less and must have been approved by the transmission engineering department.

If an office is in the process of being balanced, results are reported on the assumption that all unmeasured trunks do not meet ERL and SP requirements.

Balance measurements are made on a sampling basis to provide data for the balance component of TTMI and to determine whether an office has maintained its certification status. The sample selection involves recording data that defines the universe of trunks to be sampled, dividing the trunks into various categories (primary intertoll, secondary intertoll, intrabuilding toll connecting, and interbuilding toll connecting), and randomly selecting the trunks to be measured.

Schedules for office balance surveys are established jointly by the plant and transmission engineering organizations and are based on a number of criteria. If an office has been balanced or surveyed and meets requirements, it should be surveyed within two years. Where an office is found to be unsatisfactory, corrective action should be taken promptly and the office should be recertified; a survey should be scheduled within two years after recertification. If an office is surveyed with inconclusive results and corrective action is taken, another survey should be made one year later. A survey should also be made within one year after major rearrangements are made or when an office has been substantially expanded.

The calculation of the balance component of the TTMI is accomplished by determining the statistical distribution of the measured data and by relating the data to tables prepared for index calculations. The balance component is made up of a number of subcomponents, all of which have equal weighting (20 percent) in determining the

overall index. The five subcomponents are (1) the percentage of ERL measurements that satisfy median requirements, (2) the percentage of SP measurements that satisfy median requirements, (3) the percentage of ERL measurements less than the minimium requirements, (4) the percentage of SP measurements less than the minimum requirements, and (5) the percentage of balance-certified offices in the administrative unit.

The midrange index objective of 97 is obtained for the first four of these subcomponents when 50 percent meet the median requirement (subcomponents 1 and 2) and when 1.5 percent are less than the minimum (subcomponents 3 and 4). The index of 97 is attained for subcomponent 5 when 97 percent of the offices in the administrative unit are certified as balanced.

When balance measurements show that the performance in an administrative unit is unsatisfactory or deteriorating, investigation of the measured data is required. Sometimes the index is low because a few offices are not certified, have lost certification, or are being poorly maintained. Office records must be analyzed carefully to be sure, for example, that all trunks requiring balance have been measured, that the measurements meet the certification requirements, and that no trunks are operating below the turn-down limit. If the review indicates that the office does not meet certification requirements, corrective action must be scheduled immediately because of the deteriorating effect on service and the time required to complete a new office balance routine.

Index Determination. The three subcomponents are combined to determine the overall TTMI according to specified procedures. If balance measurements are not required in an administrative unit, equally weighted loss and noise components are combined. If the balance component is required, the weighting applied to each component is calculated as the ratio of the total number of trunks for the component of interest to the total number of measurements made for all components.

Plant personnel make most of the measurements and record most of the data; engineering personnel provide guidance and assistance, particularly in making balance measurements. The engineering department also has major responsibility for recommending and providing appropriate test facilities and for designing transmission

facilities. The magnitude of some measurement programs is so great that automatic measurement and recording has been introduced, especially for noise and loss measurements.

Subscriber Plant Transmission Index

This index is intended to evaluate telephone loop transmission performance. The only component now being measured is the noise component for which sample measurements are made. The references used for index calculation are the existing maintenance limits; design requirements are neither available nor applicable.

The noise measurements are summarized according to noise amplitude ranges and the measurements are weighted according to the anticipated noise at the station set. The estimated percentage of loops with excess noise is derived as follows:

NOISE RANGE, dBrnc	WEIGHTING MULTIPLIER
≤ 10	0
11 to 20	0.25
21 to 30	0.75
over 30	1.00

The resulting estimate of the number of noisy loops makes up 90 percent of the index for an administrative unit. The remaining 10 percent of the index is determined from the percentage of wire centers having 15 percent or more noisy loops.

Finally, wire-center results are combined to produce indices for various administrative units; weighting factors based on the number of working lines in each wire center are used. Results are presented on the basis of a running summary of measurements made over eight consecutive quarters. The index tables are constructed so that an index of 97 is achieved in an administrative unit if 95 percent of the loops are estimated to have noise equal to 20 dBrnc or less, and if 3 percent of the wire centers have 15 percent noisy loops.

Proposed Index Components

Evaluation by indices will require the development of additional components for the full implementation of the transmission performance index. Even this index is limited to the evaluation of the switched message network. Consideration must be given to the further

development of indices for application to data transmission and other special services. In addition, it may be desirable to develop an index plan that will facilitate the evaluation of central office message circuit and impulse noise contributions to overall network noise.

There is a particular need for a special services transmission measurement and evaluation plan because special services are an ever-increasing proportion of the total plant and because of the high activity in growth and rearrangements. Such a plan may be established in association with service-order activity and a sampling of service orders may be the first step in manual implementation. As automated measurement procedures are established, all special services circuits may be included in this plan.

The proposed portions of the transmission performance index are shown dotted in Figure 19-7. They include the station transmission index, the trunk transmission design index (a component of trunk transmission index), and the loss component of the subscriber plant transmission index.

The station transmission index has not yet been given detailed consideration. Measurement difficulties, high costs, and high activity in station movement due to population mobility are all obstacles that must be overcome. The introduction of new services may well stimulate work on this index.

An index plan for the evaluation of the design component of the trunk transmission index has been implemented in some Bell System companies. When fully developed and implemented system-wide, the trunk transmission design index will be a valuable means of evaluating and identifying design problems on trunks and controlling the quality of transmission on new installations.

Construction and rearrangement activities make loops among the most active parts of the plant. Complete loops are usually not involved in these activities but portions of loops are always being built, moved, or rearranged. Loop activity and the difficulties and expense associated with access to subscriber locations make it difficult to develop a loss index for maintenance and design.

When loop surveys have been conducted in the past, irregularities were commonly encountered in 10 to 15 percent of the loops. These surveys have sometimes resulted in transmission improvement pro-

grams but the high loop activity has resulted in observed irregularities appearing soon after correction.

Some Bell System companies have initiated sample measurement programs associated with newly completed outside plant work orders. This type of program appears to be advantageous because of its degree of accountability; with the high activity on loops, sample measurement programs may stimulate significant upgrading of loop performance in a relatively short period of time.

REFERENCES

1. McAdoo, K. L. "Speech Volumes on Bell System Message Circuits — 1960 Survey," *Bell System Tech. J.*, Vol. 42 (Sept. 1963), pp. 1999-2012.
2. Hinderliter, R. G. "Transmission Characteristics of Bell System Subscriber Loop Plant," *IEEE Transactions on Communications and Electronics*, Vol. 82 (Sept. 1963), pp. 464-470.
3. Gresh, P. A. "Physical and Transmission Characteristics of Customer Loop Plant," *Bell System Tech. J.*, Vol. 48 (Dec. 1969), pp. 3337-3385.
4. Manhire, L. M. "Physical and Transmission Characteristics of Customer Loop Plant," *Bell System Tech. J.*, Vol. 57 (to be published Jan. 1978).
5. Nasell, I., C. R. Ellison, Jr., and R. Holmstrom. "The Transmission Performance of Bell System Intertoll Trunks," *Bell System Tech. J.*, Vol. 47 (Oct. 1968), pp. 1561-1613.
6. Nasell, I. "The 1962 Survey of Noise and Loss on Toll Connections," *Bell System Tech. J.*, Vol. 43 (Mar. 1964), pp. 697-718.
7. Nasell, I. "Some Transmission Characteristics of Bell System Toll Connections," *Bell System Tech. J.*, Vol. 47 (July/Aug. 1968), pp. 1001-1018.
8. Duffy, F. P. and T. W. Thatcher, Jr. "Analog Transmission Performance on the Switched Telecommunications Network," *Bell System Tech. J.*, Vol. 50 (Apr. 1971), pp. 1311-1347.
9. Balkovic, M. D., H. W. Klancer, S. W. Klare, and W. G. McGruther. "High Speed Voiceband Data Transmission Performance on the Switched Telecommunications Network," *Bell System Tech. J.*, Vol. 50 (Apr. 1971), pp. 1349-1384.
10. Fleming, H. C. and R. M. Hutchinson, Jr. "Low-Speed Data Transmission Performance on the Switched Telecommunications Network," *Bell System Tech. J.*, Vol. 50 (Apr. 1971), pp. 1385-1405.
11. Alexander, A. A., R. M. Gryb, and D. W. Nast. "Capabilities of the Telephone Network for Data Transmission," *Bell System Tech. J.*, Vol. 39 (May 1960), pp. 431-476.
12. Fennick, J. H. "Amplitude Distributions of Telephone Channel Noise and a Model for Impulse Noise," *Bell System Tech. J.*, Vol. 48 (Dec. 1969), pp. 3242-3263.

13. Ingle, J. F., J. J. Kokinda, and G. E. McLaughlin. "An Automatic Transmission Measuring System for Telephone Trunks," *Bell System Tech. J.*, Vol. 46 (Nov. 1967), pp. 1935-1975.

14. Felder, H. H., A. J. Pascarella, and H. F. Shoffstall. "Automatic Testing of Transmission and Operational Functions of Intertoll Trunks," *Bell System Tech. J.*, Vol. 35 (July 1956), pp. 927-954.

Chapter 20

Maintenance and Reliability

Facilities, circuits, and equipment must be properly installed and maintained in order to provide telecommunications services that meet grade-of-service objectives. Limits are set for allowable departures of actual parameter values from design values so that these grade-of-service objectives may be met. The limits are specified in terms useful for management control as well as day-to-day maintenance work.

In this chapter, transmission facilities are defined to include the media, the equipment used in making up transmission systems, and the channels derived from these systems. A circuit, such as a loop, trunk, or special services circuit, is composed of transmission facilities and ancillary equipment including gain, signalling, terminating units, etc. A comprehensive maintenance program has evolved in which data on the performance parameters of facilities and circuits are collected and evaluated. Testing is done immediately after installation (initial testing) and then on a routine or demand basis. In addition, facility integrity is continuously monitored (surveillance). The need to make maintenance activities more economical has led to the introduction of mechanized test, surveillance, and administrative systems.

Service reliability is improved in many transmission systems by the use of protection facilities to which service may be transferred when equipment failure occurs. When a major facility failure occurs, service outage time is minimized by using emergency restoration procedures.

20-1 MAINTENANCE PRINCIPLES

Transmission objectives for message telephone service and for some special services are derived on the basis of a balance between

cost and grade of service [1]. Thus, it seems reasonable to conclude that if facilities and circuits are designed to meet these objectives, the services they provide will be satisfactory; however, facilities and/or circuits may be installed incorrectly and are subject to impairments which cause transmission quality to vary with time. Telephone operators once detected and reported these errors and impairments but conversion to direct dialing has eliminated the need for operator assistance on most connections; therefore, variations must be detected in other ways. Although trouble on nonswitched special services circuits is promptly reported, detection of such trouble before it becomes service-affecting is desirable. Therefore, the primary function of transmission maintenance is to detect and correct substandard transmission performance. Another function is to test facilities and circuits as they are installed or rearranged to assure that initial service objectives are met.

Transmission and Signalling Measurements

Transmission quality for individual connections, circuits, or facilities is evaluated by measurement of transmission characteristics and comparison of the results with standards based on subjective appraisals. The following parameters are measured on most voice-frequency circuits and many broadband facilities. Insertion loss for voice-frequency circuits is normally measured at 400, 1000, and 2800 Hz; the 400- and 2800-Hz losses are used to determine slope. For wideband circuits and carrier facilities, loss measurements are made at frequencies standardized for each type of circuit or system. Echo return losses and singing return losses are measured on message network trunks which terminate in two-wire switching machines and on many two-wire voice-frequency special services circuits. Message circuit noise and impulse noise are measured on voice-frequency circuits; average noise and impulse noise are measured on carrier facilities.

In addition to transmitting voice and/or data signals, trunks and most special services circuits must transmit control signals consisting of alerting, address, and supervisory signals for use by switching systems or station equipment. Signalling tests include dial pulse tests where the intervals between pulses and the length of pulses are measured to ensure satisfactory switching system operation and supervision tests where the satisfactory transmission of on-hook and off-hook conditions is verified.

Transmission Parameter Variations

Differences between actual and design characteristics of a transmission facility or circuit are caused by a variety of factors. To detect such differences, performance measurements must be made at the time of and subsequent to installation.

At the time of installation, the transmission characteristics of new facilities may differ from the expected or design values because of recording, design, or installation errors, because of manufacturing or installation tolerances, or because of differences between actual and assumed environmental conditions. For example, computational errors may occur during design or circuit gains may be improperly set at the time of installation. Cable conductor diameter varies and, even within manufacturing tolerances, may produce a resistance value significantly different from the nominal value. Load coil spacing tolerances may result in measurable differences between design and actual values of circuit impedances and losses. Installed cable temperature may be considerably different from the 68° Fahrenheit used in the specification of nominal cable pair characteristics.

For these reasons, transmission characteristics are measured whenever a new facility or circuit is installed; such tests are called *initial tests*. The measured characteristics are compared with expected values; if the difference exceeds initial test limits, corrective action must be taken before releasing the facility or circuit for use. Examples of the limits for such deviations are given in Figure 20-1. Loss variations in terms of differences between calculated values (EML) and measured values (AML) represent the major use of this concept.

Transmission characteristics vary after installation for several reasons. Resistors, transistors, electron tubes, and other components tend to change under the influence of heat and time to cause gain and noise changes in transmission systems. Relay contacts deteriorate with use and can introduce both loss and noise variations. Temperature and humidity variations, most noticeable in outside plant where environmental conditions are not controllable, also affect transmission characteristics. Variations also arise from errors which occur during installation of and maintenance activities on adjacent facilities and equipment.

Routine tests to detect variations are made periodically at intervals which depend on the type of facility. Figure 20-2 gives examples of

SERVICE	CIRCUIT	FREQUENCY, Hz	INITIAL LOSS LIMIT, dB*	ROUTINE LIMITS	
				OBJECTIVE†	TURN-DOWN LIMIT‡
Message network	Direct trunks with E repeaters	1000	EML ± 0.5	7.8 to 14.5	3.7 dB
		400	AML + 3.0 − 1.0	Not required Not required	Not required Not required
		2800	AML + 4.5 dB − 1.0 dB	Not required Not required	Not required Not required
	Toll connecting trunks with T-carrier using D1, D2, or D4 channel banks	1000	EML ± 0.5	26.6 to 32.0	3.7 dB
		400	AML + 2.0 − 1.0	Not required Not required	Not required Not required
		2800	AML + 2.0 − 1.0	Not required Not required	Not required Not required
Special services	Tie lines arranged for through switching	1000	EML ± 1.0	Not required	Not required

*AML measured at 1000 Hz.

†Percentage of trunks with AML more than 0.7 dB different from EML; yields satisfactory performance according to the trunk transmission maintenance index.

‡Deviation from EML.

Figure 20-1. Examples of initial and routine loss measurement limits.

SERVICE	CIRCUIT	TYPE OF FACILITY	ROUTINE TESTING INTERVALS	
			RECOMMENDED	MAXIMUM
Message network	All trunks	Carrier and microwave radio	1 week	3 months
		VF with non-E repeaters	1 week	3 months
		VF with E-type repeaters	2 weeks	6 months
		VF without repeaters	1 month	12 months
Special services	Tie lines	Carrier and microwave radio	3 months	Not specified
	Off-premises station lines	VF with repeaters	6 months	Not specified
	PBX-CO trunks	VF without repeaters	Local option	Not specified

Figure 20-2. Examples of routine testing intervals.

the intervals recommended for such tests and those which are required by transmission maintenance index plans. Margins are provided for moderate variations in transmission facility characteristics; maintenance limits are less stringent than the limits for initial measurements.

In addition to the variations mentioned above, customer opinions of transmission quality, as evaluated by subjective appraisals, vary. That is, rather than there being discrete values, there are distributions of received talker volumes, received noise, video echo ratings, etc., that are subjectively rated good or better. The number of trunks in switched connections and the number of transmission facilities or links in private line circuits are also variable.

These variabilities in facility and connection characteristics and customer evaluations require that objectives be set by using grade-of-service techniques for combining their effects. Thus, as shown in Figure 20-1, maintenance objectives are stated in the form of allowable distributions rather than as single values.

Costs and Revenues

Control of transmission quality variations requires a balance between service and costs. The cost of detecting variations in transmission quality is significant, especially when manual rather than automatic testing techniques are used. Where automatic routine testing is not available, economically practical testing intervals are often too long to ensure good transmission performance and grade of service may deteriorate.

Trunk and special services circuit designs which have low cost, yet meet design objectives, may require frequent testing and realigning and therefore have high maintenance costs; although better designs may require higher initial investment, long-range costs may be lower. Thus, total capital investment and operating costs must be considered in all designs.

A Comprehensive Maintenance Program

Both external and internal measurements of transmission performance are necessary to ensure that high quality is maintained. External measures of overall quality, such as the telephone service attitude measurement (TELSAM) plan, are necessary to evaluate the

transmission performance of the switched message network. Internal measurements of transmission and signalling characteristics are necessary to provide more specific information for locating defective or deficient circuits before they affect grade of service. They are the only source of performance information for special services other than trouble reports.

Internal measurements are performed according to a comprehensive transmission maintenance program which evaluates end-to-end quality by means of tests of complete built-up connections between end offices. The performance of individual circuits and of transmission facilities is also checked. Initial and routine tests are made of both circuits and facilities and continuous surveillance of their transmission performance is often also made.

20-2 FACILITY MAINTENANCE

Initial and routine facility tests are performed on transmission media (including twisted cable pairs and coaxial cable units), on cable carrier transmission systems (such as N-type and L-type analog systems and T-type digital systems), and on microwave radio systems. Most carrier and radio systems also provide continuous surveillance of overall system continuity.

Initial and Routine Testing

Subscriber cable pairs are usually tested by construction forces for open, short-circuited, and grounded conductors when splicing is completed [2, 3]. Individual cable pairs are retested when used to establish loops. Initial tests of twisted pairs used for interoffice trunks and toll circuits include conductor and insulation resistance, insertion loss, and return loss for loaded cable. Initial tests for coaxial cable units consist of center conductor and insulation resistance measurements and a corona survey. Pulse echo measurements are under consideration.

Initial tests for analog carrier facilities include loss, frequency response, and noise measurements over the system frequency spectrum. In addition, the gains in the carrier terminals are checked by measurements of carrier amplitudes in N-carrier systems and pilot amplitudes in L-carrier systems. Envelope delay distortion measurements are made on L-carrier systems.

On digital carrier facilities, initial tests include cable pair loss measurements and a check for digital errors using a quasi-random signal source and an error detector. The quasi-random signal is a repetitive code word which is more likely to cause digital line errors than the signals normally transmitted. Insertion loss and noise are measured at the terminals of the voice-frequency channels derived by the carrier system terminals.

Initial tests for microwave radio systems include measurements of radio channel gain at 20 MHz, frequency response, envelope delay, and noise loading to determine the amount of thermal and cross-modulation noise in the system.

Routine measurements of cable pairs are not ordinarily performed because the circuits which are routed over these facilities are routinely tested and cable pair troubles would be revealed by these tests. However, message network loops are routinely tested by automatic line insulation test equipment in central offices. This equipment automatically checks the loops for crosses, grounds, and foreign potentials which may seriously affect transmission characteristics, especially loss and noise. Routine measurements are made of pilot signal amplitudes on analog carrier systems and of pulse distortions and error performance on digital carrier systems.

Surveillance

Although routine measurements may detect degraded transmission facility performance before service is seriously affected, continuous surveillance of overall facility integrity is used to ensure that major defects are promptly recognized. Analog carrier system pilot amplitudes, digital carrier system error rate, and radio system carrier amplitude and/or noise power are continuously monitored for this purpose.

Cable gas pressure and/or gas flow are monitored as a means of determining cable integrity and to detect sheath breaks. Dry air is pumped into most cables to minimize the flow of water through sheath breaks since water can electrically short-circuit or ground cable pairs and thereby seriously impair their transmission performance. To readily determine when and where cable failures occur, the computer-controlled Cable Pressure Monitoring System (CPMS) continuously analyzes the status of transducers which measure the air pressure in various cable sections.

Analysis and sectionalization of carrier system troubles are difficult because channels within a cross-section may not all terminate at the same two locations. Since circuits may be dropped or added at many locations along a carrier facility route, a major failure may appear to be several failures involving relatively few circuits at several locations along the route. This requires simultaneous sectionalization work at each of these locations and may lead to duplication of effort to restore the facility. Analysis of such failures requires reference to records which are expensive to keep current and often cumbersome to use. Several new mechanized systems provide real-time carrier facility performance status at a central location; some of these systems also provide mechanized records and computer analysis of carrier system failures.

One of these support systems is the Carrier Transmission Maintenance System (CTMS). It is installed at a central point in large offices and is capable of making measurements, automatically or under manual direction, of transmission parameters at a number of broadband carrier system access points. Measurements can be made from distant offices by a DATA-PHONE call from a teletypewriter station. The system is controlled by a minicomputer to scan sequentially a series of predetermined alarm and measurement points associated with broadband carrier systems. Typical transmission measurements include pilot and carrier amplitudes, noise at selected frequencies, VF channel measurements of signal or noise amplitudes, and scanning measurements in search of excessive signal amplitudes ("hot tone scan").

Another centralized maintenance system is one designed for the Surveillance and Control of Transmission Systems (SCOTS) [4]. This system, intended primarily for long-haul system maintenance, uses E-type telemetry to collect status and alarm signals and to control certain functions at a large number of unmanned remote locations [5]. A polling sequence is incorporated in the system so that each remote location can be examined in turn for changes in status. The system also provides a mechanized means to schedule and coordinate routine tests; it is intended for use with facility management programs being planned.

The Transmission Alarm Surveillance and Control (TASC) System, used for general purposes in operating telephone companies, is designed to monitor electromechanical switching system, transmission

system, building, power, and miscellaneous alarms to support centralized operations and allow unstaffed office operation. This system also uses E-type telemetry.

The transmission facilities for metropolitan networks are being increasingly provided by T1 carrier systems. As these facility networks have grown, a need to provide a supporting surveillance and control arrangement has arisen. This need is now fulfilled by the T-Carrier Administration System (TCAS) [6]. The TCAS is an automated alarm reporting, analyzing, and trouble sectionalization system controlled by a minicomputer. Data and control information is transmitted from remote equipment locations to a T-carrier restoration control center (TRCC) by the E-type status reporting and control system. The major functions of TCAS may be implemented sequentially so that cost and implementation effort may be spread over a period of several years while realizing short-range and long-range benefits. In the initial phase of implementation, local displays of alarm status may be provided for every operating system that terminates in the local office. In addition, the status of all available maintenance lines (fully-powered spare T-carrier repeatered lines) is displayed. In subsequent phases of implementation, this information can be collected at remote locations and transmitted to the TRCC. Finally, maximum effectiveness can be realized by the installation of the automatic trouble sectionalization feature which is provided by a computerized system having a capacity of several thousand T-carrier systems. To be most efficient, the TRCC must include a majority of terminal and intermediate offices in the metropolitan network it serves.

Demand Schedule Maintenance

From the earliest application of long-haul microwave radio systems, routine maintenance procedures have been specified for each bay of radio equipment. This routine maintenance was designed to ensure satisfactory transmission performance of these systems and to clear incipient troubles before serious impairment could result. This approach to maintenance of radio systems is now being replaced by a method called *demand schedule maintenance.* The proposal for changing from the initial approach resulted from considerations of personnel training, the difficulty of access to some remote stations, and the need to reduce maintenance costs.

With the changeover to demand schedule maintenance, routine transmission measurements of radio switching sections are made at prescribed intervals. Parameters measured include envelope delay distortion, baseband response, baseband single-frequency interferences, and thermal noise. Equipment maintenance is performed only if the need is indicated by these measurements. Remote stations must be visited about once each month for routine battery and tower lighting system checks. At these times, routine in-service observations of the operating status of various powers, currents, and voltages are made. This approach to radio system maintenance has resulted in improvements in system reliability and performance. It has also reduced costs by eliminating premature replacement of electron tubes and by making more efficient use of maintenance manpower. Protection channel availability has been increased since the channels are used less for maintenance activities. Before this procedure was introduced, carefully controlled field trials were conducted and the resulting data were thoroughly analyzed to ascertain that the reduction of routine maintenance activities would not introduce an inordinate amount of degradation in working transmission systems.

20-3 CIRCUIT MAINTENANCE

Presently, a large amount of manual transmission maintenance is performed at testboards equipped to connect test equipment to individual loops, trunks, or special services circuits via test jacks associated with each circuit. More modern, mechanized maintenance arrangements have been introduced to reduce manual effort; these include dial-up test lines, automatic testing, and centralized mechanized testing and administration.

Loops

Although transmission characteristics of message network loops are seldom measured, talking tests and tests for short circuits, crosses, and grounds are performed whenever a loop is installed or when trouble is reported. If a loop is properly designed and passes these tests, it usually meets transmission objectives.

The local test desk, located in a repair service bureau, is equipped with test trunks for access to the loops of one or more central offices. Test cords or keys in each test desk position are used to connect test equipment to a test trunk so that, once a connection to a loop is established, crosses, grounds, or short circuits can be detected. Tests

for insertion loss at 1000 Hz are also possible from most test desks and wheatstone bridges are sometimes provided for locating cable faults.

Most local central offices are equipped with Automatic Line Insulation Test (ALIT) equipment to test sequentially each loop terminated in the central office switching equipment for short circuits, grounds, and foreign potentials in order to detect faults before they affect service [2]. The tests are normally performed early every day during periods of low traffic; they are especially important during periods of wet weather because some cable faults are difficult to detect when insulation is dry. Loops which fail tests are listed by a teletypewriter so that appropriate action may be taken.

The automated repair service bureau (ARSB) improves service by reducing the time required by manual methods to detect, locate, and repair trouble thus reducing the cost of testing and repair operations. The bureau includes a Loop Maintenance Operating System coupled with a testing system such as the Line Status Verifier. The Loop Maintenance Operating System provides multiple access to centralized records of service, work lists, automatic test results, and management reports which are stored and administered by a computer. The Line Status Verifier automatically detects excessive foreign EMF, short circuits, grounds, and open circuits on loops.

Network Trunks

Trunk transmission maintenance is intended to keep trunks working within objective parameters. When a failure is detected by facility surveillance, routine testing, or trouble reports, affected trunks are removed from service and maintenance personnel are notified. The trouble is then sectionalized to the near-end office, far-end office, or intermediate facility and the appropriate repair force is notified. Once the trouble is repaired, the trunks are retested to assure proper performance and are then restored to service. Similar tests are performed prior to placing trunks in service.

Message network trunk maintenance has evolved from manual to mechanized methods as the network has been converted to dial operation. Manual trunk maintenance methods were initially geared to clearing trouble reported by customers and operators; however, as conversion to direct dialing progressed, detection of defective trunks became necessary. Initially, the necessary tests were performed

manually. The methods are changing to mechanized testing, switched (dialed) access, and continuous monitoring of transmission performance. These methods allow maintenance effort to be devoted to clearing troubles rather than to performing repetitive tests to detect defective trunks.

Manual Testing. Outgoing trunk (OGT) test bays, toll testboards (such as the 17B testboard), and test positions (such as the STTP used with No. 1 ESS offices), have provided manual test access to message network trunks for many years. The OGT test jacks in local electromechanical switching offices are connected to the trunk circuits associated with the outgoing trunks so that transmission measuring sets and other equipment used for testing trunks may be connected to any outgoing trunk. In older toll offices, a toll testboard provides access to facilities for incoming and outgoing trunks as well as to the switchboard or switching equipment. Similar jacks at a separate voice-frequency patch bay permit patching trunks to alternative facilities during facility failures or for other reasons. Modern toll offices, such as No. 4 ESS and No. 4 crossbar, use switched access test positions.

Before dial conversion of the local and toll portions of the message network, transmission testing required two persons, one at each end of a trunk. Although some tests still require two persons, most tests are now performed either automatically or by one person. When two people are required for a test, one transmits a signal and the other measures received amplitude, envelope delay distortion, or other characteristics. This method of testing is expensive, slow, and requires clerical effort to analyze the trouble.

One-person testing became possible as dial conversion progressed and dial central offices were equipped with dial-up test lines which apply the proper test signal or other test condition at one end of a trunk. Their use reduces the number of people required to perform tests and the tests are performed more quickly because they are fully controlled by one person. Since the test results must be analyzed manually, analysis time is not reduced. Tests normally performed using dial-up test lines include measurement of loss, noise, and echo return loss and verification of proper supervisory signalling.

Loss measurements are made on local trunks by dialing a 7-digit number from the OGT test bay to the switching machine at the far end of the trunk for access to a test line designed to provide a 1-mW

signal at 1 kHz. When the test call is established, a transmission measuring set (TMS) may be connected to the trunk under test by using a patch cord between the TMS and the OGT test jack. The signal amplitude in dBm indicated on the TMS may be used to determine the insertion loss of the trunk since the oscillator is calibrated to deliver 0 dBm0. Toll trunk loss is measured by dialing a 3-digit code to reach such a test line in a toll office.

Return loss measurements, which are made during balance tests, and noise tests require that the far end of a trunk be terminated in the nominal office impedance. On local trunks, this is done by dialing another 7-digit number from the OGT test bay to the distant office for access to a balance test line which connects the proper termination (called the balance termination) to the trunk. Balance test lines in toll offices are similarly accessed by dialing a 3-digit code. A return loss measuring set or noise measuring set is used at the opposite end of the trunk. Some test lines now provide a 1-mW, 1-kHz signal for about 5.5 seconds and then connect a balance termination which may be used to measure loss, echo return loss, and noise.

Trunk supervision features are tested by dial-up test lines which send alternating on-hook and off-hook supervisory signals. A locally assigned 7-digit number is used to reach these test lines in local offices and a 3-digit code is used in toll offices.

As previously mentioned, manual testing has a number of disadvantages. High costs tend to extend routine testing intervals so that recognition of defective trunks is delayed; thus, service is degraded for longer periods than if routine tests are made often. Furthermore, measurement data lags actual performance changes thus making analysis inconclusive. Even with timely data, manual analysis is expensive. Manual routine tests are repetitive and some sectionalization tests require the coordinated efforts of several persons; these factors lead to even higher costs. Thus, most trunk testing operations should be considered for mechanization.

Mechanized Testing. Among the most important reasons for frequent, mechanized testing of network trunks is the identification and repair of so-called *killer trunks.* A killer trunk is one that is incapable of completing a connection or over which there is no transmission. When such a trunk exists, it is seized frequently and then released after only a short holding time. Having been frustrated by the failure on the first attempt, the dialer is likely to disconnect and then immedi-

ately make further attempts during which the same trunk may be seized several times. Such a condition results in undesirable network traffic performance and in undesirable customer reaction to poor service. Mechanized trunk testing makes possible the early identification of a killer trunk and makes it possible to remove it from service until the trouble can be repaired. Without mechanized testing, the existence of such a trunk can only be recognized by multiple customer complaints or traffic observations of many calls with very short holding times. In either case, manual methods of identifying the trunk are time-consuming and expensive.

Test systems which sequentially select trunks and perform transmission and signalling tests automatically have gradually been introduced into the message network. However, these systems require manual maintenance of records on punched cards or paper tape and may be considered as semi-automatic. Transmission maintenance automation has been extended to mechanized administration systems having centralized control and analysis features which may be described as fully automatic.

Semi-Automatic Testing. The trunk test systems which sequentially connect to trunks and perform signalling tests have been augmented to perform transmission tests by using the test oscillator and transmission measuring capability of the director of an Automatic Transmission Measuring System (ATMS) or similar equipment. These systems require input information on punched cards or paper tape such as that used for teletypewriter service. The information identifies the trunks to be tested and the expected measured loss and noise objectives for each trunk. It is prepared manually as trunks are added or rearranged; although tests are made automatically, significant manual effort is required to update the input information. Results of these tests are printed by teletypewriter machines which also identify circuits which have deviations beyond allowable limits; thus, the output information is in a form which requires manual effort to assemble data for reports, records, and analyses.

These test systems use the dial-up test lines previously mentioned. An additional type of test line sequentially measures the amplitude of the signal received from the ATMS director, transmits a 1-mW, 1-kHz signal, transmits a 1-kHz signal having an amplitude equal to that measured in the first step, connects a balance termination, and transmits a reorder signal if the C-message weighted noise exceeds a prescribed value.

Another type of test line and an associated ATMS responder perform the same two-way tests according to commands transmitted from the director by multifrequency signals. The results are transmitted to the director by means of a frequency shift keyed, pulse duration modulated signal.

Mechanized Testing Systems. Fully mechanized systems which provide centralized control and administration have been developed. The number of routine tests on message network trunks increases about 15 percent each year as a result of growth and the increasing use of carrier and VF repeatered facilities. Trunks routed over such facilities require more frequent tests than nonrepeatered trunks. This increase in testing load and the increasing cost of labor are leading to a conversion from manual to mechanized testing which is analogous to the conversion from manual to dial operation of the message network.

The Centralized Automatic Reporting on Trunks (CAROT) System is a major example of a mechanized trunk maintenance system [7]. It performs end-to-end routine transmission and operational tests on message network trunks from a central location. The system consists of a centralized controller, remote office test lines (ROTL) and ATMS responders associated with test lines. The controller simultaneously accesses up to 14 ROTLs via switched message network connections; a connection is established from each ROTL through the trunk under test to a test line associated with an ATMS responder at the opposite end of the trunk. Insertion loss and noise measurements are made and the results are transmitted back to the controller for analysis and reports. With the presently recommended intervals for routine trunk tests, each controller can test about 100,000 trunks. Other features available in the CAROT System include administrative support for circuit order operations and the performance of transmission tests at 404, 1004, and 2804 Hz.

The CAROT controller provides central storage and maintenance of trunk data such as trunk identification codes, EMLs, and AMLs. It also schedules trunk tests at test intervals specified in the data base. In addition to reporting trouble indications to the administrative control offices by teletypewriter, the controller compiles information for management use; this includes the data required for the trunk transmission maintenance index.

Selection Factors. Mechanized systems can reduce costs and solve many of the problems associated with manual systems. In order to choose between mechanized and manual maintenance systems, the costs for each must be determined. Labor costs, typically the largest component of manual system costs, are the most difficult to measure; therefore, time and motion studies may be necessary. In addition, it is necessary to determine the ability of a maintenance system to improve circuit availability so that fewer circuits are needed.

In addition to cost, selection of a maintenance system requires consideration of several other factors. There are significant differences between the various types of electromechanical and processor-controlled switching machines which may complicate the design of a multioffice system. Different types of test access are achievable with different facilities. The economics of office size, facility cross-section, and geographic dispersion of both offices and facilities all have direct bearing on the applicability of centralized approaches to trunk transmission maintenance because large numbers of trunks are required to support the costs of mechanization. Consideration must also be given to the fact that the environment for transmission maintenance is constantly changing. New transmission and switching systems and additional features for existing systems are continually being developed.

Special Services

In many respects, the maintenance techniques employed for special services circuits are different from those employed for switched message network circuits. Special services circuits may be switched or nonswitched and circuit lengths may vary from local intraoffice circuits to intercontinental long-haul circuits. Signal formats vary from very infrequent changes in direct current flow, such as that found on some alarm circuits, through the more complex signals of voice and data channels to video signals. Special station equipment, such as data sets, PBXs, key telephone sets, and loudspeakers may be required. Some data circuits require special transmission conditioning. The maintenance of such a wide variety of services also complicates personnel training.

Other factors which complicate the task of furnishing special services may be found by examining the basic differences in the makeup of switched message network and special services circuits.

In the evolution of the message network, performance requirements have been defined in relation to a hierarchy of switching offices and transmission circuits. The only components of the network an individual customer is permanently dependent upon are the telephone set and the loop. Failure of any other network element is not likely to affect an individual customer because of alternate routing and the multiple paths of the message network. On the other hand, the structure of most special services does not allow for exploiting these characteristics of the message network. For example, a foreign exchange (FX) line may traverse loop, toll connecting, and intertoll facilities before being connected to the switched network at an end office. Special gain and signalling range extension equipment may be required to provide adequate transmission and signalling performance. The service may have also traversed a number of different administrative areas and even different operating telephone companies such that ambiguities may arise in accountability and responsibility for end-to-end service.

In order to illustrate how the maintenance task is presently handled, it is convenient to divide the special services environment into two categories, local and toll plant. The local plant environment is dominated by the metallic facilities of the loop plant and by metallic and digital carrier facilities of the interoffice plant. Special services circuits utilize a variety of arrangements of VF gain devices, signalling range extenders, and converters not used in the message network. Maintenance responsibilities for a local special services circuit are typically assigned to a repair service bureau (RSB) at one end of the circuit. Since most RSBs have special services responsibilities, it is difficult to centralize these responsibilities. In the toll plant environment, the circuits are likely to be made up of standard analog carrier and/or microwave radio facilities routed through the serving test center (STC). This permits a fairly unified approach. Increased mechanization of special services maintenance is being introduced by a concept that combines modern maintenance and administrative systems in a Special Service Center (SSC).

Manual Testing. In the local plant environment, test access to special services circuits, such as FX lines, is often limited to an RSB local test desk at the switched end of the circuit. Access to all other locations on FX lines and on all locations of other special services is usually limited to main distributing frame connecting devices, called

shoes, which must be manually applied. In some cases, access may be gained at VF patch bay jacks, carrier facility jacks, repeater equipment jacks, or special services testboards. The special services testing capability in the RSB is usually limited to dc tests although a few appliques for transmission testing and four-wire capability have been developed in local areas.

Administration and recordkeeping for local special services maintenance is normally performed in conjunction with and in the same format as for the message network. However, special services testing is usually a secondary consideration since the primary responsibility is for message network lines; the customer trouble report and analysis plan (CTRAP) does not adequately reflect the problems of special services.

The toll environment provides a relatively well-organized and structured arrangement for special services maintenance operations. Up to several thousand special services circuits may be routed through a typical STC which has a private line testboard with jack access and appropriate transmission and signalling test equipment. In some locations, a Switched Maintenance Access System (SMAS) provides switched access and requires less space than jack boards. One version of this system provides local switched access to carrier facilities carrying both message network trunks and special services circuits in large offices.

Data test centers provide manual testing for DATA-PHONE data sets from centralized locations and are not directly associated with RSBs and STCs.

Mechanized Testing. The introduction of mechanized testing systems is gradually eliminating the distinction between RSB and STC functions. These systems include the Switched Access and Remote Test System (SARTS), the Circuit Maintenance System (CMS-3A), and the Automatic Data Test System (ADTS) [8, 9, 10, 11].

The SARTS provides one-person remote testing with switched access and consists of far-end (point of access) equipment and near-end (test position) equipment. The far-end equipment is unmanned and collocated with the terminals of the circuits being tested. This equipment includes a SMAS which can access up to eight circuits at one time and extend them to local jacks for in-office testing or to a remote

test system for remote testing. The near-end equipment includes a test position which consists of a cathode-ray-tube-equipped keyboard display terminal and a communications console (a DATASPEED® 40 terminal). The near-end equipment also includes computer-controlled logic required to operate SARTS. The test position and computer combination provides the means for accessing and testing circuits in far-end offices and for displaying test results; thus, sectionalizing tests can be performed from one position.

The CMS is a computerized system which provides mechanized records and administrative support within a geographic region; it includes a keyboard display terminal. This system can be functionally integrated with SARTS and is expected to have functional interfaces with complementary maintenance and test systems for facility, station equipment, and loop maintenance.

Mechanization of most testing operations required to install and maintain standard data sets and terminals is provided by the ADTS, a computer-controlled system located in central offices. This system mechanizes many of the functions performed by data test centers including routine, preplanned, and programmable tasks but data test centers are required in order to perform some tests. The ADTS is designed to interface with SARTS, CMS-3A, SMAS, and private line testboards. Use of these mechanized systems leads to better service and lower costs by consolidating testing expertise and by reducing the number of personnel, multiperson tests, and erroneous sectionalization tests. Out-of-service time is also reduced, more accurate and lower cost record keeping is provided, and circuit misroutes to provide test access are eliminated.

The introduction of SARTS and CMS-3A led to the introduction of a new and more effective special services control, administrative, and operations concept. This concept involves the assignment of responsibility for both local and toll services to an SSC [12]. From its central location, an SSC controls installation, remote test and maintenance, and record and results administration. It also serves as the primary point of customer contact on repairs. Where appropriate, the responsibility and authority to control all of the services making up a particular special service network may be assigned to one SSC; working through CMS, the control center can coordinate the activities of other centers involved in that network.

20-4 RELIABILITY

Maintenance facilities and methods are provided in a telecommunications network to assure continuing reliability of service. System designs use many devices and components which must satisfy performance and reliability criteria and, in addition, include operating margins against overload and environmental changes. Some systems also include equipment and facilities that are operated as maintenance and protection facilities so that service can be transferred in the event of failure or during maintenance activities on the regular equipment. The transfer may be effected automatically by appropriate switching arrangements or manually by patching.

To protect service against failure of carrier and microwave radio systems, emergency restoration equipment and methods are provided and emergency repair equipment is kept in storage ready for use. Some systems on major routes are "hardened" to withstand natural or man-made catastrophe. Circuit routings are dispersed so that a failure in one route does not necessarily disrupt all service to a community or to some important point in the communications network.

Transmission systems are composed of three major categories of components, the transmission medium, line equipment, and terminal equipment. The first two are often considered together and referred to simply as the line. Terminal equipment includes gain adjusting, modulating, multiplexing, signalling, and interconnection components as well as common equipment such as carrier and pilot supplies, synchronizing signal generators, and power components. Service protection on such systems is thus considered in terms of either line, terminal, or common equipment protection.

Protection Facilities

Except in rare cases, individual loops, trunks, and special services circuits are not provided with protection facilities; the cost would be prohibitive. However, most transmission systems are protected. The provision of such facilities is based on the assumption that the larger the system capacity, the more need there is for protection since a greater number of circuits may be affected by a failure.

Modes of Operation. Microwave radio and coaxial carrier systems provide the majority of long-haul transmission channels for the telecommunications network. For short-haul channels, microwave radio

systems, wire-pair cables, and cable carrier systems are used extensively; some analog and digital coaxial systems are used in heavy cross-sections of metropolitan networks.

The long-haul microwave radio systems use automatic protection switching arrangements in which several radio channels are protected by one or more standby channels [13]. Automatic switching to protection channels is required to maintain service in case of equipment failure and, most important, to maintain service during microwave radio fading intervals. The protection channels are also used to permit working channels to be taken out of service for maintenance. Rules governing the application of these protection arrangements have been issued by the Federal Communications Commission (FCC) to make efficient use of the radio spectrum.

Where a route consists of three or more (up to eleven) 4-GHz channels or three or more (up to seven) 6-GHz channels, one protection channel in the same frequency band is allowed. Where a combination of 4-GHz and 6-GHz systems is used, two protection channels, located in either band, are permitted. In this arrangement, up to 18 working radio channels may be involved. Where a route has fewer than three 4-GHz or 6-GHz channels, the FCC does not allow a frequency diversity protection channel except in unusual circumstances. Where frequency diversity protection cannot be used, reliability is provided by a combination of space diversity switching and the operation of repeater protection equipment called hot standby switching. In the space diversity arrangement, two receiving antennae are installed at different heights on each tower to create different transmission paths between repeaters; a separate receiver is connected to each receiving antenna. When fading occurs, the stronger signal at the receiver outputs is switched to duplicate transmitters. A simple switch, located between the outputs of the transmitters and the transmitting antenna, is used to select the signal for transmission. The duplicate receivers and transmitters in combination with the switching arrangement provide protection against equipment failure.

The long-haul analog coaxial transmission systems are also equipped with protection facilities and automatic switching. The switching arrangements have been expanded and have become more complex as new transmission systems have been developed. Initially, the L1 coaxial system operated with one protection line for each working coaxial. In the L5 coaxial system, one protection line is used to protect up to ten working lines in each direction of transmission.

The short analog microwave and analog and digital coaxial systems are somewhat similarly arranged and optional arrangements are provided for manual switching (patching) of L4 coaxial systems applied to extremely short routes. In N-type short-haul systems, protection switching is generally not used. However, T1-type systems are usually provided with one patchable maintenance system for up to 24 working systems. A one-for-one switchable span line arrangement is available for T1 systems assigned to digital data system use. It can also be used for other T1 applications. In addition, automatic span line switching of T1 systems can be provided for up to 22 working systems by the use of outside supplier switching equipment. These arrangements are generally used to provide reliability of T1 outstate (T1/OS) systems. The T2-type systems are equipped with span line switching which may automatically protect up to 23 working systems.

Analog multiplex equipment that operates at mastergroup levels of the multiplex hierarchy is generally provided with automatic protection switching facilities and with patching arrangements that permit flexible use of spare equipment for service protection and broadband restoration. Digital multiplex terminals that combine signals of the DS1 (1.544 Mb/s) or higher rates are also provided with protection switching arrangements.

Transmission Effects. The provision of protection facilities results in exceptionally high reliability for the systems involved, especially where automatic switching arrangements are used. However, in some cases, there are slight transmission penalties.

When systems protected by automatic switching arrangements fail, the failure and the switch back to normal after repairs have been made generally cause momentary opens or momentary changes in the phase or net loss of the circuits involved. For example, if the insertion gains of the working and protection channels are not identical, there is a change in net loss or gain of the circuits that are switched. Such changes may or may not be compensated by regulator action. Restoral of the working channel to service usually causes the inverse of the initial gain change. These effects, called hits, are minimal except for possible increases in errors in data transmission. Similar effects are observed when circuits are patched. The design of hitless switching arrangements, while theoretically feasible, has proven to be impractical and uneconomical.

Common Equipment. The operation of transmission systems is dependent on common use equipment that is shared by a number of transmission panels, bays, complete systems, or even by an entire office. Among these are power sources, carrier supplies, pilot supplies, and synchronizing equipment.

Commercial sources of ac power are used in all offices as the primary power supply for the telecommunications equipment. The circuits are arranged so that the ac supply (converted to dc) is used to maintain the office battery at full charge while simultaneously operating the equipment. In the event of ac failure, the battery alone carries the load until ac service is restored or until the office emergency ac generators are switched into service. In addition to these emergency arrangements, power distribution and fusing are designed so that failure in one part of an office is limited to specific circuits or systems while other parts of the office continue to function normally.

Nearly all carrier supply, pilot generating and synchronizing signal equipment is duplicated and the signal supply circuits are arranged so that the protection equipment is automatically switched into service when failure occurs. The local sources of synchronizing signals are controlled by a master synchronizing signal transmitted from a central point in the United States. If the master signal fails or if the distribution circuits are disrupted, the local sources continue to operate in a free-running mode. Telecommunications services are maintained but may deteriorate if synchronization is not quickly restored.

Emergency Restoration

Major failures on systems that serve large cross-sections of circuits, such as those caused by the cutting of a coaxial cable or the destruction of a microwave radio tower, can produce massive service disruptions not only on the directly affected route but on many interconnected and interrelated routes, primarily because of alternate traffic routing. In order to restore as much service as possible in the shortest time, procedures have been established to use the protection facilities of operating interconnecting systems for restoration purposes.

Most restoration activities involve the toll portion of the network. However, where individual operating companies have appropriate facilities and needs, they are included. The network is divided into administrative areas for restoration purposes. Activities in each such

area are controlled by a restoration control center which receives all failure reports and directs all restoration procedures.

Restoration procedures are carefully defined and prescribed in a series of standard books (dictionaries) maintained at every office where such procedures can be effected. The procedures are changed when facilities are added to or removed from service so that restoration plans properly reflect the field situation. Alternate restoration plans are also documented where possible so that if a plan cannot be implemented, alternate plans are available.

Practice exercises in restoration are carried out regularly. The restoration plan to be practiced is actually set up from one end to the other except that the final transfer of service at the receiving end is not made. However, circuit continuity is checked and the amount of time taken to set up the restoration route is recorded.

All documentation and implementation procedures for emergency broadband restoration are carried out manually. However, the automation of the documentation of restoration plans is under study and may well become a reality in the future. A facility management center is also being considered which may become the center of such documentation activities.

Restoration procedures are made more complex by two sets of circumstances which are outgrowths of the natural evolution of technology. The first of these is the problem of providing for emergency restoration of a new transmission system that represents a significant increase in channel capacity over previous systems. For example, it is conceivable that one, two, or three failed L4 coaxial line signals could be restored over the protection facilities of an L5 coaxial system. However, it is inconceivable that a failed L5 line signal could be restored over the protection facilities of a single L4 system. The L5 spectrum would have to be broken up and restored in segments, if at all, over a number of other facilities.

The second dilemma must be faced when a new type of system with a transmission mode that is incompatible with that of existing systems is placed in service. This problem is of concern during the period when new digital transmission systems are being introduced. The restoration of T-type systems can only be accomplished over similar T-type systems or service must be restored from a point where the signals are in analog form.

Restoration procedures are being mechanized by the use of the Facilities Management Administration System (FAMAS). This system is capable of utilizing data accumulated by SCOTS regarding channel status and facility availability in order to specify facility route selection for restoration. The many constraints present in the network are taken into account by the FAMAS program.

In addition to the application of FAMAS, *network management* procedures are being used increasingly to reroute traffic when there are major facility failures. Thus, the maintenance of service is becoming more closely controlled by and related to traffic network operations than by facility network operations.

Procedures. Emergency restoration procedures are provided for both complete and partial systems. A failed microwave radio system may be restored on the basis of individual mastergroups or as a complete system either at intermediate frequencies (IF) or at baseband. When the system is restored entirely at IF by patching or switching around the failure point over sidelegs or crossing routes, the procedure is called IF reentry.

To facilitate the implementation of restoration procedures, a restoration patch bay is used as an interconnecting point. All mastergroup or line signal spectra that may have to be restored and all spare terminal equipment and line facilities that can be used for restoration are connected to jacks on the patch bay. Special trunks are used to interconnect the patch bay with the appropriate line or terminal equipment. At the patch bay, common transmission level points are provided so that interconnection can be accomplished simply and expeditiously by the use of patch cords.

Restoration usually results in shorter service outage time than repair procedures but it is always desirable to release the restoration facilities to the protection function as soon as possible. To accomplish this and to effect restoration as quickly as possible where protection facilities are not available for restoration, a wide variety of emergency repair facilities are maintained at many locations. Among these facilities are portable towers and antennas for microwave radio systems and simplified portable microwave repeaters. Similarly, lengths of cable, repeaters, and apparatus cases are maintained for temporary emergency repairs of coaxial and cable carrier systems.

Many other types of spare equipment are maintained so that service can be restored quickly in the event of major failure or so that exist-

ing facilities can be augmented to satisfy a temporary need or an emergency situation. Included are small trailer-mounted switching machines, power plants, emergency generators, and coin telephones and booths. Supply depots are maintained with stocks of equipment and cable so that repairs can be made promptly after the massive damage that sometimes results from wind, rain, sleet, or fire.

Transmission Effects. The procedures involved in restoration may, in some cases, cause slight transmission performance degradation. After emergency restoration, damage is repaired and the facilities are restored to their normal working condition. This action is usually accompanied by a hit in the form of a momentary open or a change in circuit net gain or phase. Also, emergency repairs involve the temporary use of facilities that may not meet normal objectives. While the degradation due to these facilities is usually of a minor nature, there may be some deterioration of signal-to-noise performance or in facility equalization. In some cases, the restoration plan routing may add significant length, possibly up to several thousand miles, to the restored circuits. When this occurs, there is a signal-to-noise penalty that cannot be avoided and other impairments, such as loss, attenuation/frequency distortion, delay distortion, and echo, may also be increased.

Network Management Considerations

As the telecommunications network grows, it is designed for greater efficiency and carries a larger volume of traffic. Its vulnerability to overload and breakdown also increases. Since the dependance on communications extends into every phase of life, the control and management of the network assume increasing importance.

Control and management are exercised through mechanisms designed for a number of different aspects of network operation. The restoration control centers, set up as a means of administrating emergency restoration activities, are an example. Since restoration often involves a number of different areas and/or operating companies, efforts to accomplish efficient restoral of service in the shortest possible time could not succeed without direction and coordination from these centers.

Network traffic control is administered from designated points called network management centers. At these centers, switching machine traffic is continually monitored for possible overload condi-

tions. Overload may occur as a result of anticipated events, such as holidays, or of unanticipated events, such as a major fire, storm, or earthquake. When these events cause switching machine overload, modes of operation are altered so that alternate routing is reduced or eliminated. Under overload conditions, attempts to find an alternate route through or around a blocked point compounds the overload by permitting added attempts that cannot be successfully completed. Other similar modifications of network operation can be controlled from the traffic management centers. For example, bulk traffic between two cities may be rerouted via an office not normally used for connections between the two cities.

REFERENCES

1. American Telephone and Telegraph Company. *Telecommunications Transmission Engineering,* Volume 1, Second Edition, (Winston-Salem, N. C.: Western Electric Company, Inc., 1977), pp. 533-653.
2. Schenker, L. "Testing in the Loop Plant," *Bell Laboratories Record,* Vol. 50 (Feb. 1972), pp. 53-57.
3. Bowker, M. W. "Testing Cable Pairs . . . Fast," *Bell Laboratories Record,* Vol. 50 (Mar. 1972), pp. 87-92.
4. Cuilwik, A. "Monitoring Remote Transmission Stations," *Bell Laboratories Record,* Vol. 54 (May 1976), pp. 120-126.
5. Sanferrare, R. J. "E-Telemetry: Inside Story of Centralized Maintenance," *Bell Laboratories Record,* Vol. 52 (Dec. 1974), pp. 345-350.
6. Buus, R. G., D. L. Rechtenbaugh, R. B. Whipp. "T-Carrier Administration System Speeds Service Restoration," *Bell Laboratories Record,* Vol. 53 (May 1975), pp. 217-225.
7. Anderson, M. M., D. V. Helsing, and A. Mizrahi. "CAROT for Automatic Trunk Testing," *Bell Laboratories Record,* Vol. 50 (Feb. 1972), pp. 322-329.
8. Sennewald, P. F. et al. "Something Special," *Bell Laboratories Record,* Vol. 54 (June 1976), pp. 142-174.
9. Giunta, J. A. "Linking People and Systems for Better Trunk Maintenance," *Bell Laboratories Record,* Vol. 54 (May 1976), pp. 127-133.
10. Rice, L. P., D. C. Rife, and G. A. Vincent. "Testing Data Sets Automatically," *Bell Laboratories Record,* Vol. 54 (July/Aug. 1976), pp. 193-198.
11. Dargue, F. B. "SMAS No. 3 for Fast and Accurate Toll Trunk Testing," *Bell Laboratories Record,* Vol. 51 (Jan. 1973), pp. 19-24.
12. Pennington, W. H. "A New Strategy for Operations," *Bell Laboratories Record,* Vol. 54 (June 1976), pp. 144-148.
13. American Telephone and Telegraph Company. *Telecommunications Transmission Engineering,* Volume 2, First Edition, (Winston-Salem, N. C.: Western Electric Company, Inc., 1977), Chapter 15.

Chapter 21

Transmission Facility Planning

The management and control of the transmission performance of the switched public network and of the many special services which share facilities with the switched network can only be achieved and maintained by careful and thorough planning. In the loop plant, transmission performance is controlled by the design and construction of outside plant facilities according to methods which have been developed to achieve a balance between costs and an acceptable grade of service. Interoffice performance is controlled primarily by the design of transmission systems. Switching systems and other equipment which act effectively as transmission interfaces between various portions of the network all must be designed and operated to meet transmission objectives. The continuing growth of the network must be provided for by well-defined plans prepared several years in advance of the date new facilities and equipment will be needed.

When additional trunks or special services circuits are needed, they are usually installed on existing transmission facilities where spare capacity is available; however, where spare capacity does not exist and can not be made available by rearrangements, new facilities must be constructed in the form of new cables or new carrier or microwave radio systems. It is difficult to separate trunk and special services circuit planning from facility planning. Furthermore, these transmission services often share the same facilities. These interrelated factors are discussed to show their impact on the planning processes.

The facility planning process is carried out somewhat differently to meet metropolitan, outstate, and intercity or interstate needs. For example, average construction costs are usually used to evaluate

metropolitan facility costs but in outstate, intercity, or interstate construction (which usually covers longer distances and greater differences in terrain and environment) specific costs must be used. Another significant difference is that underground conduit is often used economically in metropolitan environments but is only occasionally found to be economical for outstate, intercity or interstate situations.

Interoffice facility planning is usually carried out in an organized and structured manner by organizations dedicated to fulfilling this responsibility. Technical data on transmission, space, power, cost, and compatibility of various systems must be made available to these organizations. In addition, forecasts of needs for the period covered by a study must be collected from sources such as traffic, traffic engineering, commercial, sales, and marketing organizations. A complete knowledge of existing facilities is also necessary so that reasonable predictions can be made of how long these facilities can fill the needs and when spare facilities are expected to be exhausted. Thus, while planning studies are usually carried out in organizations not directly involved in transmission, information must be supplied by transmission engineering organizations to support planning activities.

Geographical areas of study must be defined and planning models must be developed. Alternative means of furnishing adequate service over a specified time span must be selected for study. Consideration must also be given to interactions between the developing plans for the selected study area and those of adjacent or overlapping areas of other companies. The results of the studies must be evaluated and documented for management approval and ultimate implementation.

21-1 FACILITY PLANNING FUNCTIONS

Facility planning can best be performed when it is viewed as a single, closely-integrated process. This process consists of five distinct but interrelated functions: economic and service planning, documentation and coordination, exploratory studies, cost characterization, and data base maintenance.

Economic and service planning is the central decision-making function within the facility planning process. The facility plans developed by this function should include all planned facility and equipment

construction and rearrangement activities. These plans should be economically sound in the sense of including all network effects, long-range estimates of expenditures, and all relevant cost elements. They should also lead to a network design which can be put into practice with available funds and personnel, and which provides good service.

The documentation and coordination function serves to summarize these plans in a form useful to other areas of responsibility within the company and to issue specific project requests to the various provisioning areas such as outside plant, central office equipment engineering, and the circuit provision bureau. This function also provides assignment rules to the circuit provisioning bureau to guide them in the selection of economic facility designs for new circuits. The documentation and coordination function also monitors actual construction and assignment activities to determine whether the network is evolving in a manner consistent with the plan.

The exploratory studies function does much of what traditionally has been called *fundamental* or *long-range* planning. The necessary economic studies, removed from the day-to-day decision making and budget preparation demands on the economic and service planning function, are provided by this function. Outputs of the exploratory studies function include technical planning guidelines (such as those covering the applicability of new types of transmission systems or the recommended retirement of older types of equipment) and long-range studies of alternative strategies for the evolution of the facility network. These guidelines and studies serve to assist those responsible for the economic and service planning function in developing plans; the two functions must necessarily be coordinated very closely.

Cost characterization develops and maintains unit cost estimates for the various types of facilities and equipment detailed in the planning process. These unit costs should be based on detailed estimates of material prices, engineering, installation, and maintenance costs, and the costs of any related resources such as power, floor space, or manhole space.

Data base maintenance involves the acceptance and summarization of available data on circuit demand forecasts and current facility, equipment, and circuit inventories. These data, which undergo frequent or continuous change, must be converted into a form most useful to the other facility planning functions.

21-2 FACILITY NETWORK ENVIRONMENTS

Planning studies must be constrained to specific areas large enough to be significant and should cover interrelationships with adjoining areas of the same or other companies. A major consideration in determining the boundaries of the area to be covered by a planning study is the nature of the area itself. Facility planning problems tend to be different in metropolitan, outstate, and intercity (or interstate) environments.

A metropolitan area may consist of one or more large business districts and associated suburbs. There tend to be many central offices located in close proximity with large numbers of relatively short trunks between them. As a result, the facility network interconnecting these offices is usually quite complex and the possibilities for routing a circuit between two points in the network are numerous. While these multiple routing possibilities afford a high degree of flexibility to the network, they also make the job of planning for network growth more difficult. On a long-term basis, there is usually only one optimum routing for any particular circuit group. For the short term, the growth pattern for all circuit groups, when considered in an existing facility network, often requires the selection of suboptimal circuit routings. Outside plant facilities in a metropolitan area are predominantly underground (in conduit) and highly developed, perhaps even congested. The circuits carried in the underground cables are largely voice-frequency but digital carrier systems are increasingly used, especially for short-haul interoffice trunks.

In contrast, an outstate area typically has just one wire center in a population cluster. The distance between wire centers, typically more than ten miles, is greater than in metropolitan centers. Where the number of circuits in a metropolitan cross-section may be in the thousands, the number in an outstate cross-section is more likely to be in the tens or hundreds. The outstate facilities are most often cable carrier or microwave radio systems. Where cable is used, the facilities are usually buried without conduit or may be aerial. Diverse routing is less likely in outstate than in metropolitan areas but the interplay with other companies is likely to be much greater.

The network of predominantly high-capacity transmission facilities that interconnect both metropolitan areas and smaller, outstate subnetworks with each other makes up the intercity environment. The facilities normally terminate in major toll centers or, in some cases,

large but isolated end offices. The routes tend to be long and comprise a large and rapidly-growing cross section. The possibilities for diverse routings in such networks tend to be greater than in the out-state networks but less than in major metropolitan areas. The inter-state network has most of these same characteristics, with even greater lengths, capacities, cross-sections, and circuit growth.

21-3 INPUTS TO THE PLANNING PROCESS

Several different kinds of data are needed to support the planning of the interoffice facility network. These include (1) data on existing facilities, equipment, and circuits, (2) forecasts of future circuit demands, and (3) estimates of the costs for installing new facilities and equipment and for rearranging the existing network.

Data on the Existing Network

In order to provide continuity in the planning process, statistics on the availability and utilization of currently installed equipment and facilities as well as information developed in previous planning cycles must be maintained at all times. The data must be compressed to minimize the number of classifications consistent with the information needs. Fortunately, planning does not require the amount of detail needed to design, install, and maintain individual circuits. Proper classification of data is important since it reduces the number of alternatives to be considered to a manageable number. For example, seven complements of 22H88 cable pairs, each with slightly different physical and electrical characteristics, could be considered for planning purposes as one group of 22H88 pairs.

Facility Data. Up-to-date records regarding facilities are required at all times for planning purposes. Administrative factors which may affect the use of facilities, such as dispersion or diversity or whether they are leased or owned, must also be recorded so that company policies are adequately implemented. The electrical and physical characteristics of various types of facilities must be recognized and properly accounted for in allotting circuits to the facilities. A complete inventory must be available with each facility identified; those installed and ready for service are called *in-effect* facilities. It is also necessary to have an up-to-date list of facilities which have been approved for construction but are not yet available for use. Facility additions, identified and proposed but not yet approved, must also be

listed for continuing planning purposes. Finally, the number of units of a particular facility and their assignment status (working, spare, defective, etc.) must be known.

The *facility group,* the basic entity of classification in the planning process, is a collection of all the direct facilities of one type between two nodes (usually toll or local wire centers) in the network. In most cases, the facility group provides adequate detail for use in the planning process. However, in some instances, a facility group may cover too wide a range of characteristics. Differences in routing or mixed-gauge cable complements may cause physical and electrical characteristics to be spread over too wide a range. Dispersion or diversity may be considered to be a major factor in routing circuits; physically separated facilities may therefore need to be identified. In these cases, it may be necessary to divide facility groups into subgroups; however, the effect of subdivision on the complexity of the planning model must be considered.

In order to evaluate different but coterminus facility groups, it is desirable to combine several facility groups into an entity defined for planning purposes as a *link,* a collective term for direct facilities between two nodes regardless of type or routing. Figure 21-1 illustrates facility grouping.

Equipment Data. Much of the required equipment data is quite similar to that required for facilities. Since there are many more equipment types than facility types, it is necessary to reduce the equipment entities to a manageable number by combining types. The basic types which must be considered are voice-frequency and carrier transmission, signalling, and trunk relay equipment.

Some types of equipment such as pad sockets, test jacks, and tie cable pairs can be safely ignored in trunk planning. Certain wired-in equipment and mountings which have long ordering intervals must be determined in considerable detail for each location. If plug-in units are included, the detail required need only be sufficient to develop material planning factors and to estimate budget requirements.

Most equipment currently being manufactured is of the plug-in type and uses universal type mountings; therefore, the number of entities of new equipment which must be considered in the model is manageable. However, some equipment no longer manufactured must also be considered in planning since much of it is currently in use

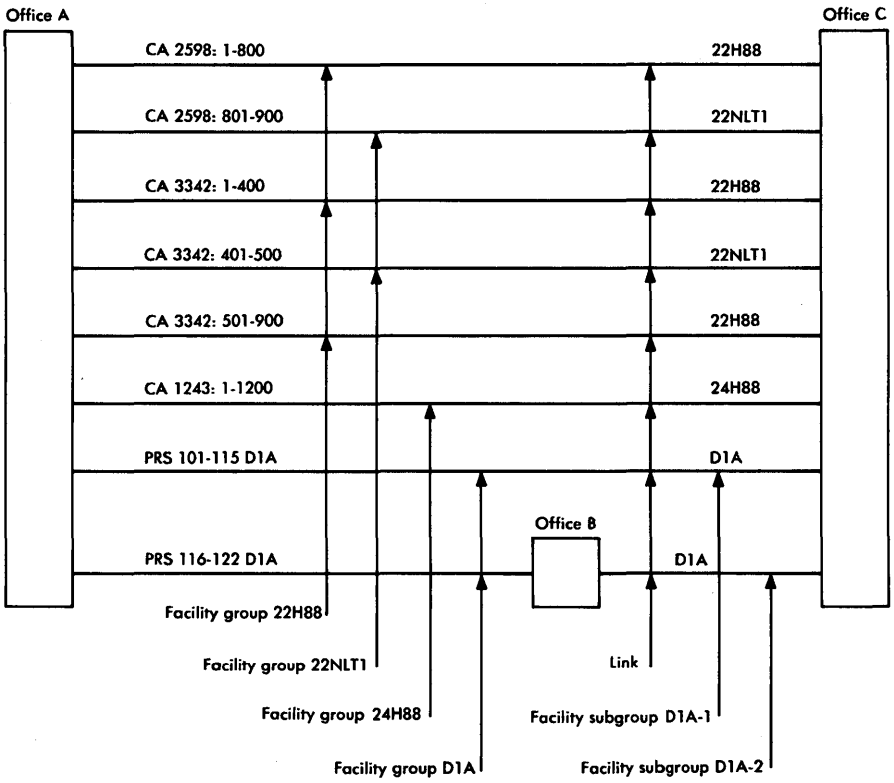

Figure 21-1. Facility grouping.

and spare units can sometimes be exploited in lieu of buying new equipment. Since this equipment is usually permanently wired, it tends to increase the number of types of equipment which must be considered in the planning process.

Circuit Data. Information on the existing assignments of circuits to facilities can be useful in the planning process in at least two ways. First, the existing assignments for circuits serving a similar function between any two points can serve as a starting-point for constructing a set of standard circuit group designs. Second, knowledge of the circuits which are currently using an exhausting facility can assist in the identification of those which are candidates for rearrangement as a way of deferring relief.

Forecasts of Circuit Demands

In order to plan adequately for new facility construction, there are many circuit and trunk forecasts that must be combined. Circuit forecasts must include plant and traffic operations circuits, wideband data and video channels, voiceband and subvoiceband special services, and customer loops.

For the message network, trunks may be grouped by type for each pair of end points since it is necessary to know how many intertoll, toll connecting, tandem, or direct trunks are needed during the time period under study. These trunk groups might also have to be subdivided because there is a need for planning the various types of trunk equipment required since these may differ according to the types of switching equipment used. Special services circuits must also be grouped according to similarities in function or design.

In order to evaluate fully the long-term economic impact of the alternatives being considered, circuit forecasts should cover a period of twenty years or more. Although the confidence in such a forecast is necessarily less in the later years, the forecast should reflect all major known or planned influences on circuit demand. For message network trunks, this would include not only anticipated growth in customer calling but also any planned changes in the configuration of the traffic network (i.e., routings and homings of traffic through the various switching machines). For special services, the forecast should reflect major industrial or commercial development and any planned changes in the tariff structures associated with special services.

21-4 ELEMENTS OF ECONOMIC AND SERVICE PLANNING

Facility planning for a study area requires detailed knowledge of the environment and of the conditions that may initiate a specific planning study. The many sources of data must be recognized and a thorough understanding of the potential performance and costs of the alternatives is also necessary.

Planning is essentially a continuous process. At any given time, there should exist a view of the evolution of the facility network which is based on the best available information. Although the greatest single product of the planning process is the three-year construction program, the planner should also have an extended (probably less detailed) view of the network in the fourth year and beyond. Such an extended view is not only useful within the planning process

but also allows long-range planning functions outside of facility planning (such as personnel planning or capital financing) to anticipate the requirements of the facility network.

Planning Studies

While planning is essentially a continuous process, specific studies must sometimes be undertaken for guidance and direction. A specific study can be stimulated in many ways. The most familiar mechanism is the impending exhaustion of spares in the existing facilities. In this case, the study is sometimes referred to as exhaust-triggered. Other stimuli include the approval of new technical planning guidelines or the adoption of new corporate policies. For example, a study might be initiated as a result of decisions to replace open-wire facilities for storm-proofing considerations. Addition of new wire centers or additional switching capability can also lead to trunk and facility planning studies. The exhaustion of facilities in adjacent areas or in interacting routes can also result in local planning activity.

Budget estimates are prepared initially three years in advance of the year of need in order to help smooth such new construction into the planned program. In addition to program smoothing, the three-year advance budgeting is needed to accommodate the engineering, manufacture, installation, and testing intervals that precede the service date for new facilities. Specific planning studies sometimes lead to a recommendation for new construction which may represent a substantial part of the construction budget for a given year. With these considerations, it must be recognized that it becomes progressively more difficult to incorporate a large new project into the budget as time progresses.

Selection of Alternatives

In specific planning studies, careful consideration must always be given to the various ways in which relief can be provided on a congested route or in an exhausted facility. The basic alternatives are reroutes and new construction. Each has subclasses of alternatives that must be taken into account and in some cases the two alternatives overlap.

Circuit rerouting is often an attractive means of providing additional capacity especially when there is apparent spare capacity in the alternative route. Consider Figure 21-2 as a simplified illustration

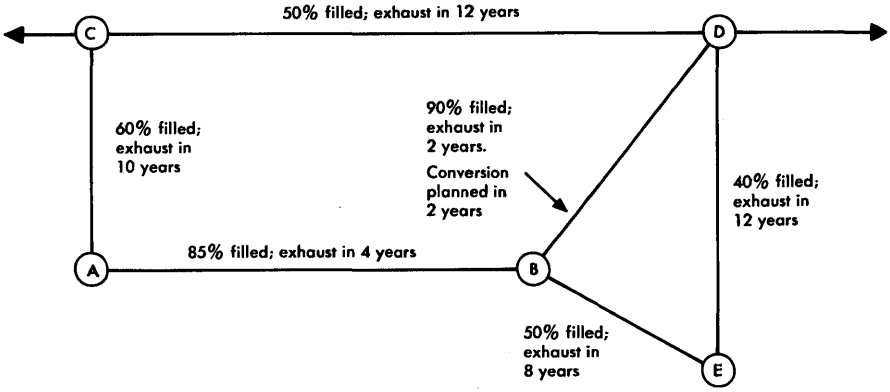

Figure 21-2. Simplified planning area with alternative trunk routings.

of a problem of providing trunks in the route between offices A and B. At the time of study, the capacity is 85 percent utilized and the route facilities are expected to exhaust in four years. Nearby, a major parallel route passing through offices C and D has 50 percent spare capacity and is not expected to exhaust for at least 12 years. Other interconnecting routes are shown between A and C, B and D, B and E, and D and E. It appears that circuits between B and D can be rerouted (or rearranged) over the facilities between D and E and then between E and B (back-hauling) to free some of the capacity in the route between B and D for additional circuits between A and B. These may now be provided over the facilities between A and C, C and D, and D and B. New construction on the route between A and B might thus be deferred for several years.

The same figure may be used to illustrate another alternative, that of bypass construction. Several years earlier than the figure represents, the facilities between D and E had not been installed. In anticipation of the need for these direct facilities and in anticipation of the exhaustion of the route between A and B, the facilities between D and E may have been installed, intentionally bypassing B where growth rates were lower because of stabilization of the population near B.

The second major alternative is new construction, one form of which is illustrated by the planned conversion of facilities between B and D in Figure 21-2. An example of this option is the conversion of N2-type systems to N3-type systems, a conversion (assuming the prior existence of N2-type systems in that route) that would double

the number of trunks available between B and D. Another form of new construction is that of overbuilding, i.e., the addition of a microwave radio system to outside plant facilities on an existing route. This is possible where the new system operates in a frequency band different from that of the original. A completely new installation is another possibility that must be examined. Such construction might involve the installation of additional voice-frequency cable facilities, cable carrier systems, or microwave radio systems.

Many factors must be considered before a final choice is made from the available alternatives. These factors include the possible deleterious effects of rerouting and rearranging circuits (e.g., longer circuits and costly wiring changes), the magnitude of circuit needs, and the capacity of the systems being considered. Also, the interactions with other study areas, the relationships between proposed solutions, the capacity and design of existing buildings, and environmental factors that may favor microwave systems or cable systems must not be ignored. A well-organized planning study usually includes the evaluation of three to six alternative solutions of a given problem. The alternative plans should all possess a degree of flexibility that allows for upward or downward changes in forecasts.

21-5 THE PLANNING MODEL

The network is simulated by one or more mathematical models, called planning models, on which circuit demand may be overlaid and evaluated for its effect on the network. By manipulating various parameters of the model, different circuit routing arrangements may be tried. After several iterations, the arrangement which results in the most economical use of the network may be selected.

Different planning models may be used to satisfy the requirements of different network environments or different phases of the planning process. A model oriented toward intercity network planning does not satisfy the needs of a metropolitan area study. Similarly, a model oriented toward the development of an economical facility layout may not help in developing a detailed office-by-office equipment plan. The following discussion is based on a generic planning model to illustrate the important features of such a planning model.

In order to evaluate the network properly and to identify those areas requiring relief, there are certain criteria which must be applied in developing and using the planning model. The various factors involved (facilities, equipment, circuits, and circuit demand) must be

grouped to minimize the number of variables. The model must include existing circuits as well as growth circuits since planning is concerned with attaining optimum utilization of the network, not just providing for growth. Information must be continuously provided from the operating environment to ensure that the model faithfully represents the network being studied. Changes in the operating environment and/or forecasts must be evaluated promptly so that the model can be updated and relief plans modified accordingly. The model must also cover an area large enough to include all pertinent facilities and to include overlap and interaction with contiguous areas of other companies.

Five basic functions must be identified and documented in the development of any planning model.

(1) *Circuit group routing* involves the identification of combinations of existing and proposed facilities between various locations in the network.

(2) *Circuit group design* requires the development of configurations of facilities and equipment to provide workable circuits using various circuits routings.

(3) *Design allocation* involves the allocation of circuit demand to various circuit group designs when more than one design is applicable to the same group of circuits.

(4) *Facility routing* is the development of layouts that show the various groups of facilities and their geographical routes and locations.

(5) *Equipment planning* is the summarization of equipment requirements, by location, and the determination of how existing and new equipment are to be used to satisfy the needs.

Based on existing and proposed facilities, feasible circuit group routings are developed in the planning model between all pairs of locations for which circuit demands exist. Subject to various design and economic constraints, circuit group designs are produced for one or more routings. Where more than one circuit group design exists, allocations to each design are developed on the basis of economic considerations (possibly reflecting the conclusions of prior studies that may have used other planning models) and existing circuit arrangements. Circuit demands are allocated to various designs and then requirements for equipment and facilities are summarized. For

voice-frequency facilities, circuits which are routed through common links are summarized on the basis of facility routings. After evaluating the results obtained with a particular version of the planning model, the allocations or other parameters of the planning model may be modified for improvement.

The model should be updated as circuit groups and facility groups are added or eliminated; however, no major revisions should be required since the network tends to remain relatively stable. A properly designed and maintained model should minimize the amount of effort required to produce timely and economical relief plans. At the beginning of each new planning year, it is necessary to advance various parameters of the planning model by one year.

Circuit Group Routing

Depending on the grade of facility required, there may be several sets of circuit routings between any pair of locations. Voice-grade circuit routings are the most common but additional routings may also be required to provide for narrowband (telegraph grade) circuits and wideband circuits such as those used for program services. Preferred routings must also be developed for analog and digital carrier systems.

Circuit group routing involves the identification of all feasible combinations of tandem-connected facility groups which allow transmission paths to be established between two nodes in the network. In practice, the numerous possible combinations of facilities that may physically exist are reduced by various electrical and administrative constraints. While many of the circuit routings which are thus identified may not appear to be economical, they are listed as possible alternatives. The result of such a process of identification and elimination is illustrated in Figure 21-3.

In selecting alternative arrangements, an excessive number of cross-connections is not desirable from an assignment and plant workforce standpoint. Therefore, a maximum number of tandem facilities is established and all facility routes exceeding the maximum are excluded. The resistance limits of commonly used signalling arrangements are established for all circuit routings using voice-frequency facilities. For most voice-frequency circuits, there is a maximum amount of transmission loss beyond which practicable arrangements

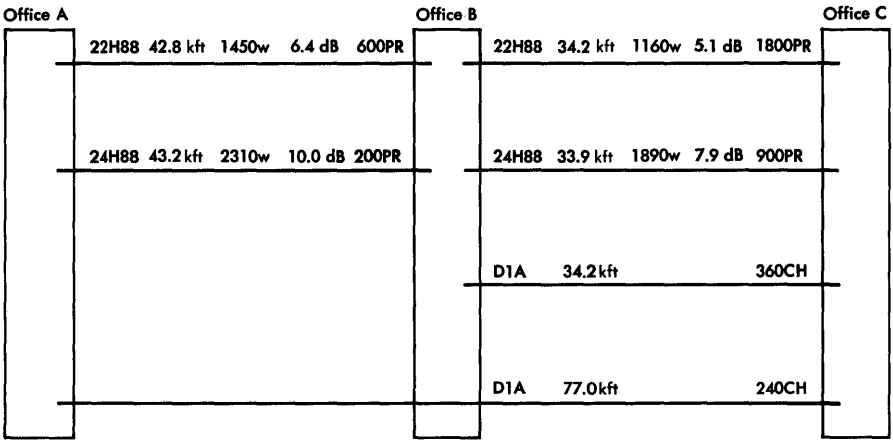

ROUTE	FROM	TO	CKT GROUP	LG, kft	RES, ohms	LOSS, dB	CKTS PER GROUP
1	A	C	D1A	77.0	—	—	240
2	A	B	22H88	42.8	1450	6.4	600
	B	C	22H88	34.2	1160	5.1	1800
	A	C	—	77.0	2610	11.5	600
3	A	B	22H88	42.8	1450	6.4	600
	B	C	24H88	33.9	1840	7.9	900
	A	C	—	76.7	3290	14.3	600
4	A	B	22H88	42.8	1450	6.4	600
	B	C	D1A	34.2	—	—	360
	A	C	—	77.0	—	6.4	360
5	A	B	24H88	43.2	2310	10.0	200
	B	C	22H88	34.2	1160	5.1	1800
	A	C	—	77.4	3470	15.1	200
6	A	B	24H88	43.2	2310	10.0	200
	B	C	24H88	33.9	1840	7.9	900
	A	C	—	77.1	4150	17.9	200
7	A	B	24H88	43.2	2310	10.0	200
	B	C	D1A	34.2	—	—	360
	A	C	—	77.4	—	10.0	200

Figure 21-3. Alternative circuit routings between offices A and C.

of gain devices are not available and/or where temperature regulation is impractical. Therefore, a maximum value of transmission loss is established and all voice-frequency facility routings which exceed this value are rejected. For economic and transmission reasons, it is not desirable to interconnect too many carrier channels (back-to-back operation). Thus, a limit on the number of tandem-operated carrier facilities in a circuit route may be applied.

Other constraints result from the nature of the route under study. For example, there are some facilities which, because of their small capacity relative to the growth rate of the circuit demand, would not be logical candidates for a circuit route. Therefore, a ratio of cross-section size to growth rate is established to exclude some circuit routes unless an indication of willingness to augment the small cross-section has been provided. Route length may also involve the application of constraints. In most instances, the shortest route between two points would be the most economical. The economic effect of large differences in route length are not as pronounced for carrier facilities in a metropolitan area since the major portion of carrier costs are in terminal equipment and are relatively independent of route length.

Circuit Group Design

Equipment and facilities which may be required by a particular circuit group are identified in the planning model as a circuit group design. The designs are produced for layouts which are being considered for growth and for those already installed and operating. The inclusion of the latter in the planning model allows all currently working equipment and facilities to be identified.

Economic analysis usually leads to the exclusion of all but one basic configuration for a particular circuit routing. However, because of differences in equipment vintage and location, it may be necessary to include several designs for the same basic configuration. Some designs may be eliminated because of administrative constraints such as prohibition of the use of a given type of equipment in a building where floor space is limited.

Design Allocation

A number of different designs of a specific circuit group must sometimes be included in the planning model. Changes in cost factors may cause a newer design to become more attractive than an older design,

or a design might be favorably considered for reasons of inventory utilization. The optimum design for a circuit group may be one that utilizes existing facilities and/or equipment with excess capacity. Service and/or customer requirements for separate routings to achieve service protection may dictate the use of different designs. Local channel characteristics and circuit operation may require different configurations of facilities and equipment to satisfy special services circuit needs.

It would not be economical to discontinue many in-service older designs and to rearrange the circuits they represent to newer layouts. Therefore, older designs are retained in the planning model and newer designs are provided for growth. Also, multiple designs may exist in the planning model because of dispersion or diversity and for various special service groupings.

In the planning model, circuit demand cannot be applied equally to all designs in a circuit group. Therefore, the circuits which comprise the group must be distributed among the designs in accordance with allocations established for each design. In order to minimize the effect of forecast changes and thereby allow allocations to be carried from one planning cycle to another, allocations should be expressed in percentages wherever possible. Three basic types of allocations are encountered.

(1) Current distribution: the number of in-effect circuits which use each design is obtained from circuit layout and assignment records. These data establish a base from which changes in circuit group demand may be evaluated.

(2) Growth: the allocation of new circuits is usually made to those designs for which equipment and facilities are available or can be augmented. Normally, the most economical designs are designated for growth; however, multiple designs may be allocated on a percentage basis because of dispersion, diversity, or because of differences in special services circuits.

(3) Rearrangements: decreasing or discontinuing an allocation to one design with a corresponding increase in the allocation to one or more other designs is sometimes necessary in order to satisfy the need for circuit rearrangements.

There are a number of factors which must be considered individually or in combination when allocating a portion of the circuits in

a group to a specific design. One such factor is the determination of the design for a particular circuit group that has the lowest average allocated (per-circuit) cost. If no other factors are present or if other factors are of minor significance, all circuits would be allocated to the design with the lowest allocated cost. Although a design based on allocated cost may appear to be more economical than the existing design, savings can only be realized if the change of an existing design results in either the deferral of expenditures for facilities and equipment or annual charge savings or both. Excess capacity may exist at various points in the network due to recovery from network rearrangements or the incremental size of some facility and equipment additions. Therefore, the use of designs which exploit this capacity may be more economical than the use of a minimum-allocated cost design requiring new construction. For special services circuits, differences in local channels and circuit operations may not be defined in the circuit forecast and it may be necessary to allocate growth on the basis of current distribution. Design allocation may also result in a reduction or discontinuance of a substandard design in order to improve service or implement a new service.

In addition to these factors which affect design allocations, provision must be made for contingencies. Relief plans developed by earlier iterations of the planning model are generally based on allocations to the theoretically most economical relief plan. However, coordination with implementation functions may reveal factors which may not allow relief to be provided as planned. Manpower or manufacturing and installation limitations may not allow relief to be added by the time required. Conduit reinforcements or building additions may have to be advanced at an excessive economic penalty, although such factors should be anticipated in preparing the plan and included in the planning model. Therefore, design allocation may have to be altered to allow realistic relief plans to be developed.

Facility Routing

In planning for the installation of new cables (cable relief), it is necessary to summarize requirements for all facility groups which pass through a particular network link. This requires a correlation, known as facility routing, between each facility group and the links through which it passes.

For all such cable facility groups, a single facility routing is assumed. Therefore, a facility routing would indicate the route along

which relief is to be provided rather than where the cables are actually to be located. Facility routings should be developed to satisfy simultaneously the needs of interoffice facility and outside plant planning.

Equipment Planning

Once the preferred design allocations have been made for each circuit group in the network, the equipment requirements can be summarized for each location. At this point, these requirements are normally given in functional terms, such as a two-wire gain device or a digital carrier channel unit. Once these functional requirements are known, comparisons can be made with existing equipment inventories in the particular location and decisions can be made as to the appropriate "source" for each requirement (existing spare, reuse, or new). In addition to the inventory data, other inputs to equipment planning include technical planning statements on the economics of new equipment types, retirement guidelines, and the availability of floor space and power plant capacity in the office. In addition, provision must be made for the requirements of intra-office special services (such as PBX trunks) in the total equipment planning job.

21-6 EVALUATION OF SPECIFIC STUDIES

The specific studies that are undertaken as parts of the planning processes must be evaluated on the basis of various data that are collected and applied to the planning model. The compiled data must be organized and summarized in specific ways in order to permit network evaluation and to develop plans for orderly growth of the network.

Data Summaries

Planning data are summarized in several significant categories. The most important and useful of these are known as facility, equipment, circuit, management, and special summaries.

Facility summaries are compiled for a study area to show statistically how proposed and planned facilities are related to existing facilities. The information may be summarized by facility group, link, or node, as required for the planning process. Basically, most facility summaries show how completely the circuit capacity is being used at strategic points in the network.

The primary purpose of equipment summaries is to identify requirements by location for wired-in and plug-in equipment and mountings for an entire area. Important components of such equipment summaries are the various categories of carrier system equipment.

Circuit summaries provide such information as point-to-point circuit demand which cannot be obtained from facility or equipment summaries. These include special services circuit estimates as well as estimates or forecasts of network trunk needs [1].

Management summaries provide measurements of the effectiveness of the planning process. Included in these summaries are utilization statistics, circuit rearrangement rates, and inventory control.

Special summaries are listings of information not required for the day-to-day planning process. For example, if there has been a change from fifteen to twelve miles in the point at which carrier system trunks are equal in cost to voice-frequency trunks, a listing of all circuit groups between twelve and fifteen miles long may be summarized for study.

Use of the Planning Model

The planning model is developed on a circuit-group-by-circuit-group basis. When equipment and facility requirements are summarized for all circuit groups, factors begin to appear which were not evident as the circuit group information was assembled. Careful evaluation of the plan may lead to modification.

When it has been determined that the planning model is reasonably accurate, relief of equipment and facilities which are becoming exhausted may be planned. Relief plans should utilize existing plant to best advantage and permit an economical program of plant additions and rearrangements. As a result of the process of evaluating a specific study, design allocations may have to be modified to reflect the development of a viable construction program.

Rearrangements. Before attempting to identify locations where construction is required, the possibility of rearrangements should be considered. Rearrangements involve the transfer of circuits to other locations in the network where spare capacity exists or is to be constructed. Judiciously planned rearrangements can enable the development of an orderly and economical construction program while

allowing the network to evolve toward the configuration envisaged in the fundamental planning processes.

Exhausted plant may contain circuits which are misrouted and these circuits might now be more properly assigned to their fundamental routes or to other equipment or facilities. Circuits are classified as misrouted because (1) the current assignment is in accordance with a preferred design that has been superseded by a newer design using different equipment and facilities, (2) the current assignment is a temporary routing being used until new plant is constructed in accordance with the most economical plan, or (3) the current assignment is a temporary routing being used to defer construction in some other part of the network. Misroutes may also include circuits which use a different type of equipment or facility than that specified in the preferred design.

It is not usually desirable to transfer circuits which are economically assigned to the exhausted plant to some other part of the network. The creation of such misroutes usually requires subsequent rearrangement to return the circuits to the preferred layout. However, conditions may prevent new construction projects from being completed by the expected exhaust date. In such cases, the creation of misroutes is unavoidable. If this condition is recognized well in advance and spare capacity is available elsewhere, it would be preferable to misroute new circuits in advance of the exhaust date.

While rearrangements do offer alternatives to the construction of new plant and often enable more efficient utilization of the network, they are not always an acceptable solution. For example, the cost of rearrangements may offset any savings realized by deferring relief or using more economical equipment and facilities. Rearrangements often require more effort than the installation of new circuits. Also, several rearrangements may be required in sequence to provide relief. Complex rearrangements should be avoided because of the coordination problems created. Finally, rearrangements tend to advance the exhaust date of the plant to which the circuits are being transferred. The cost of advancing the relief of this plant may offset the savings of deferring augmentation of the exhausted plant.

Augmentations. After all possibilities for deferring relief by rearrangements have been evaluated, additions to equipment or facilities must be studied. The solution may come in the form of new construction, conversion to systems of greater capacity, or additions to existing

microwave radio routes (overbuilding). The planning of rearrangements, the planning of augmentations, and the allocation of circuit demand to various designs are interactive processes.

It is important, and sometimes rather difficult, to identify portions of the network in which new construction, conversion, or overbuilding should not be undertaken since average costs may not be applicable. Actual field conditions, such as conduit or building congestion may affect the economic timing of an augmentation and resource constraints, such as available funds, manpower, or material, may limit the scope of what can be accomplished during a given time period.

It may not be economical to construct new cable facilities when the rate of growth can justify only a small addition. Consideration should then be given to consolidating wire gauge, loading, and route requirements into a single larger addition which may offset the cost of using higher-grade facilities or longer routes for some circuit groups. Furthermore, one large group of facilities allows more efficient utilization and flexibility than several small groups.

Where economically feasible, direct cable facilities should be provided between nonadjacent as well as adjacent nodes. When this is not feasible and facilities must be routed via an intermediate node, consideration should be given to splicing through a number of pairs as direct complements thereby eliminating the need for cross-connections at the intermediate location. Since direct complements reduce flexibility, they should be designed to operate at high fill with additional capacity provided by cross-connecting at intermediate nodes. A rapid growth rate or rearrangements of circuits into the direct complement are factors that contribute to a high and efficient fill.

While voice-frequency cable circuits tend to be somewhat more economical than carrier circuits over short distances, carrier circuits do have certain economic advantages [2]. For example, carrier systems can be installed in smaller increments than most cable, thereby reducing first costs. Carrier equipment can also be reused for other carrier systems. Therefore, carrier may be economically attractive as temporary plant to defer cable construction on short routes in the following situations:

(1) When a major conduit reinforcement program must accompany the cable construction

(2) When uncertain demand does not allow the proper cable size to be determined

(3) When an anticipated reduction in circuit demand (negative growth) may be expected to relieve the cable in the near future

(4) When resource constraints limit the amount of cable which can be placed during a construction program year.

Information must be obtained from many sources to determine the economical size of an augmentation. For example, the economical size of a trunk cable addition must be related to outside plant planning since loop cables, which contend for the same resources and structures, affect trunk cable additions. Thus, the planning model must include outside plant and other programs related to circuit, equipment, and facility growth.

In addition to augmentation, the need for removal or retirement of excess or obsolete plant must be considered. Plant which is not being used is an economic liability because it extends the average service life of plant investment. It also consumes valuable structures, floor space, power, and air conditioning capacity and continues to incur expenses for maintenance, ad valorem taxes, etc. Since it may be reusable at other locations, the need to purchase new plant may be eliminated. Therefore, idle plant must be identified and action to have it removed must be implemented as parts of the planning process.

21-7 DOCUMENTATION AND COORDINATION

When planning has been concluded, effective steps must be taken to implement the plan. Implementation requires that planning results be documented for use by the various organizations involved in the implementation processes. Furthermore, the expenditure of large sums of money are involved and appropriate approvals are required.

Documentation of the facility plan falls into three categories: (1) construction project documentation, (2) instructions for circuit layout and assignment, and (3) coordination information. The appropriate data must be extracted from the various studies and arranged in a meaningful and useful format.

Construction Project Documentation

The ultimate purpose of the current planning process is to determine how, when, and where additions to the network are to be made by conversion, overbuilding, or new construction. The documentation must include supporting data required for approval, information required for detailed engineering of specific construction projects, an overall view of all network projects, and a listing of requirements for other planning organizations. Data required for detailed engineering includes such information as the cable pair requirements by facility group so that trunk cable design complements can be specified and the preferred location of equipment in an office or the relationship of one type of equipment to another can be indicated.

While each authorization for new construction in the network must stand on its own merits, the construction program must be considered in its entirety since one authorized project may affect or be affected by another. An overview of the program should show an outline of all major additions; capital, material, and manpower requirements should also be shown. In addition to planned projects, the overview should indicate anticipated circuit growth and planned rearrangements. Statistics on network utilization efficiency should also be included.

Implementation of a plan involves and interacts with other areas of the same or other companies. These organizations must be advised of plans which involve their operations so that the plans can be coordinated with planning of their respective construction programs.

Circuit Layout and Assignment

In addition to the construction of new plant, implementation involves activity relating to circuit layout and assignment functions. To ensure that this activity is consistent with current plans, appropriate documentation should be furnished for circuit layout and assignment. This documentation includes assignment guides, reservation requests, carrier system orders, and rearrangement requests.

For each circuit group, there are usually a number of possible ways of installing circuits. Therefore, assignment guides and circuit layouts must be prepared for each group to indicate which configuration of equipment and facilities is to be used. Although several designs may be included in the planning model for a circuit group, assign-

ment guides are prepared for only those designs to which growth is allocated.

In order to ensure that growth-allocated equipment and facilities are not used up by unanticipated special services demands, information must be furnished for circuit layout and assignment records to allow the required equipment and facilities to be reserved. These reservations may be made on either an individual circuit basis or a bulk basis. While a reservation does not prevent reserved inventory from being used for unplanned circuits, it does provide a mechanism for identifying possible premature exhaustion of equipment and facilities. Because equipment and facilities are constantly being constructed and because forecasts of circuit demand change, such a reservation program requires careful management.

Circuit order work is required before carrier channels can be made available for assignment to message trunk and special services. Information showing the authorization for the installation of carrier systems (including the span-by-span preferred routing) must be made available so that appropriate circuit order documents may be issued and record-keeping initiated.

During the development of a new facility plan, the need for rearranging various circuits in order to achieve a desired network configuration must be furnished. This type of information on planned rearrangements should be available so that circuit order work may be carried out during slack periods.

Coordination Information

The installation of a particular group of circuits may depend on the coordination of several construction projects, carrier system installations, and rearrangements.

The coordination process is documented in the form of a dependency chain which indicates the construction, carrier system, and rearrangement work upon which each circuit group addition depends. Since it is necessary in the developing process to assume the completion of certain work in order to meet circuit demand, the dependencies are known. The dependency chain should include installation of message trunk terminations as well as facility and transmission equipment additions.

The actual construction and installation work to implement the program is the responsibility of many organizations. However, each of these organizations is primarily concerned with discrete activities. Planning integrates these activities, each of which may involve a separate authorization. All of the activities must be complete before circuits can be placed in service and some activities must be completed before others can begin. Thus, the coordination required to install only a few circuits can be quite complex.

21-8 EXPLORATORY STUDIES

The purpose of exploratory studies is twofold: (1) to provide guidance for the evolution of the facility network and (2) to suggest general principles (including the applicability of new types of transmission systems) to the economic and planning function. The exploratory studies function differs from economic and service planning in a number of respects. For example, there is much less concern in exploratory studies for specific projects. More emphasis is placed on trends, gross changes, and the introduction of new technology than in the detailed solution of current planning problems. There is less concern for the impact of planning on current budget operations and much more concern about the effects of new systems, new methods, or large environmental changes on long-range factors such as costs, budgets, and revenues. In addition, exploratory studies can serve as an important liaison mechanism with the traffic network function in assessing the economic impact on facilities of a proposed change in the traffic network configuration.

The two planning functions are, of course, interrelated. Exploratory studies results must be continually revised and updated as new information becomes available. One source of such information is economic and service planning results; where these are inconsistent with the fundamental plan, the latter must often be modified to accommodate the observed inconsistencies. Wherever possible, the fundamental plan provides guidance and, to a degree, control over current planning.

Objectives and Evaluation

Exploratory studies may cover a geographical area as small as that served by a single central office or as large as the entire national or even the world-wide network. The results of an exploratory study suggest a course of action for the implementation of one or more

planning items in a geographical area. These results are expressed in terms of the objectives to be satisfied and the approximate dates for initiation and completion of the planning items. They also include summaries of the long-range financial requirements so that discontinuities can be identified. The plan is used as the vehicle for coordinating technical and financial planning as well as other facets of company operations.

A technical planning statement expresses planning objectives in a manner consistent with corporate objectives. Such a statement is usually prepared for one or more planning items, i.e., new services or the introduction of new technology that require the establishment of company policy for orderly introduction and implementation.

Planning is of little value unless some measure of its effectiveness is included in the process. After plans have been made, they must be reviewed for concurrence by all affected organizations and they must be approved by management. They are then implemented, with or without change as appropriate, according to the schedule which is a part of the plan. After implementation, the effectiveness of the planning must be measured in terms of scheduling, implementation, service satisfaction, and financial criteria.

Procedures

While procedures for conducting an exploratory network study are similar to those described for economic and service planning, they differ significantly in some details. Initially, the procedures are the same in that the geographical area under study must be defined and data on the existing network must be collected. In addition, forecasts of needs must be secured for all types of services to cover the period under study which is typically 20 or more years from the time of the study. Financial, marketing, and performance objectives must be established.

After the initial data have been accumulated and the locations for growth of facilities have been identified, various alternative methods of meeting the requirements must be considered. The alternatives must be compared in several respects (such as performance, ability to provide known and anticipated services, and costs) and the optimum solution must be selected. Provision must be made for contingencies that might arise due to forecast changes or other unforeseen events.

The results of the studies must then be adequately documented and disseminated for concurrence among many organizations. Management approval (if required) must then be obtained and the approved results must again be distributed for the use of all cognizant organizations.

The significant differences between these procedures and those applied to economic and service planning are (1) the relatively small amount of detail regarding circuits, equipment, and facilities that is used in exploratory studies, (2) the relative lack of detail in respect to the implementation of the study results, (3) the lack of direct relationship of fundamental planning to short-range construction budget considerations, and (4) consideration of a greater number of alternatives in respect to technology types, traffic network configurations, and freedom from financial or personnel constraints.

The Changing Network Environment

The history of telecommunications has been one of continued growth. In addition to growth in size, the network also grows continually in the types of services provided, the application of new technology and new methods, and in the geographical distribution of equipment and facilities necessary to accommodate population and environmental shifts. Thus, technological, sociopolitical, and economic trends must all be considered in the conduct of exploratory studies.

One of the significant population changes is the continued movement of people from rural to metropolitan areas. These shifts have produced and continue to produce concentrations of business and residence customers that have an increasingly complex impact on the design and development of metropolitan networks. In addition, there are certain environmental programs which have been considered until recently as optional but which are now in many cases mandatory. These include social changes, which have an impact on work forces, and training and safety programs, which affect many designs and operating procedures.

The growth of cities and the necessity for developing large and complex metropolitan networks have led to an increase in the use of direct toll trunks between end offices. With this trend, there appears to be an accompanying trend toward reduced use of the higher levels in the network hierarchy which may well result in a reduction of the number of levels in the hierarchy.

Several important technological advances are being introduced or are under consideration. The conversion from electromechanical to electronic switching has considerable impact on new services that can be provided and the electronic systems associated with these new services require careful transmission planning. Digital transmission systems are in extensive use in the local portion of the plant and are expected to appear in greater quantity in the toll portion in the near future. With the introduction of digital switching of toll calls, the two fields of switching and transmission are being integrated. This integration requires planning for some necessary changes in network operation. Another significant change that is being planned involves signalling. Address and supervisory signals that are now transmitted on each interoffice trunk are being transmitted over a common channel interoffice signalling arrangement. Maintenance testing and administration systems are being converted from manual to automatic and from decentralized to centralized operation.

Finally, many new services are in various stages of planning. The DATA-PHONE Digital System is being introduced so that a wider and more flexible range of digital services may be offered. Visual communications services are beginning to find a place in the network and international direct customer dialing is increasingly rapidly.

REFERENCES

1. Johnson, W. C. and W. P. Maguire. "The Trunks Forecasting System Tells What, Where, When," *Bell Laboratories Record,* Vol. 52 (June 1974), pp. 193-198.

2. Abrams, B. S. and R. B. Hirsch. "Computer Aids for Rural Route Planning," *Bell Laboratories Record,* Vol. 52 (Sept. 1974), pp. 258-264.

Chapter 22

Engineering and Management

The foundations upon which a telecommunications network must be organized and built to ensure satisfactory transmission performance are discussed in all three volumes of this book. However, there is a need for summary, overview, and perspective so that all the facets of transmission management can be combined to show how satisfactory transmission can be provided at reasonable cost.

Network conditions and growth, customer opinions of performance, and service needs, network design and operating technology, and the economic environment are all changing continuously. Thus, transmission management responsibilities can be fulfilled only by recognizing the dynamic nature of all these elements in addition to the day-by-day details.

22-1 CURRENT ENGINEERING

The problems of maintaining a high quality of transmission performance are economic and technical. While transmission management is primarily related to solving the technical problems, the solutions are acceptable only if they can also be shown to be economical.

Economic Factors

Whether good or bad, transmission performance produces no revenue directly. However, it exerts a strong indirect influence on revenues by its effect on customer acceptance of the grade of service which must be controlled by the processes of transmission management.

Such control requires sound design methods for transmission systems and facilities, the provision of adequate maintenance and maintenance support procedures and equipment, and the provision of economically feasible means of achieving service reliability.

While these requirements on transmission management appear to be straightforward, they can be accomplished only to the extent permitted by available financial resources and within the broad limits established by overall company policies. It is often necessary to fulfill transmission management functions within the constraints of limited funds. Therefore, it is a part of the management function to apply available funds in a manner that guarantees the best return in maintaining and improving transmission performance.

Transmission Quality Control

One aspect of the dynamic nature of the telecommunications network is that different impairments dominate transmission performance as the network changes. In the early days of telephony, the bandwidth limitations and nonlinear characteristics of station equipment dominated. Then, as distances increased, transmission losses had to be reduced; as a result, talker echo became a recognized limit on performance. With losses reduced by the application of electronic technology and with echo controlled by impedance balancing techniques and the use of four-wire circuits, circuit noise now appears to be the dominant impairment. A desirable attribute of noise is that it tends to mask crosstalk. As the average circuit noise is reduced in the network in response to improved designs and noise mitigation programs, crosstalk may well emerge as the next impairment to dominate network transmission performance. It is important to recognize that all of these changes and improvements have usually been in some way a result of transmission management and planning.

Coordination. Many organizations are responsible for work that may directly or indirectly affect the transmission performance of the network or its component parts. In the outside plant, routes are established and cables installed in accordance with rules designed to produce satisfactory transmission performance without further engineering assistance. Maintenance of circuits and systems and the achievement of adequate through and terminal balance are only indirectly transmission responsibilities. The establishment of new wire centers and the installation of switching machines must be monitored

and coordinated if high-quality transmission performance is to be maintained. The fulfillment of traffic and traffic engineering requirements, and marketing and sales efforts can affect transmission performance. The coordination of all such activities is a transmission management responsibility.

One effective mechanism for achieving the needed coordination of transmission-affecting work programs is the participation by those responsible for transmission management in a variety of formally organized committees. In most cases, the committee organization includes transmission engineering membership. Some examples are the intercompany service committees, trunk committees, and facility committees. The service committees are responsible for controlling special services administration, installation, and operation. Trunk committees follow and coordinate trunk installations and rearrangements while facility committees follow the progress of construction programs and make adjustments to meet emergencies and changing needs. Quality review teams are established in most companies to monitor the performance of new installations and transmission engineering participation on these teams is invited when appropriate.

Indices. Basically, transmission indices are designed to indicate the degree to which objectives are being met. Careful study of data related to indices may reveal deteriorating performance in respect to balance, noise, loss, echo, or other impairments. Continued surveillance of the data may show trends of deterioration of any one or combinations of these parameters. Where improvement programs have been carried out, the effectiveness of the programs can often be evaluated in terms of these index trends.

Customer satisfaction measurements and performance measurements are made independently. When both indices resulting from these measurements are low, performance must obviously be improved. If performance indices are in the satisfactory range but customers are dissatisfied, requirements and objectives must be reviewed and possibly made more stringent. The adjusted values must then be used to establish a new set of indices. The entire index program involves (1) the gathering, analyzing, and summarizing of performance data, (2) a review of the data, and (3) the initiation and implementation of corrective action where it is indicated. The process may be compared to a feedback system in which an error signal generates reactions which tend to reduce the error.

Grade of Service. Subjective tests are used to determine the grade of service by establishing relationships between test results and value judgments of various types of impairments [1]. Grade of service may also be used to relate transmission quality to cost. A change in magnitude of an impairment can be related to a corresponding change in customer satisfaction and to cost. Thus, changes in customer satisfaction can be related directly to the cost of improving performance.

The grade-of-service concept is so flexible in application that it can be used to evaluate the performance of an entity as small as a central office on the basis of local calls only, the performance of a small area on the basis of local and short-haul toll calls, or the performance of the entire network. To evaluate an entire switched network for loss and noise performance, average values and standard deviations on individual links that may be used in built-up connections must be specified and combined statistically. The data may be analyzed manually or by a computer programmed to process grade-of-service calculations. Typical values of loss and noise are stored in memory as a part of the program. Different loss and noise values can be substituted for comparison and evaluation of their effects on the grade of service.

The proposed introduction of a new toll or tandem switching machine may involve many changes in trunking over a wide geographic area, changing the serving or home offices (rehoming) of many customer lines, changing end office relationships in the hierarchy, the consolidation of local areas, and the introduction of new services such as call forwarding or three-way calling. Each of these changes can be evaluated in terms of its effects on overall grade of service.

Other applications of the grade-of-service concept useful in transmission management are the evaluation of alternative solutions for a problem and the establishment of priorities. For example, several transmission deficiencies may exist but resources may be available to implement only one improvement at a time. Grade-of-service calculations may be made to determine which of the alternatives is likely to produce the greatest improvement for the least expenditure. Thus, alternatives are evaluated so that priorities may be assigned on a logical basis.

22-2 THE RESPONSE TO CHANGE

While the solutions to current engineering problems must always be vigorously pursued, the fulfillment of transmission management responsibilities depends equally on a recognition of and a response to the changes that are going on continuously. The interactive nature of changes must also be recognized and taken into account. An example of interaction is seen in intercontinental speech communications where the principle interactive elements have been availability, quality, and cost. The first circuits that linked Europe and North America were provided over short-wave radio facilities during the 1920s. Transmission was relatively poor and unreliable and costs were high. As a result, the service was not popular and demand grew rather slowly. When repeatered submarine cable systems were first installed during the 1950s, demand started to expand rapidly because transmission quality and reliability were greatly improved and costs decreased dramatically. Now, with thousands of submarine cable circuits available in a world-wide network and with satellite circuits a reality, intercontinental communications is growing very rapidly. Quality and reliability are still improving and costs are still declining. Intercontinental transmission of broadband data and video signals is also showing significant increases.

Environmental Changes

Among the important changes now in progress are population growth and movement toward urban areas and the increasing stress on ecological improvements. The effect of the changes in population distribution is being felt in many ways, one of the most important being the reassessment of the organization of the message network. In order to serve the growing urban areas, metropolitan networks are being expanded significantly and there appears to be a concomitant pressure to reduce the number of hierarchical levels in the toll portion of the network. There is an increasing trend toward conversion to out-of-sight plant as a result of ecological concerns. While there are some advantages in terms of reliability and transmission stability, the primary effect of conversion is increased costs.

Another environmental change that has an indirect impact on transmission management is that of the economic climate. During periods of expansion and economic health, there tend to be more funds available for maintenance and transmission improvement programs. During periods of recession and economic stagnation, such funds are

reduced and the challenge of managing network transmission performance increases significantly.

Innovations

Change involves the introduction of new technology, methods, services, and innovative responses to changes in regulatory rules and directions. Transmission management must be responsive to these changes and must influence them in such a manner that performance is improved or at least not degraded.

Technology. Technological changes have marked the entire history of telecommunications. New devices, designs, modes of operation, and media become available continuously and must be controlled and managed as they are introduced in the network.

While the effects of these technological innovations are reduced costs, improved performance, added flexibility, and growth, considerable effort must be expended to assure that new circuits and systems operate compatibly with existing circuits. Fast acting electronic switching systems must operate with slow acting step-by-step systems. New digital transmission systems must interface with the existing analog plant. While room must be made for the new designs, it would be uneconomical to scrap the multibillion-dollar existing facilities. The introduction of new designs must be carefully managed to avoid undue penalities in performance, reliability, service, or cost.

Methods. Maintenance, operations, design, and layout methods must change to keep pace with the rapid changes occurring in the telecommunications field. A most significant change is the transition from manual to automatic methods that has been enabled by the development of digital computers. The changes that are taking place and their impact are very great and they are occurring very rapidly. The factors of size and speed make computer analysis and control attractive. In addition, the network has become so large that the evaluation of the effects of changes would be difficult without computer aids.

Switching operations of the magnitude required in the modern network would probably be impossible to achieve by manual methods. The size of manual switchboards would be impractical and there is probably insufficient personnel available to carry out the necessary operations. There is evidence of similar phenomena occurring in other

fields such as maintenance, design, and layout. Automatic processes and methods are necessarily being introduced increasingly and must be managed carefully.

Services. The demand for new types of services is another dynamic facet of telecommunications that must be satisfied. Such a demand usually arises from developing customer needs but sometimes evolves as a secondary benefit of new technology, i.e., a new service may be made possible by the development of a new system and then sold on its own merits. For example, with the introduction of electronic switching systems, call forwarding, 3-way calling, and abbreviated dialing were introduced and have been well received. Another new service of this type is TOUCH-TONE calling. All of these services have increased in popularity since their introduction and all have introduced challenges to transmission performance management.

The introduction of direct distance dialing (DDD) and its extension to international telecommunications resulted from the needs of the message network which developed with the large expansion of all services after World War II. The largest single example of transmission management was the concurrent development and introduction of the VNL network design plan. This plan made practical the conversion from manual network operation to DDD.

The new DATA-PHONE Digital Service and the Digital Data System were brought into being as a result of a recognition of the need for a more efficient method of transmitting data signals. The potential for growth of this service appears to be very great.

Regulation. Since the telecommunications industry is largely government regulated, it is necessary to maintain flexibility in transmission management in order to respond quickly and affirmatively to changes in regulatory policies. Two recent Federal Communications Commission (FCC) actions illustrate.

First, the FCC permitted the interconnection of specialized common carriers and of customer-provided equipment with telephone company facilities. As a result, transmission management has become more complex because of the appearance in the network of signals other than those originated by the telephone companies. The protection of the network against overload or other impairments that might be caused by signals that exceed amplitude or other specifications is now a major transmission management concern.

Second, the FCC imposed new and more stringent rules on the use of microwave radio protection channels. The number of such channels allowed was significantly reduced. In order to maintain a high level of reliability, it was necessary to develop new protection switching arrangements.

Planning

Current and fundamental planning programs provide mechanisms for controlling and managing transmission. The installation of new systems, the application of new technology, and the initiation of new services require careful planning to avoid the deterioration of overall performance.

New methods are being applied to planning activities just as they are to other functions. As in other applications of new methods, the digital computer and allied uses of telemetry systems play an important role in providing adequate planning procedures [2].

Education and Training

With changes taking place so rapidly, it is essential that personnel involved in the engineering of the network and in transmission management be given adequate opportunity for meaningful continuing education. Many centers of education and training are conducted by operating companies throughout the Bell System. Foremost among these is the Bell System Center for Technical Education located in Lisle, Illinois [3]. This center conducts a dynamic educational program covering all the technology involved in operating and managing the telecommunications network. The staff of managers, developers, instructors, and technologists are selected from the Bell System and serve at the center for periods of two to three years.

REFERENCES

1. American Telephone and Telegraph Company. *Telecommunications Transmission Engineering,* Volume 1, Second Edition (Winston-Salem, N. C.: Western Electric Company, Inc., 1977), Chapter 24.

2. Machol, R. E. "Acquiring Data for Network Planning and Control," *Bell Laboratories Record,* Vol. 52 (Oct. 1974), pp. 279-285.

3. Sener, C. J. and R. A. Kotch. "The Bell System Center for Technical Education: One Industry's University," *IEEE Transactions on Education,* Vol. E-15, No. 2 (May 1972), pp. 103-108.

INDEX