HEWLETT PACKARD

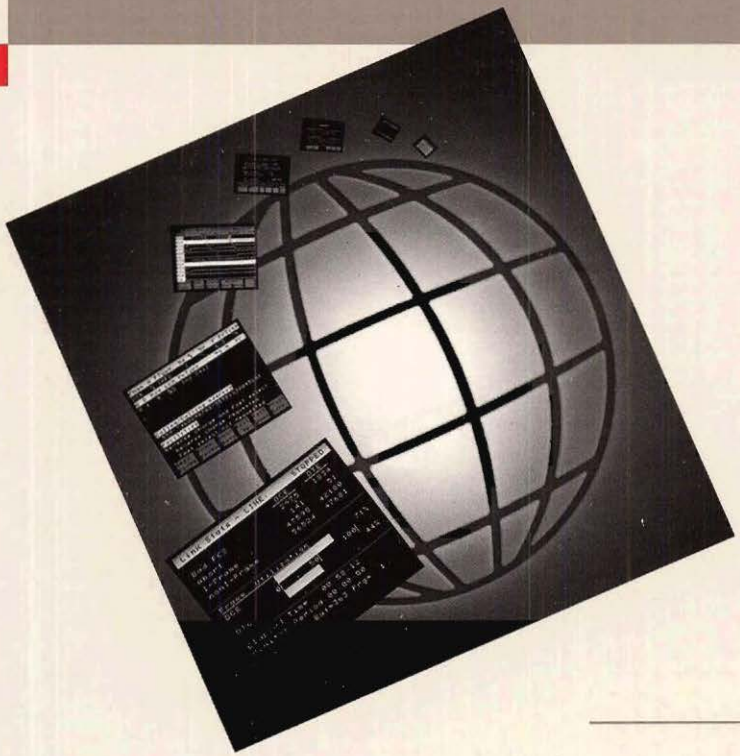

HP 18267A X.25 Test Library and Emulator

for the HP 4952A Protocol Analyzer

User's Guide

HP 4952A Protocol Analyzer

HP 18267A
X.25 Test Library and Emulator

User's Guide

Manual Part Number: 18267-99502
Microfiche Part Number: 18267-98802

Printed in U.S.A. JANUARY 1989

Notice

Hewlett-Packard makes no warranty of any kind with regard to this material, including, but not limited to, the implied warranties of merchantability and fitness for a particular purpose. Hewlett-Packard shall not be liable for errors contained herein or for incidental or consequential damages in connection with the furnishing, performance, or use of this material.

Hewlett-Packard assumes no responsibility for the use or reliability of its software on equipment that is not furnished by Hewlett-Packard.

If your software application or hardware should fail, contact your local Hewlett-Packard Sales Office listed in the protocol analyzer operating manual.

Colorado Telecommunications Division
5070 Centennial Boulevard
Colorado Springs, CO, 80919-2497

Contents

Chapter 4 - Using the Emulator to Create a Test

Chapter 5 - Procedure for Installing and Troubleshooting X.25 Equipment and Networks

Chapter 6 - X.25 Test Library Emulate Menu Listings

Illustrations

Printing History

New editions are complete revisions of the manual. Update packages (formerly known as "Manual Changes") are issued between editions. They contain additional and replacement pages to be merged into the manual by the customer. The dates on the title page change only when a new edition or a new update is published. No information is incorporated into a reprinting unless it appears as a prior update. The edition does not change when an update is incorporated.

Many product updates and fixes do not require manual changes and, conversely, manual corrections may be done without accompanying product changes. Therefore, do not expect a one-to-one correlation between product updates and manual updates.

Edition 2 ..... January 1989

Syntax Conventions

The following symbols, abbreviations, and other conventions are used in this publication.

Symbol	Definition
<Setup Menu>	A softkey.
[RESET]	A keyboard entry
[CNTL] character	A control character entry from the keyboard where *both* the **[CNTL]** (control) key and an alphanumeric key are pressed at the same time. To enter **[CNTL] U** press the control and the U character key.
[SHIFT] <Softkey>	A keyboard entry where *both* the **[SHIFT]** and a softkey are pressed at the same time to select an *auxiliary* softkey function.
BSC	Within menus or screens, a parameter that must be entered in the exact format shown.
filename	Within menus or screens, a user-defined parameter.
`Message`	Error message or analyzer text display.
WARNING	An operating procedure, practice, etc., which, *if not correctly followed*, could result in personal injury or loss of life.
CAUTION	An operating procedure, practice, etc. which, *if not strictly observed*, could result in damage to, or destruction of, equipment or software.
NOTE	Explanatory comments or supplementary instructions are preceded by a *Note* label.

1

Introduction

Description

The HP 18267A X.25 Test Library and Emulator makes X.25 troubleshooting, especially at installation, easier.

The enhancements to the standard HP 4952A Protocol Analyzer made by this application are:

- Automatic lead driving for Level 1 (full duplex only).
- Extended Control support for X.25 Level 2.
- Complete Level 2 emulation.
- Partial Level 3 emulation.
- An installation procedure.
- Prewritten, ready to use X.25 tests.

Applications

This product can be used where X.25 data travels over an LAPB link using RS-232C/V.24, RS-449, V.35, X.21, or Mil-188C as a physical interface.

To use the HP 18267A X.25 Test Library and Emulator in an efficient way:

Use the prewritten tests of the Test Library and installation procedure in Chapter 5 to help during installation of X.25 equipment.

Modify the prewritten tests for installation testing.

Use the prewritten tests as examples to write custom tests for troubleshooting X.25 networks and equipment during installation, maintenance, or design.

How to Use This Manual

If you are a novice X.25 user, start from the beginning and read through each chapter in order. If you are familiar with X.25, look at the description of the Setup Menus (Chapter 3), and Creating a Test (Chapter 4) for a hands-on demonstration of the capabilities. Chapter 5 contains an installation procedure. Chapter 6 contains listings of the X.25 Test Library contained on the HP 18267A master disc.

If you would like an overview of what is contained in each chapter, refer to the Table of Contents which describes the objectives and major headings for each chapter. The chapters are arranged in order of increasing difficulty, with each chapter building on the concepts introduced in the preceding one.

This manual describes the features of the HP 18267A X.25 Test Library and Emulator with minimal references to HP 4952A protocol analyzer operation. If you would like to review the basic HP 4952A functions and features, refer to the HP 4952A Operating Manual.

Equipment Supplied

The HP 18267A X.25 Test Library and Emulator package includes the following:

Master Disc Blank Disc User's Guide

The HP 18267A master disc contains the X.25 Level 2 Emulator, and a X.25 Test Library of prewritten tests.

The User's Guide provides training and reference information.

2

Loading the Test Library and Emulator

Introduction

This chapter describes how to load the X.25 Level 2 Emulator and tests into the HP 4952A Protocol Analyzer. Only one test can be loaded at a time.

For detailed information concerning voltage and grounding requirements, power cords, and instrument operation, refer to the HP 4952A Protocol Analyzer Operating Manual.

CAUTION

Always turn OFF the Protocol Analyzer before connecting or disconnecting an Interface Pod.

Connect an Interface Pod

Make certain that the Protocol Analyzer is turned OFF.

Connect the Interface Pod cable to the connector on the back panel of the Protocol Analyzer.

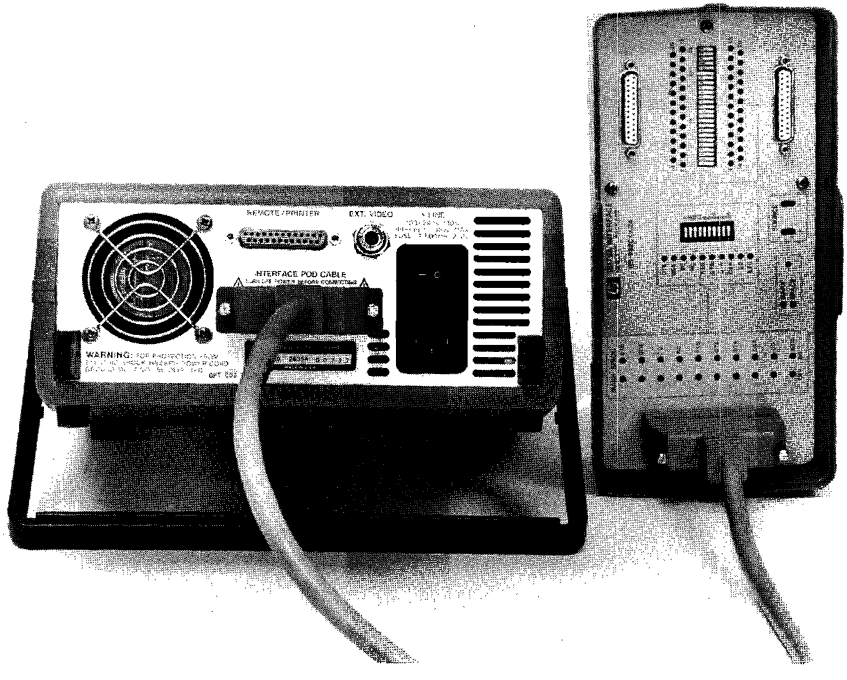

Figure 2-1. Connect an Interface Pod

Turn ON the Protocol Analyzer

Press the line switch to "1" on the back panel to turn ON the HP 4952A Protocol Analyzer. The Protocol Analyzer begins an automatic self test sequence. After the tests are completed, the top level menu is displayed.

If errors have been detected during the test, a list of errors is displayed. You can get to the top level menu from the error display by pressing **[EXIT]**. In this case, however, proper operation cannot be assumed; contact your Hewlett-Packard Sales and Service Office for assistance.

The top level menu is very important because it gives you access to all of the features of the Protocol Analyzer.

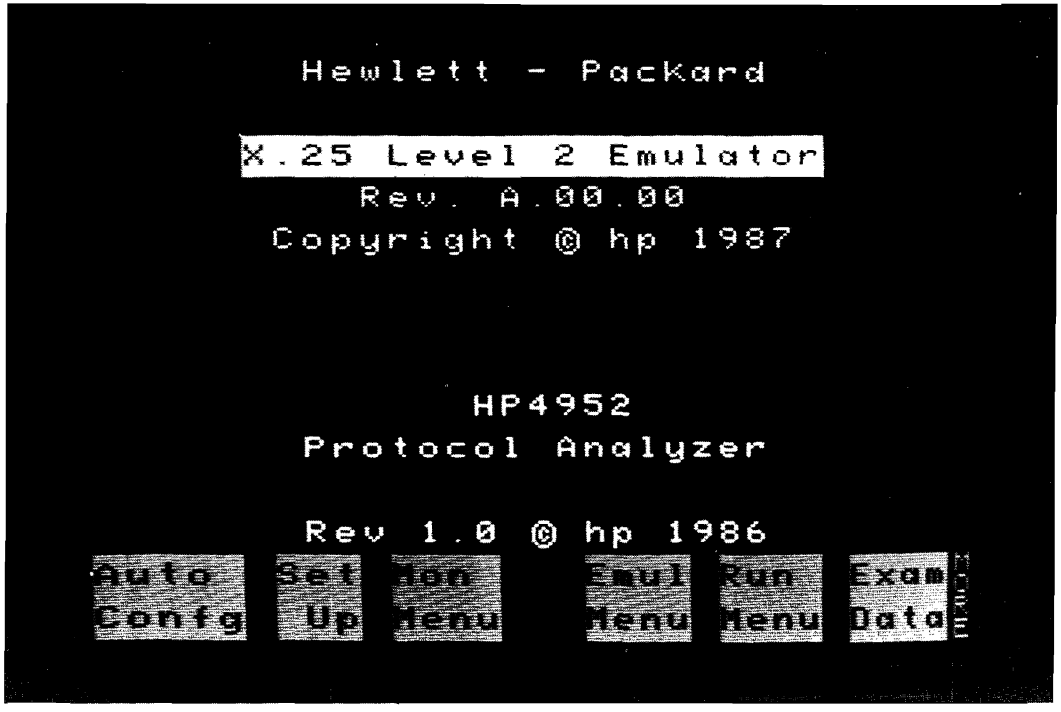

Figure 2-2. Top Level Menu

After the application is loaded, the top level display will change as shown above in figure 2-2.

Make a Working Copy of the Master Disc

Hewlett-Packard recommends that you make a working copy of the master disc. Use the working copy for day-to-day use and retain the master as a backup in case your working copy of the disc fails due to wear or accidental erasure.

Copying an application program for any reason other than your own use violates copyright laws.

The HP 18267A Test Library and Emulator package includes a master disc and a blank disc. The blank disc is provided so you can make a working copy of the master disc. If you are not familiar with the basic features of the Protocol Analyzer, you should consult the HP 4952A Protocol Analyzer Operating Manual for the necessary procedures.

Loading the X.25 Level 2 Emulator and Tests

The X.25 Level 2 Emulator cannot be used concurrently with other applications.

Load the HP 18267A disc into the HP 4952A Protocol Analyzer.

Loading the X.25 Level 2 Emulator

1. From the top level menu, press **[MORE]**, then **<Mass Store>**.

```
Function: Directory MSD = Disc
Name            Type            Sectors
DCE_LCN1        Ext Menu          37
DCE_LCN2        Ext Menu          37
DCE_WINDOW      Ext Menu          37
DCE_CALL_M      Ext Menu          37
DCE_CALL_1      Ext Menu          37
DCE_FRAME       Ext Menu          37
DCE_FACIL       Ext Menu          37
MON_TEST        Ext Menu          37
X25_EMULAT      Applic Prog       89
X.25 LVL 2 EMULATOR -REV.A.00.00
Space Available 1964 Sectors

MSD=  Dir  Load  Store  Del-  Re-
 RAM                     ete  cover
```

Figure 2-3. Selecting the X.25 Level 2 Emulator

2. Move the cursor over the file **X25_EMULAT**, and press **<Load>**.

3. Press **<Execute>** and the X.25 Level 2 Emulator will be loaded.

Loading a Test from the Test Library

1. From the top level menu, press **[MORE]**, then **<Mass Store>**.

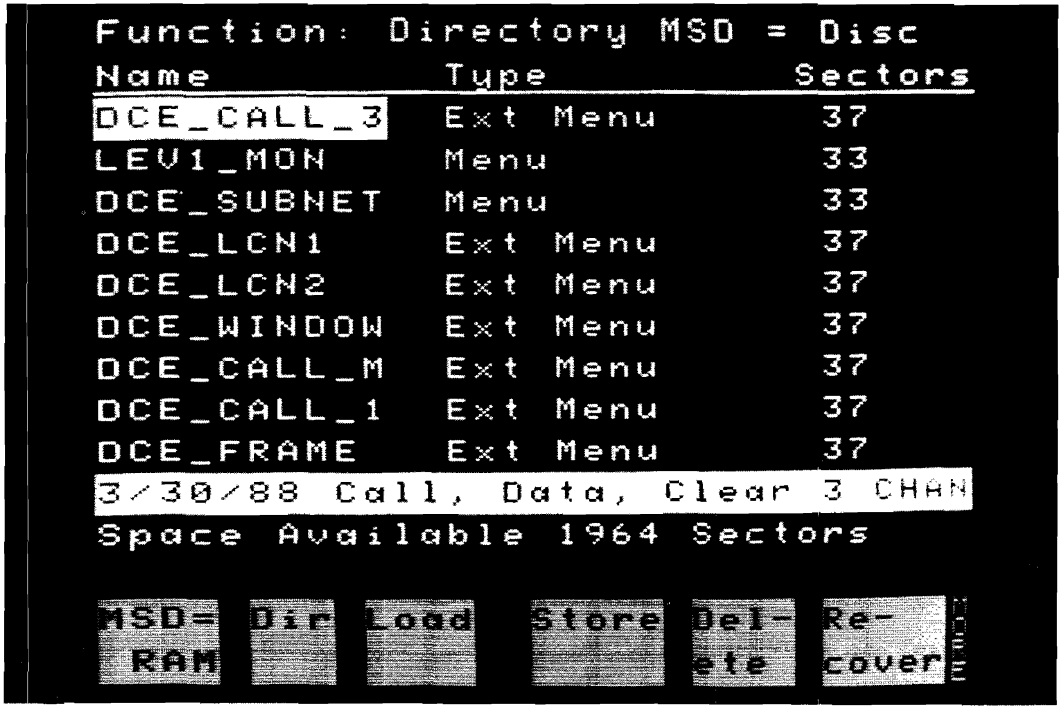

Figure 2-4. Selecting a Test From the Test Library

2. Move the cursor over the test of your choice, and press **<Load>**. See Chapter 6 for file names of the tests and their descriptions.

3. Press **<Execute>** and the test will be loaded into the Emulation menu.

3

Getting Started - X.25 Setup Menus

This chapter explains the X.25 setup menus and display features. The following descriptions and displays assume that the X.25 Level 2 Emulator is loaded.

From the top level menu, press **<Setup>** to access the X.25 Setup menu. See figure 3-1.

```
X.25 Setup Menu

Lev 1 Setup  Set Lev 1 Parameters
  (Data code, Bits/sec, Err Ck)
Lev 2 Setup  Set Lev 2 Parameters
  (N1, N2, T1, K, Dev Emulating)
Lev 3 Setup  Invoke various
  Level 3 automatic features
Call Setup   Addresses for Call
  Packet auto address insertion
Disp Def     Define up to 5
  X.25 display formats

Rev 1.0 © hp 1986
Lev 1 Setup | Lev 2 Setup | Lev 3 Setup | Call Setup | Disp Def
```

Figure 3-1. X.25 Setup Menu

If you haven't loaded the X.25 Level 2 Emulator, follow the instructions in Chapter 2. When the X.25 Level 2 Emulator is loaded, it replaces the top level menu softkey **<Sim Menu>** with **<Emul Menu>**. The **<Emul Menu>** softkey lets you create and edit X.25 emulation menus which are similar to simulate menus.

Setup Menus Overview

When you load the X.25 Level 2 Emulator application, five setup menus are provided. The first four represent different levels of X.25 control, and the fifth determines how the data will be displayed in the Examine Data menu, or during run time. In order to correctly emulate part of an X.25 Network, the different X.25 parameters must be chosen correctly.

Every time you save an Emulate menu, the current Setup parameters will be saved with that test.

Level 1 Setup Menu

The Level 1 Setup menu can be reached by pressing the **<Setup>** menu key from the top level menu, then pressing **<Lev 1 Setup>**. When you load the Emulator, the analyzer is automatically set up for X.25 protocol. The default speed, data code, and other parameters are the most common used. See figure 3-2.

In order to use the HP 4952A with other protocols, the X.25 Level 2 Emulator application must be deleted.

Auto Configure can be used to determine the Level 1 Setup parameters of an X.25 line with data flowing.

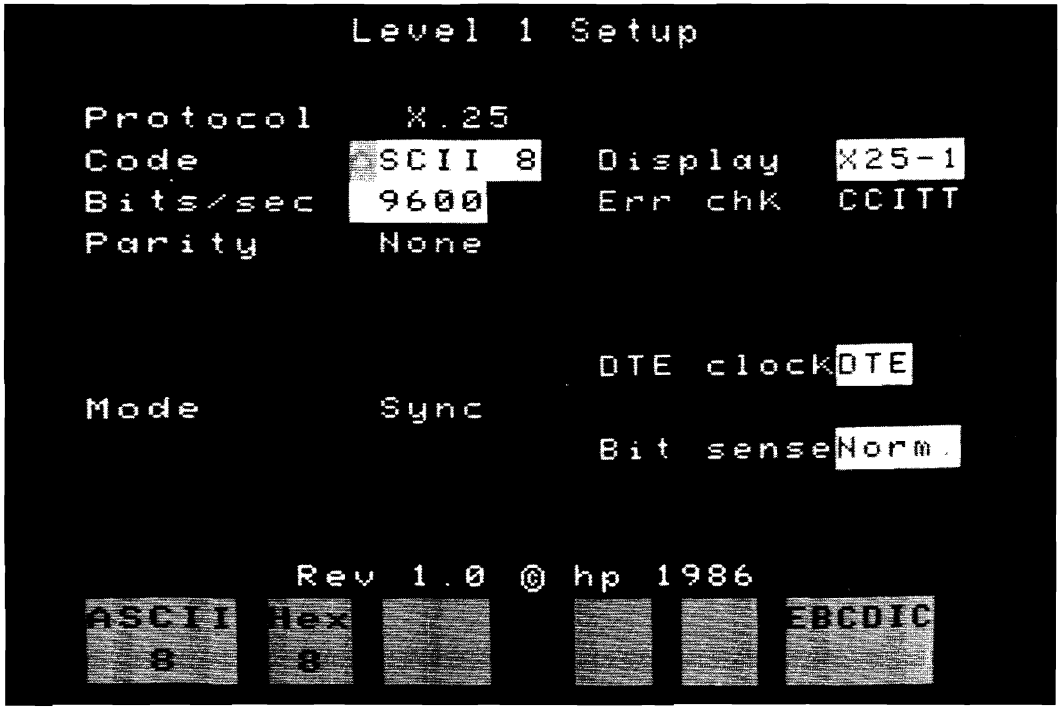

Figure 3-2. X.25 Emulator Level 1 Setup Menu

Level 2 Setup Menu

From the top level menu press **<Setup>**, then press **<Lev 2 Setup>**. The protocol analyzer's display changes as shown in Figure 3-3. The X.25 Level 2 parameters are discussed on the next page.

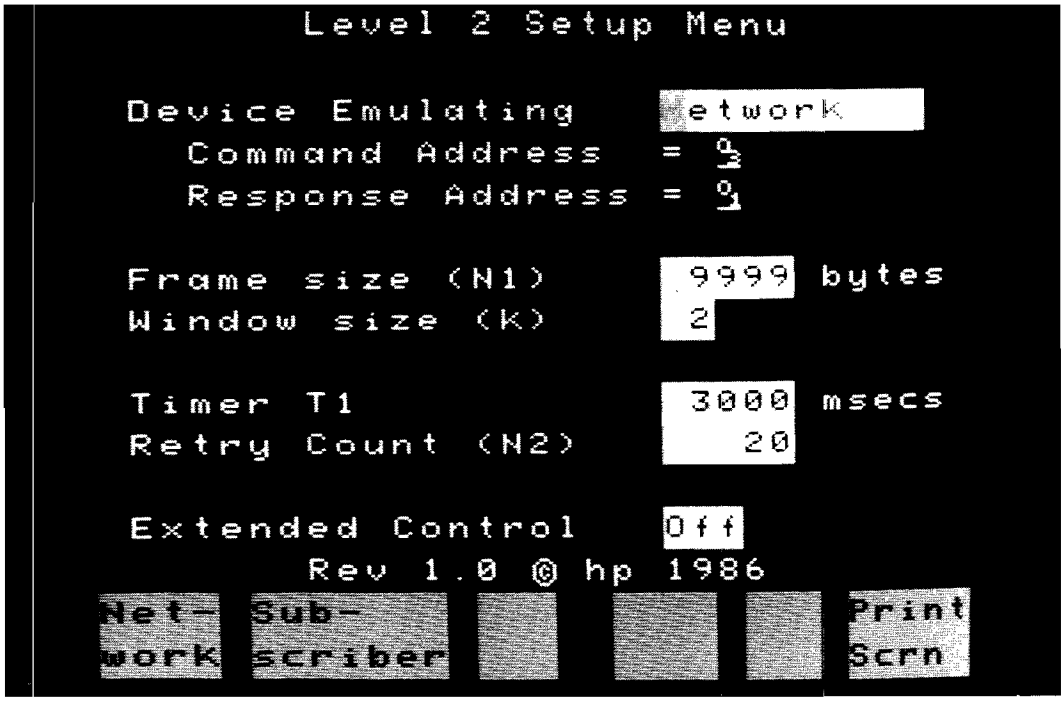

Figure 3-3. X.25 Emulator Level 2 Setup Menu

The Level 2 Setup Menu is used to modify LAPB Data Link Control parameters that can affect the operation of Emulation menus. The Level 2 parameters are listed below:

Device Emulating — Determines whether the HP 4952A is emulating the network or subscriber. The Address field will change from Command Address 03 Hex and Response Address 01 HEX, to 01 and 03 HEX respectively.

Frame Size (N1) — Defaults to 9999 bytes. During run time no received information frame (I-Frame) can be larger than the set value in the Frame Size. If an information frame is received that is longer than this set value, the emulator will issue a frame reject command. Frames transmitted by the HP 4952A may be any length up to 253 bytes including the FCS bytes.

Window Size (k)	Determines the number of frames that can be sent from the HP 4952A before an acknowledgement must be received. The default window size is 2. Other common sizes are 1, and 3 to 7.
Timer T1	T1 timer value is the length of time allowed between the transmission of a frame and the acknowledgment of that frame by the receiver. The default is 3000 milliseconds.
Retry Count (N2)	The retry count determines how many times a frame will be transmitted from the HP 4952A without an acknowledgement requested. If the Retry Count is exceeded, then the link is brought down. The default Retry Count is 20.
Extended Control	Determines whether the control field of a frame is one or two bytes long, and whether the N(S) and N(R) values will be Modulo 8 or Modulo 128. The default is Off which indicates Modulo 8

Level 3 Setup Menu

The Level 3 Setup menu is reached from the top level menu by pressing **<Setup>**, then **<Lev 3 Setup>**. See figure 3-4. The Level 3 Setup choices are described on the next page.

```
                Level 3 Setup Menu

Virtual Call LCNs          1  -  255

Auto P(s), P(r)                      On
  Auto Level 3 RRs                   On
Auto Restart Cnf                     On
Auto Call Acc/Con, Clr Cnf           On

Auto Address Insertion
  from Call Setup Menu               On
Auto LCN Using Counter 5             On

              Rev 1.0 © hp 1986
```

Figure 3-4. X.25 Emulator Level 3 Setup Menu

The X.25 Level 2 Emulator is a partial Level 3 emulator. In order to perform many of the automatic Level 3 functions, the emulator keeps track of the call activity on up to eight logical channels at any one time.

The Level 3 Setup menu supplies many automatic level 3 features. These features may be selected On or Off in the Level 3 Setup menu. These include:

Virtual Call LCNs determines the incoming call LCN range accepted by the emulator.

Auto P(s), P(r) for up to 8 logical channels.

Auto level 3 RR transmission on receipt of a Data packet.

Auto Restart Confirmation transmission on receipt of a Restart Request packet.

Auto Call Accept/Call Confirmation, and Auto Clear Confirmation transmission on receipt of a Call Request/Incoming Call packet and a Clear Request packet respectively.

Auto Address Insertion into Call Request/Incoming Call packets.

Auto LCN Using Counter 5 inserts the value of counter 5 into the LCN field of all outgoing packets except Restart packets.

Virtual Call LCNs

The Virtual Call LCN field determines the LCN range of incoming calls that will be accepted.

The emulator automatically keeps track of the call activity on up to 8 logical channels at any one time. The numbers of the logical channels are determined in real time based on Call Request/Incoming Call packets, Clear Request/Clear Indication packets, Restart Request/Restart Request packets, and Data packets on LCNs which have not previously had a Call Request/Incoming Call. Data packets falling into the last category are assumed to be on Permanent Virtual Circuits and one of the available logical channels will be allocated to that channel number until a Restart Request/Restart Indication packet is detected on the line (either transmitted or received).

Auto P(s), P(r)

The emulator automatically keeps track of the P(s) and P(r) counts for the first 8 LCNs that become active after the emulator is started (either Permanent Virtual Circuits PVCs or Switched Virtual Circuits SVCs). If 8 LCNs are currently being used, and additional call requests are transmitted or received, the emulator will not keep track of the P(s) and P(r) counts for those additional logical channels.

When a packet is transmitted that has a P(s) or P(r) field, the emulator automatically inserts the correct value based on the LCN for those fields overriding the send string values.

Auto Level 3 RR Transmission

If this option is selected, an RR packet will be transmitted automatically when a Data packet is received. The P(r) count will be the P(s) count for incoming packets plus one.

Auto Restart Confirmation Transmission

When a Restart Request/Restart Indication packet is received by the emulator, a Restart Confirmation packet is automatically transmitted on LCN 0. The P(s) and P(r) counts for the 8 logical channels that can be followed are set to 0.

Auto Call Accept/Call Confirmation and Clear Confirmation Transmission

When a Call Request or Incoming Call packet is received by the emulator, a Call Accept/Call Confirmation packet is automatically transmitted on the same LCN. This will occur if the requested LCN has not already been allocated, and if the requested LCN is within the range specified in the Virtual Call LCNs field of the Level 3 Setup menu. If the call is successful, the emulator will begin to follow the P(s) and P(r) counts for that channel until a clear is received for that channel or until a Restart Confirmation packet is detected on the line.

If the LCN has already been allocated or the LCN is not within the specified range, a Clear Request/Clear Indication packet is automatically transmitted with 0_0 0_0 as the cause and diagnostic codes.

When a Clear Request/Clear Indication packet is received by the emulator, a Clear Confirmation packet is automatically transmitted on the same LCN. The User Data field of the packet is left empty. The emulator will also stop following the P(s) and P(r) counts for that channel.

Auto Address Insertion from Call Setup Menu

Call Request/Incoming Call packets transmitted by the emulator will have their Calling and Called address fields automatically entered on transmission using information which has been entered into the Call Setup menu. You can define the called and calling addresses for up to six calls in the Call Setup menu. The first call to be initiated by the emulator will go to the address defined for the first call, the second call to the address defined for the second call, the seventh call to the address defined for the first call, the eighth call to the address defined for the second call, etc. Refer to the Call Setup menu description for more information.

Auto LCN Using Counter 5

For all outgoing packets the emulator will automatically insert the counter 5 value into the LCN field except for the following three exceptions:

1. All Restart packets will have LCN = 0 regardless of the value of counter 5.

2. All automatic response packets such as Call Connect, RR, will use the LCN of the packet they are responding to.

3. If the LCN field of the send string is not zero, the packet will use the LCN inserted into the send string

In order to preset counter 5 to a known value such as 1, use the following Emulate menu commands:

Reset Counter 5
Increment Counter 5 by 1

The Reset Counter 5 command resets Counter 5 to 0. The Increment Counter 5 by 1 command sets Counter 5 to 1. The first LCN inserted will be 1. The next will be 2, etc.

Counter 5 can be decremented by adding 65535 to it. The following example describes how to this works:

Assuming the current value of counter 5 is 250

Increment Counter 5 by 65535

The next LCN used would be 249 due to the following reason:

The value 65535 is FFFF Hexadecimal. By adding FFFF to 00FA (250 decimal) the result will be:

	1111 1111 1111 1111	=	FFFF Hex	=	65535 Dec
+	0000 0000 1111 1010	=	00FA Hex	=	250 Dec
=	0000 0000 1111 1001	=	00F9 Hex	=	249 Dec

Call Setup Menu

The Call Setup menu lets you enter up to six calling and Called address combinations which will be automatically inserted into Call Request/Incoming Call packets transmitted by the emulator if auto address insertion has been selected in the Level 3 Setup menu. Assuming that called addresses have been specified for each of the six calls, the first call packet will go to the first call address specified, the second to the second address, etc. The seventh call will go to the first address, the eighth to the second address, etc.

If any of the called addresses are not specified, the next called address in the list will be used continuing the rotation. If only one called address is specified, all outgoing calls will be sent to that one address. If no called addresses are specified, all call packets will be sent out with the address length field indicating 0 and no address bytes.

that one address. If no called addresses are specified, all call packets will be sent out with the address length field indicating 0 and no address bytes.

No "dummy" characters need be entered into the Emulate menu "Send" string for either the address length or the addresses themselves. Any Facility field information should be entered immediately after the Packet Type Identifier field in the "Send" string.

Display Definition Setup Menu

The **<Disp Def>** Setup menu option lets you define up to five different custom display formats. Five predefined display formats are loaded with the X.25 Level 2 Emulator.

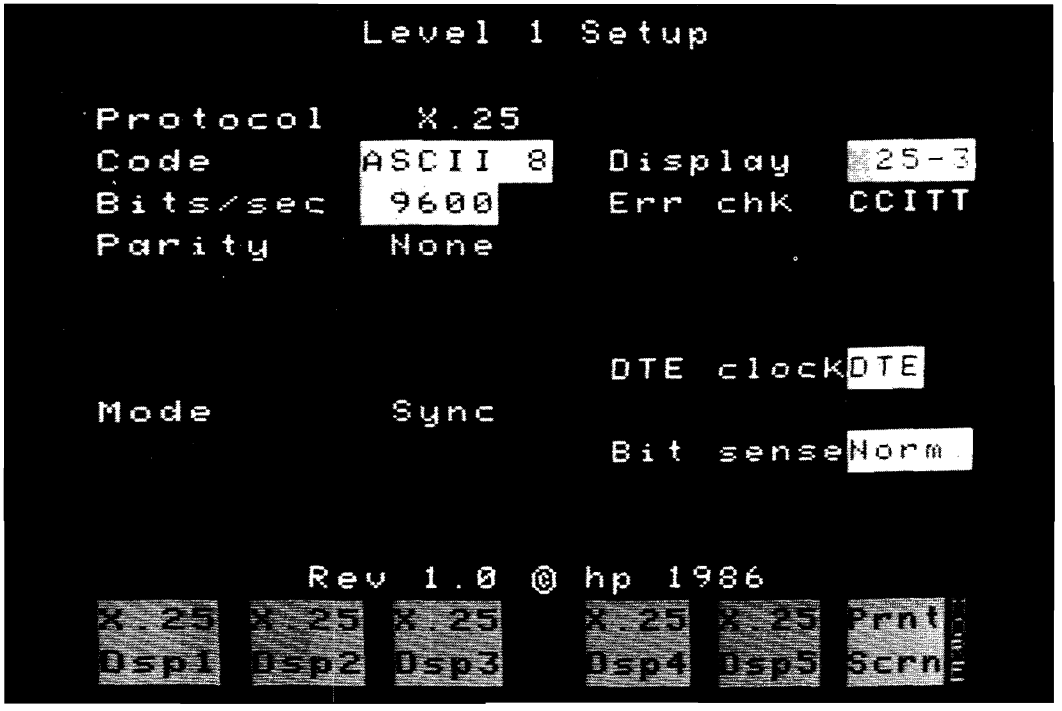

Figure 3-5. Display 3 Selected in Level 1 Setup Menu

Once defined, the X.25 user defined displays are selected in the Level 1 Setup menu's Display field, or in the Examine Data menu. See figure 3-5 for an example.

Setting Up X.25 User Definable Displays

The X.25 user definable display menu lets you define the X.25 display format, and to define where the subscriber is connected to the network (physical DTE or the physical DCE).

To define an X.25 display perform the following:

1. Press the **<Set Up>** key in the Top Level Menu.

2. Press the **<Disp Def>** key to access the X.25 Display Definition Menu shown in figure 3-6.

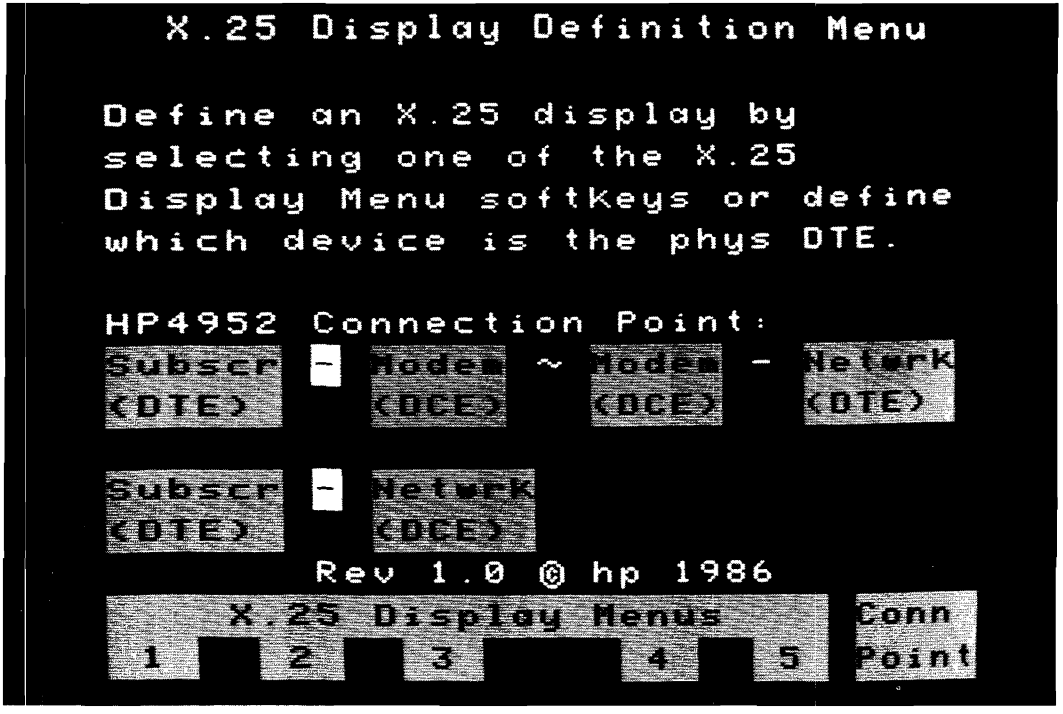

Figure 3-6. X.25 Display Definition Menu

3. Select the X.25 Display Menu (one through five) that you wish to define or modify.

4. Define the user definable display Column, Header, and Data Field parameters as follows:

a. Select either a one or two Column display format. See figure 3-7.

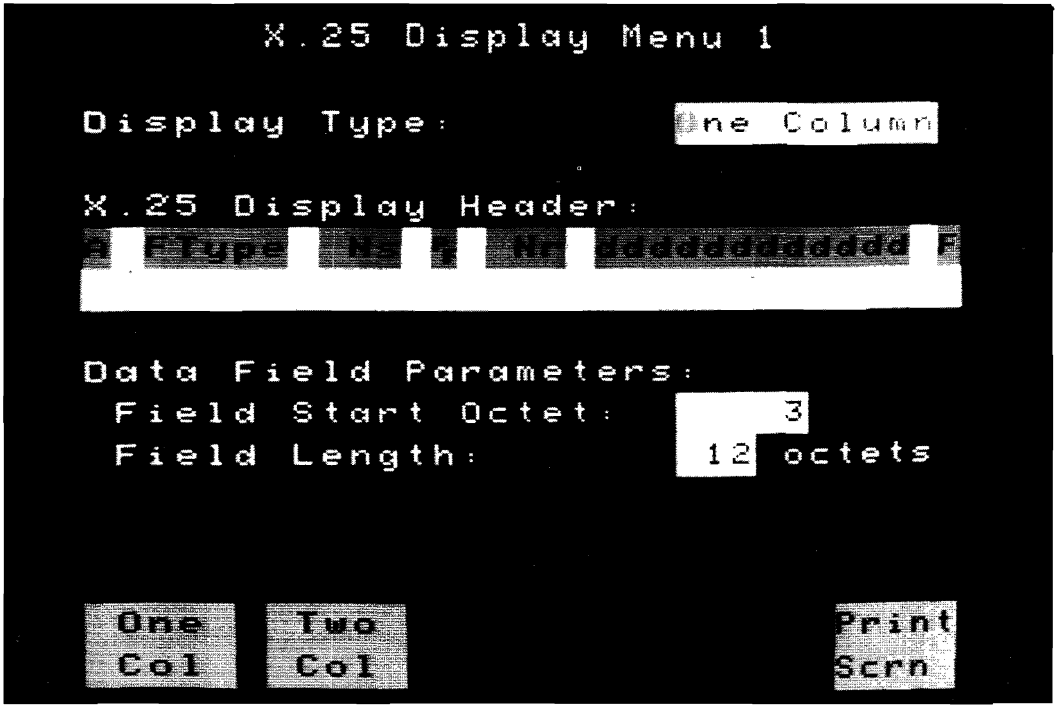

Figure 3-7. One or Two Column Menu

In one column format, subscriber information is displayed in normal video, and network information is displayed in inverse video.

In two column format, subscriber information is displayed in the left half of the display, and network information is displayed in the right half of the display.

The one column format can contain up to 32 characters per line. The two column format can contain up to 15 characters per line. Each field, i.e., Addr, Ns, P/F etc., takes up a certain amount of header space.

The amount of header space occupied by each field is given in the "X.25 Display Header Selection" section in this chapter. A field which ends after the header line will cause the error message "Field extends past header line" to appear.

When using the two column display, all fields entered will appear in both header blocks.

b. Define the header information. See figure 3-8. Use softkeys to select fields for header definition. Fields are displayed in half bright video in the header block at cursor position. Spaces between fields must be entered by you (use arrow key) if you desire them. Fields can not extend past end of line. You may overwrite a field by placing the cursor over that field and selecting another field.

The entire header can be cleared using the Clear Header softkey. The fields can be deleted by using the Delete Field softkey. See figure 3-8 for a complete list of the header fields and information.

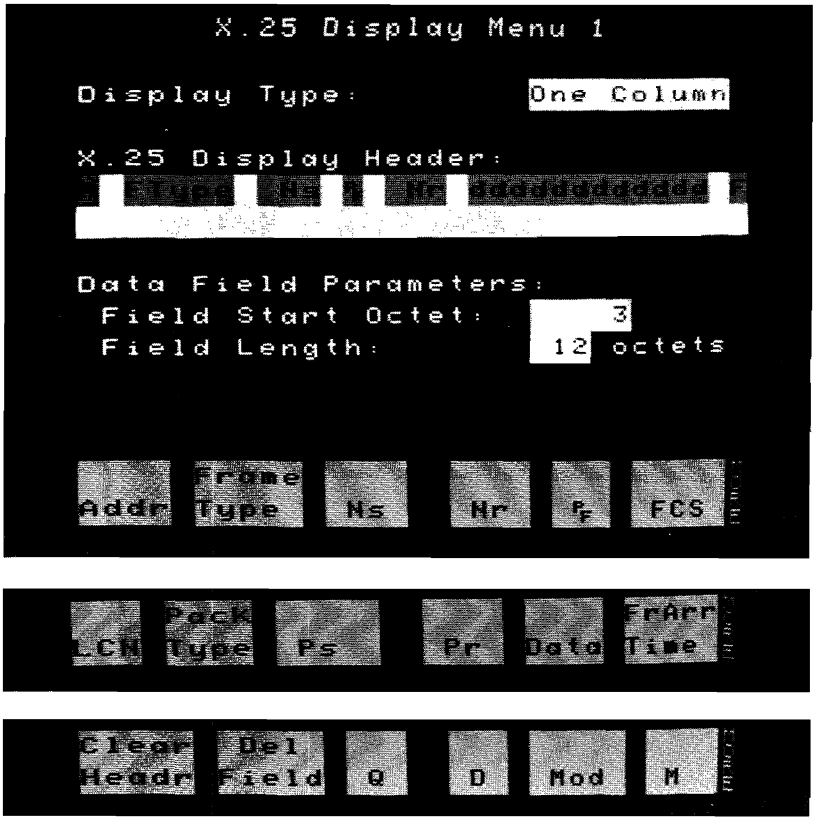

Figure 3-8. X.25 Display Header Selections

The X.25 header selections are described in the section "X.25 Display Header Selection" on the next page.

c. Define the Data Field Parameters. Not necessary if data is not specified in header. These parameters enable you to define where in a packet the data field will start, and how long it will be.

The "Field Start Octet" field lets you define on which octet to start the display. The "Field Length" field lets you specify how many octets (from the starting octet) that you want to display.

d. Press the [EXIT] key when you are finished.

X.25 Display Header Selection

The following table gives the amount of field space consumed in the header definition:

Field Name	Abbreviation	Space used
Frame Address	A	1
Frame Type	FType	5
Ns	Ns	3
Nr	Nr	3
P/F	PF	1
FCS	F	1
LCN	LCN	3
Packet Type	PkType	9
Ps	Ps	3
Pr	Pr	3
Data	dd...d	up to 32
Frame Arrival Time	FrTime	6
Q	Q	1
D	D	1
Mod	Mod	3
M	M	1

Frame Address (A)

The frame address (A) is displayed as a hex character.

Frame Type (FType)

All of the frame types are decoded and their 5 character abbreviations are as follows:

Frame Type	Abbreviation
Information	INFO
Receive Ready	RR
Receive Not Ready	RNR
Reject	REJ
Set Asynchronous Balanced Mode	SABM
Set Async Balanced Mode Extended	SABME
Disconnect	DISC
Disconnected Mode	DM
Unnumbered Acknowledgement	UA
Frame Reject	FRMR

Ns and Nr

Ns and Nr require three display spaces each regardless of whether extended control is selected.

P/F (PF)

This field is a 1 when the P/F bit is set, and a blank when the P/F bit is not set.

FCS (F)

The FCS is displayed as "G" for good, "B" for bad and "A" for abort. The "B" and "A" blink to indicate an error.

LCN

LCN includes both the LCGN and the LCN. It is displayed as a hexadecimal number.

Packet Type (PkType)

All of the packet types are decoded and their 9 character abbreviations are as follows:

Packet Type	Abbreviation
Incoming Call	Inc Call
Call Request	Call Req
Call Connected	Call Con
Call Accepted	Call Acc
Clear Indication	Clr Ind
Clear Request	Clr Req
Clear Confirmation	Clr Conf
DTE Clear Confirmation	Clr Conf
DCE Data	Data
DTE Data	Data
DCE Interrupt	DCE Int
DTE Interrupt	DTE Int
DCE Interrupt Confirmation	Int Conf
DTE Interrupt Confirmation	Int Conf
DCE RR	RR
DTE RR	RR
DCE RNR	RNR
DTE RNR	RNR
DTE REJ	REJ
Reset Indication	Reset Ind
Reset Request	Reset Req
DCE Reset Confirmation	Reset Con
DTE Reset Confirmation	Reset Con
Restart Indication	Restart I
Restart Request	Restart R
DCE Restart Confirmation	Restart C
DTE Restart Confirmation	Restart C
Diagnostic	Diag
Registration Confirmation	Reg Conf
Registration Request	Reg Req

Ps and Pr

Ps and Pr require three display spaces each regardless of whether the packet specifies mod 8 or mod 128.

Data (dd...d)

Data is a generic field which you define. You can define the field to be any length up to 32 characters in a one column display or up to 15 characters in a two column display. You must also specify the frame octet with which the field is to begin. The data field can be displayed in either the data code selected in the setup menu or in hex.

This field allows you to display as much of the data in a data packet as desired up to the limit. It is also possible to display decoded data and undecoded data at the same time. For example, assume that the data field has been setup to be 1 octet long and to start at frame octet 5 (Packet Type Identifier field), and the packet type has been selected to be displayed.

The Data field decode will show the Packet Type Identifier in an undecoded format, and the Packet Type Identifier field will show the same information decoded to indicate the packet type as a mnemonic.

Frame Arrival Time (FrTime)

The frame arrival time is displayed ONLY during Examine Data. It is measured from the start of the run to the frame's end flag. The time is displayed as a 6 digit number in milliseconds and is accurate to 1 millisecond.

Frame Arrival Time Overflow. An overflow occurs after 99999 milliseconds. If an overflow occurs, the result will be followed by an * . If a second overflow occurs, the * is no longer displayed.

Q, D and M

These fields are simply displayed as a 1 or a 0.

Mod

Modulo is displayed as either "8", "128", or Undefined (Und).

Defining the HP 4952A Connection Point

You can tell where the analyzer is connected to the network when capturing data, or where the analyzer was connected to the network when the buffer data was captured. If the proper connection point is indicated, the analyzer will decode information in the X.25 user definable display formats as follows:

For one column display formats:

Data from Subscriber is in normal video.
Data from the Network is in inverse video.

For two column display formats:

Data from Subscriber is in normal video (left side of display).
Data from Network is in inverse video (right side of display).

In addition, X.25 packets will be decoded into their proper mnemonics based on where the packet originated. For example, a packet with a Packet Type Identifier of 0B HEX will be decoded as a Call Request packet if the packet was sent by the Subscriber, or as an Incoming Call packet if the packet was sent by the Network.

The X.25 Display Definition menu as shown in figure 3-6, is a simplified diagram of two common type of Subscriber connections to an X.25 Network. The inverse video square(s) in each indicate where in the Network the HP 4952A is connected.

In figure 3-6, The analyzer may be connected either between the Subscriber and the first Modem, or between the second Modem and the Network.

To indicate the proper connection point, move the connection point indicator to the desired location using the **<Conn Point>** key. The connection point is toggled between the two possible connection points each time the **<Conn Point>** key is pressed.

Selecting a User Definable Display

The steps required to access the user definable displays are as follows:

1. Select **<Set Up>** in the main level menu, then press **<Lev 1 Setup>**.
2. Move the cursor into the Display field. The Display field softkeys will appear.
3. Select the X.25 display (one through five) that you wish to use.
4. Press **[EXIT]** twice to return to the top level menu.

or

1. Select **<Examine Data>** in the main menu.
2. Press **[MORE]** twice, then **<Chang Dsply>**.
3. Select the X.25 display (one through five) that you wish to use. After selecting the X.25 user-definable display you wish use, the display returns to the Examine Data menu with the cursor at the same frame.

4

Using the Emulator to Create a Test

This chapter explains how to setup the HP 4952A and create a test using the X.25 Level 2 Emulator. An example test is given and explained line by line. It is important to understand that you do not need to write your own tests. The example used in this chapter is similar to one of the Test Library Tests. The purpose of this chapter is to show how to write a test.

Here is the order in which this chapter is presented:

- Emulate menu
  - Level 1 Emulation (Special Considerations)
  - Level 2 Emulation (The Set Lead Command)
  - Level 3 Emulation (The Send Statement)
  - Executing the Emulate Menu
- Setting Up the Emulator
  - Configuring the Level 1 Setup Menu
  - Configuring the Level 2 Setup Menu
  - Configuring the Level 3 Setup Menu
  - Setup the Call Setup Menu
  - Selecting a Predefined Display Format
- Writing the Test

Given the following situation, an example test is written in the emulate menu to test X.25 equipment..

> An HP 2334 PAD with an asynchronous terminal connected to port 3 is being installed on an X.25 Network. Port three of the PAD will be verified to operate correctly before it is connected to the Network. See figure 4-1. A call will be placed with the HP 4952A Protocol Analyzer through the PAD onto port 3 to the terminal connected to port 3. Data will be sent after the link has been established, then the call will be cleared.

This test, if successful, is a good indicator that the PAD will operate correctly when connected to the X.25 Network.

Emulation Editor Description

There are several prewritten emulation tests provided with the HP 18267A. See Chapter 5 for installation procedure which uses these tests. These tests may be used as is, modified, or you may create your own. To modify or create tests, the Emulate menu must be used. This chapter shows how to modify or create tests by demonstrating, with an example, the steps required.

The X.25 Level 2 Emulator application replaces the Simulate softkey **<Sim Menu>** with the **<Emul Menu>** softkey. The **<Emul Menu>** softkey lets you enter the Emulate menu where you can create and edit X.25 emulation menus which are similar to simulate menus.

If you are not familiar with the top level menu, press the **[MORE]** key several times to see the relative position of the **<Emul Menu>** softkey. You can always return to the top level menu from any of the other menus by pressing the **[EXIT]** key.

NOTE

When an Emulate menu is stored to disc as an extended menu, all the Setup menus are saved with that file.

The **<Emul Menu>** softkey accesses the Emulate menu. The Emulate menu instruction set is identical to the Simulate menu instruction set, except for the following changes:

Level 1 Emulation

Level 1 is automatically brought up by the emulator. If DTE is selected as device simulating then DTR and RTS are driven on. Level 1 handshaking is not required from the device under test.

If DCE is selected as device simulating then CTS, CD, and DSR are driven on. Level 1 handshaking is not required from the device under test.

Level 2 Emulation - The Set Lead Command

NOTE

The Set Lead command works differently in the Emulate menu than it does in the Simulate menu

Set Lead Command - Set Lead "ON"

The Set Lead RTS, DTR, CTS, DSR, or CD "ON" command brings up the Level 2 link by sending a SABM (SABME with Extended Control On). Level 2 is determined to be "up" after a UA is received.

If the Set Lead "ON" command is not initiated by the emulator, then it is assumed the other device will bring up the Level 2 link by sending a SABM or SABME. The emulator will respond with a UA. It does not matter which lead is specified in the Set Lead command, they all work the same.

Set Lead Command - Set Lead "OFF"

The Set Lead RTS, DTR, CTS, DSR, or CD "OFF" command causes the emulator to bring down the Level 2 link by sending a DISC frame.

Level 3 Emulation - The Send Statement

Send Statement

All Send Statements are assumed to be Level 3 packet strings. The frame level address and control bytes are ignored if manually entered, but they must be included to hold space in the string. A Two byte space is needed if Extended Control is set Off in the Level 2 Setup menu, and a three byte space is needed if Extended Control is set On. The easiest way to type the string is to use Level 3 Assisted String Entry which is accessed by pressing the **<Levl 3>** softkey after **<Send>** is pressed. The appropriate number of spaces will be left for the address and control bytes.

Send $0_0\ 0_0\ 1_0\ 0_0\ F_B$ GG

Address Field — Control Field

Two bytes (three bytes if Extended Control is On) are automatically inserted for the Level 2 information when Level 3 Assisted Entry is used.

The frame level address byte of the transmitted packet is determined in the Level 2 Setup menu's Device Emulating field. The address byte is displayed as 0_0. The actual value is inserted during runtime. If the Device Emulating field is selected to be a Network, then the Command Address will be 0_3 and the Response Address will be 0_1. If the Device Emulating field is selected to be a Subscriber, then the Command Address will be 0_1 and the Response Address will be 0_3.

The frame level control byte is displayed as 0_0. The actual value is inserted during runtime based on whether Extended Control was chosen.

If Auto LCN insertion or Auto LCN using counter 5 is selected in the Level 3 Setup menu, then the LCN field may or may not be overwritten depending on the packet type transmitted. Refer to Chapter 3 for more information. The LCN byte must be included in the string to hold space.

The Call Req/Inc Call packet address field (transmitted by the emulator) is inserted into the send string at runtime if Auto address insertion has been selected in the Level 3 Setup menu. No dummy characters should be entered into the send string for either the address length or the addresses themselves, except if Auto Address Insertion is set Off. Refer to the Call Setup Menu section for more information on how to enter the Calling/Called address to be used with Auto Address insertion.

Executing the Emulate Menu

To execute the Emulate menu press **<Run Menu>**, then **<Emulate>**.

In the Run menu, data filters can be set up to filter data or leads out of the buffer while running. The data filter default is Off.

Setting Up the Emulator

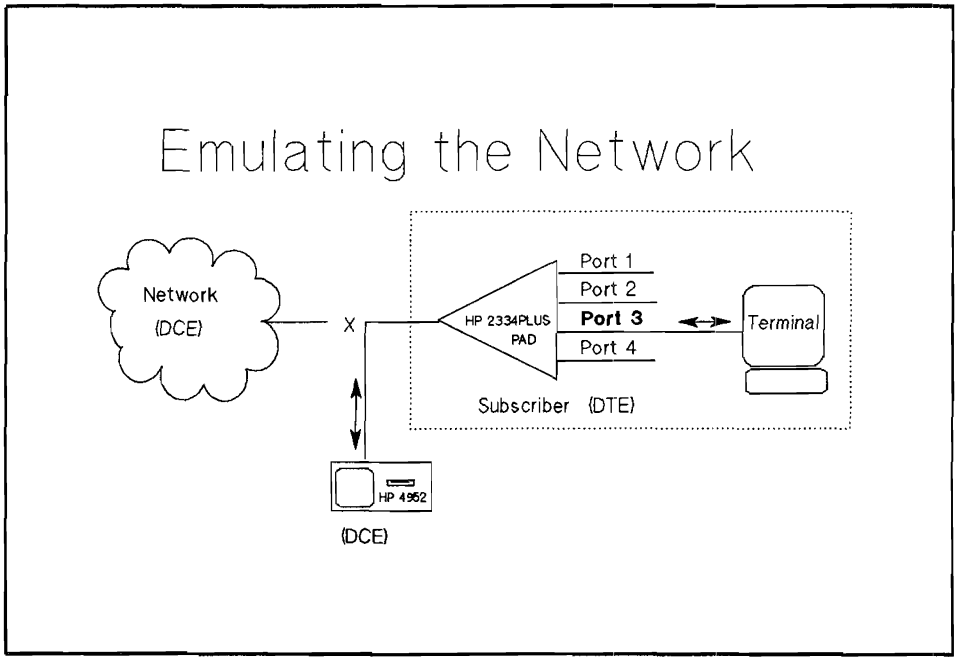

Figure 4-1. Emulating the Network

NOTE

The HP 18267A X.25 Emulator application must be loaded before proceeding.

Configuring the Level 1 Setup Menu

The Level 1 setup parameters are unique to each system. For this example the default parameters match the HP 2334A PAD parameters. View the Level 1 Setup menu to make sure they do match.

From the Top level menu press the **<Set Up>** softkey.

Now press the **<Lev 1 Setup>** softkey.

```
                Level 1 Setup

Protocol        X.25
Code            ASCII 8     Display     X25-1
Bits/sec        9600        Err chk     CCITT
Parity          None

                            DTE clock   DTE
Mode            Sync
                            Bit sense   Norm.

            Rev 1.0 © hp 1986
ASCII   Hex                                     EBCDIC
  8       8
```

Figure 4-2. Level 1 Setup Menu

After the Level 1 Setup has been checked or modified if necessary, press the **[EXIT]** key once.

Configure the Level 2 Setup Menu

Press the **<Lev 2 Setup>** softkey.

The display appears as shown in figure 4-3. An explanation of each parameter is given in chapter 3.

```
Level 2 Setup Menu

Device Emulating          Network
   Command Address        = 03
   Response Address       = 01

Frame size (N1)           9999 bytes
Window size (K)           2

Timer T1                  3000 msecs
Retry Count (N2)          20

Extended Control          Off
Rev 1.0 @ hp 1986
Net-  Sub-                Print
work  scriber             Scrn
```

Figure 4-3. Level 2 Setup Menu

Device Emulating	**Network**	
	Command Address	0_3
	Response Address	0_1

The HP 4952A will be set up as the Network because the HP 2334A PAD is configured as a subscriber. See figure 4-1.

Frame size (N1) **9999**

The frame size can be from 1 to 9999 bytes. By leaving the value at 9999 (default), all frame sizes are accepted by the emulator.

Window size (k) **7**

The window size is typically 2 (default), but the HP 2334A PAD is 7. This will indicate that up to seven frames can be unacknowledged at any one time.

Timer T1 **3000 msec**

Timer T1 is left at default which matches the HP 2334A PAD's T1 timer.

Restart Count (N2) **20**

Restart Count (N2) is left at default which matches the Restart Count of the HP 2334A PAD.

Extended Control **Off**

The HP 2334A PAD does not support extended control.

The Level 2 Setup is now complete. Press the [EXIT] key once.

Configuring the Level 3 Setup Menu

Press the **<Lev 3 Setup>** softkey.

The Level 3 Setup menu is displayed in figure 4-4 with default settings. An explanation of each setting is given in Chapter 3.

```
Level 3 Setup Menu

Virtual Call LCNs        1  -  255

Auto P(s), P(r)                 On
  Auto Level 3 RRs              On
Auto Restart Cnf                On
Auto Call Acc/Con, Clr Cnf      On

Auto Address Insertion
  from Call Setup Menu          On
Auto LCN Using Counter 5        On

Rev 1.0 © hp 1986

Use Keyboard
```

Figure 4-4. Level 3 Setup Menu

Virtual Call LCNs **1 - 8**

The LCN range 1 - 8 will be used because it matches the HP 2334A PAD. The Virtual Call LCN range is compared against incoming packets to make sure they are within the LCN range specified. If they are not within the range specified, the packet is rejected.

Auto P(s), P(r) **On**

With the Auto P(s), P(r) set On, the emulator will automatically insert the P(s) and P(r) counts into the appropriate outgoing packets.

Auto Level 3 RRs **On**

Since no data packets will be received by the emulator during this test, it does not matter whether Auto Level 3 RRs is set On or Off.

Auto Restart Conf **On**

Since no Restart Request/Restart Indication packets will be received by the emulator during this test, it does not matter whether Auto Restart Confirmation is set On or Off.

Auto Call Acc/Con, Clr Cnf **On**

Since no Call Request or Incoming Call packets will be received by the emulator during this test, it does not matter whether Auto Call Acc/Con, Clr Cnf is set On or Off.

Auto Address Insertion **On**

The first call initiated by the emulator will go to the first address defined in the Call Setup menu.

Auto LCN Insertion **On**

Enables emulator to select from LCN range determined in the Virtual Call LCNs field. The send string LCN is overwritten during runtime if Auto LCN Insertion is set On.

Press the [EXIT] key once.

Configure the Call Setup Menu

Press **<Call Setup>**.

For the sample test:

Type in the Called/Calling Addresses **3035551212/7195551212** in the Call #1 field of the Call Setup menu.

Display Definition Setup Menu

The **<Disp Def>** Softkey lets you modify the five predefined custom display formats which are loaded with the X.25 Level 2 Emulator. These display formats determine how information is displayed in the Examine Data menu.

The X.25 user defined display formats are selected in the Level 1 Setup menu's Display field, or in the Examine Data menu. See figure 3-5 for an example.

Selecting a User Definable Display

The steps required to access the user definable displays are as follows:

1. Select **<Set Up>** in the main level menu, then press **<Lev 1 Setup>**.
2. Move the cursor into the Display field. The Display field softkeys will appear.
3. Select the X.25 display (one through five) that you wish to use.
4. Press **[EXIT]** twice to return to the top level menu.

or

1. Select **<Examine Data>** in the main menu.
2. Press **[MORE]** twice, then **<Chang Dsply>**.
3. Select the X.25 display (one through five) that you wish to use. After selecting the X.25 user-definable display you wish use, the display returns to the Examine Data menu with the cursor at the same frame.

Writing the Test

The following test is listed first, then described line by line.

This test will make sure the HP 2334A PAD is ready to be connected to the X.25 Network. It will send a Restart Request, place a call, send data, and then clear the call.

NOTE

The first line of the Emulate menu will read "Simulate DCE" or "Simulate DTE".

Go to Emulation Test Description following this test listing for an explanation of each line.

Simulate **DCE**

<u>Block 1</u>
Set Lead **CTS On**

<u>Block 2</u>
Send ◀ 0_0 0_0 1_0 0_0 F_B [66]

When DTE ◀ X ? ? X F_F

then goto Block 3

<u>Block 3</u>
Send ◀ 0_0 0_0 1_0 0_0 0_B [66] ▶

When DTE ◀ X ? ? X 0_F

then goto Block 4

Block 4
Send ◀0_0 0_0 1_0 0_1 0_0 SENDING DATA PACKET [GG] ▶

When DTE ◀ X ? ? X 0_1

then goto Block 5

Block 5
Send ◀0_0 0_0 1_0 0_0 1_3 [GG] ▶

When DTE ◀ X ? ? X 1_7

then goto Block 6

Block 6
Set Lead **CTS Off**

and then

Stop Tests

Emulation Test Description

Simulate **DCE**

Block 1
Set Lead **CTS On**

Procedure to Bring Up Level 2 Link
Press [MORE], then <Set Lead>.

Select <CTS> and <On>.

Move the cursor down to Block 2 with the down arrow keys.

Comments
The "Set Lead CTS On instruction brings up the Level 2 link. A "Set Lead CTS Off command will bring down the link. You could also use DSR or CD to bring up or down the link.

Block 2
Send $0_0\,0_0\,1_0$ **GG**

Procedure to Send a Restart Packet
Press <Send>

Press [MORE], then <Levl 3> for Level 3 assisted entry.

Comments on Selecting the Address/Control Fields
The Level 2 Address and Control fields are shown as 0_0 and 0_0. These are dummy values. They hold a space in the Send string. The real values are inserted automatically during runtime based on the Device Emulating value chosen in the Level 2 Setup menu.

Since we chose the Device Emulating in the Level 2 Setup menu to be a Network then the command and response address bytes will be 0_3 and 0_1 respectively. If you had chosen the Device Emulating to be a Subscriber then the command and response address bytes would be 0_1 and 0_3 respectively.

The Control field always indicates an Information frame since all Level 2 functions are taken care of by the emulator. N(r) and N(s) are automatically entered by the emulator.

Send $0_0\,0_0$ 00010000 **GG**

The GFI and LCGN Fields
Press the <GFI> softkey.

Move the cursor with right arrow key to see the GFI and LCGN defaults. These are: Q=0, D=0, Mod 8 = 1, and LCGN = 00. These are the values the test will use. These values can be changed for other tests.

Send $0_0\,0_0\,1_0\,0_0$ **GG**

The Logical Channel Number
Move the cursor past the LCGN parameter. The LCN field is displayed as 0_0.

Comments on the Logical Channel Number
A Restart packet requires the logical channel to be 0_0.

When a Call packet is being sent, and you are simulating a Network (DCE), the LCN should be selected from the low end of the LCN range.

When a Call packet is being sent, and you are simulating a Subscriber (DTE), the LCN should be selected from the high end of the LCN range.

Send $0_0\,0_0\,1_0\,0_0\,F_B$ **GG**

Selecting the Restart Packet
Move the cursor out of the LCN field. Press the [MORE] key twice, and then the <RSTRT> softkey. You may wish to add the cause and diagnostic fields at this point.

Move the cursor down with the down arrow key to exit this string.

Comments on the Packet Type Field
The packet field defaults to a Data packet. If you move the cursor in the Data packet with the left and right arrow key, you will notice that you may manually enter the P(s), M, and P(r) values. Notice they default to 0. During runtime the emulator will take care of the P(s) and P(r) values for the Data packet if Auto P(s), P(r) is set "On" in the Level 3 Setup menu.

Any values you place in the P(s) and P(r) fields will be overwritten if Auto P(s), P(r) is set "On" in the Level 3 Setup menu.

Triggering On a Restart Confirmation Packet

```
When  DTE
```

Press <When Trig>, then select <DTE>.

```
When  DTE  ◀ X ? ?
```

Press [MORE], then <Levl 3>.

```
When  DTE  ◀ X ? ? X F_F
```

Press <Packet Type>, then select the Restart Confirmation packet by pressing [MORE] twice, and then <RSTRT CNFM>.

```
then goto Block  3
```

Move the cursor down with the down arrow key to Block 3.

Special Comments On Triggering
The program is triggering on the DTE sending a Restart Confirmation packet.

The X in the When string indicates a don't care. The ? indicates a byte with partial don't care bits.

Block 3

```
Send  ◀ 0_0 0_0 1_0 0_0 0_B   [66] ▶
```

Sending a Call Request Packet
Press <Send>.

Press [MORE], then <Levl 3> for Level 3 assisted entry.

Press <Packet Type>, and then press <CALL>.

Block 3

Send ◀0_0 0_0 1_0 0_0 0_B 0_0 [GG] ▶

Press <Hex>, then enter 0_0 after the Call packet for the facilities field length.

Move the cursor down with the down arrow key to exit the Send string.

Comments on the Called/Calling Address

The Called/Calling Address lengths and addresses do not have to be entered in the Send string as long as they are entered in the Call Setup menu, and Auto Address Insertion is set On. The emulator will calculate the length and enter the value and addresses into the appropriate position of the packet during runtime. No dummy characters are needed.

Comments on Using Facilities

The Facilities Field length is inserted to show where it is placed when Auto Address Insertion is set On. It is optional.

If the network has facilities chosen, they must be entered in the send string.

When DTE X ? ? X 0_F
then goto Block 4

Triggering On a Call Accepted Packet
Press <When Trig>, then select <DTE>.

Press [MORE], then <Levl 3>.

Press <Packet Type>, then select the Call Accept packet by pressing the <CALL ACPT> softkey.

Move the cursor down with the down arrow key to Block 4.

Comments
The program is triggering on the DTE sending a Call Accept packet.

Block 4

Send 0_0 0_0 1_0 0_1 0_0 SENDING DATA PACKET **GG**

Sending a Data Packet
Press <Send>.

Press [MORE], then <Levl 3>.

Press <LCN> and enter 0_1 Hex assuming the call will be placed on LCN 0_1. Data packets require the LCN value to be entered manually even though Auto LCN Using Counter 5 is being used.

Press <DATA>.

Move the cursor 2 spaces to the right and type in "SENDING DATA PACKET"

Move cursor down with down arrow key.

When DTE X ? ? X 0_1
then goto Block 5

Triggering on a Receiver Ready Packet

Press <When Trig>, then <DTE>.

Press [MORE], then <Levl 3>.

Press <Packet Type>, then select the Receiver Ready packet by pressing the <RR> softkey.

Move the cursor down with the down arrow key to Block 5.

Block 5

Send $0_0\,0_0\,1_0\,0_1\,1_3$ **GG**

Sending a Clear Request Packet

Press <Send>.

Press [MORE], <Levl 3>.

Press <LCN>, then <Hex>. Enter 0_1.

Select the Clear Request Packet by pressing [MORE], then the <CLEAR> softkey. You may wish to add the cause and diagnostic fields at this point.

Move cursor down with down arrow key.

When DTE ◀X ? ? X 1$_7$ then goto Block 6	**Triggering on a Clear Confirmation Packet** Press <When Trig>, then <DTE>. Press [MORE], then <Levl 3>. Press <Packet Type>, then select the Clear Confirmation packet by pressing [MORE], and then the <CLR CNFM> softkey. Move the cursor down with the down arrow key to Block 6.
Block 6 Set Lead **CTS Off**	**Bringing Down the Level 1 and 2 Link** Press [MORE], then <Set Lead>. Select <CTS> and <Off>. Comments The "Set Lead CTS Off" instruction brings down the Level 1 and Level 2 link by sending a Disconnect.
and then	Press <and then>.
Stop Tests	Press <Stop>, then <Tests>.

5

Procedure for Installing and Troubleshooting X.25 Equipment and Networks

Using the X.25 Test Library and Emulator

The X.25 Test Library and Emulator is a tool intended for installation and troubleshooting of X.25 equipment and networks. This tool provides prewritten tests most of which run on the X.25 Level 2 Emulator to aid in installing and troubleshooting.

A typical installation will consist of adding a subscriber to an X.25 Network. The subscriber equipment usually is an X.25 PAD with multiple asynchronous terminals attached.

The steps for installation testing are outlined below. They are intended to be followed in the order presented: Setup the HP 4952A, verify parameters of the network and subscriber equipment, verify operation of each side before and after installation. If you prefer, skip to step 3 or 4. If problems are found, come back to step 1 to troubleshoot the problem.

X.25 Test Library tests are used in this chapter. There is both a DCE and DTE version of each test. The device under test must first be determined to be the DCE or DTE before the tests can be used. See Step 1 below. For information on how to run the tests and interpret the results, refer to chapter 6 where the tests are listed and described.

Step 1: Determining the Equipment Parameters

The step 1 tests determine the Level 1, Level 2, and Level 3 parameter values of the network and equipment to be installed. These parameters will be used to assure that the configuration of the network and the equipment to be installed are compatible. The parameters also will be used for further testing.

The network's parameters will first be determined, then the subscriber's. See figure 5-1 for test installation.

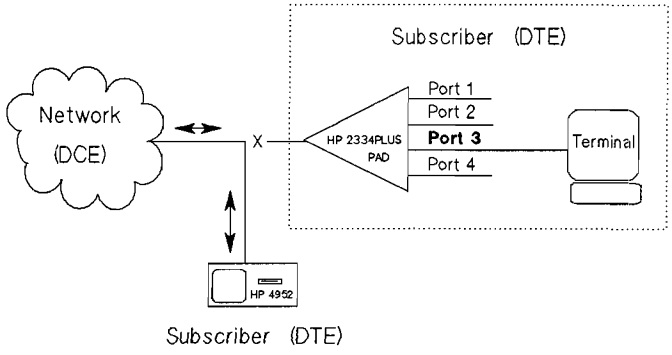

Figure 5-1. Network Test Setup

NOTE

The X.25 Level 2 Emulator should NOT be loaded yet.

Level 1 Setup Parameters

There are no tests available to determine the following Level 1 setup parameters:

Data bits/sec
DTE clock source
Bit sense

It is necessary to know the network's configuration for these parameters before testing begins. The data code used by most X.25 networks is "ASCII 8". The bit sense for most networks is "normal".

Connect the HP 4952A up to the network. Do not load the X.25 Level 2 Emulator yet.

Load the X.25 Test Library monitor menu LEVEL1_MON. This test identifies whether the network is configured as a physical DCE or DTE.

Execute the monitor menu LEVEL1_MON by pressing **<Run Menu>** followed by **<Monitor Line>**. See Chapter 6 for information on how to interpret the results.

Record the Level 1 values of speed (bits/sec), data code, DTE clock, and bit sense on the Installation Record page at the end of this chapter.

Level 2 Setup Parameters

If the results for the LEVEL1_MON test were "Emulator=DTE", load the X.25 Test Library simulate menu DTE_SUBNET. This test will determine whether the emulator will be the subscriber or the network for Level 2 addressing, whether Extended control is active, and what values Timer T1 and Retry Count N2 have.

Execute DTE_SUBNET by pressing **<Run Menu>** followed by **<Simulate>**. See Chapter 6 to interpret results.

Now load the X.25 Level 2 Emulator application. See Chapter 2 for installation instructions.

To determine the frame size used by the network, load and execute the X.25 Test Library test DTE_FRAME. See Chapter 6 for information on how to execute this test and interpret the results.

There are no tests available to determine the Level 2 window size. If this value is not known, it will need to be obtained from the network configuration information. A window size of 2 is commonly used.

Record the Level 2 parameter values on the Installation Record page at the end of this chapter.

Level 3 Setup Parameters

To determine the Virtual Call LCN range, use one of two tests provided: DCE_LCN1 or DCE_LCN2 (also DTE versions).

DCE_LCN1 will locate each end of the LCN range for X.25 equipment and networks which will reject calls placed outside the LCN range.

DCE_LCN2 can be used to find one end of the LCN range for other equipment and networks.

Refer to Chapter 6 for information on how to execute these tests and interpret the results.

Determining the Subscriber Equipment Parameters

Repeat the process on the subscriber equipment (PAD) using the other version of the tests (DCE versions if the DTE versions were just used). Record the results for later use in the Installation Record at the end of this chapter. See figure 5-2 for test setup.

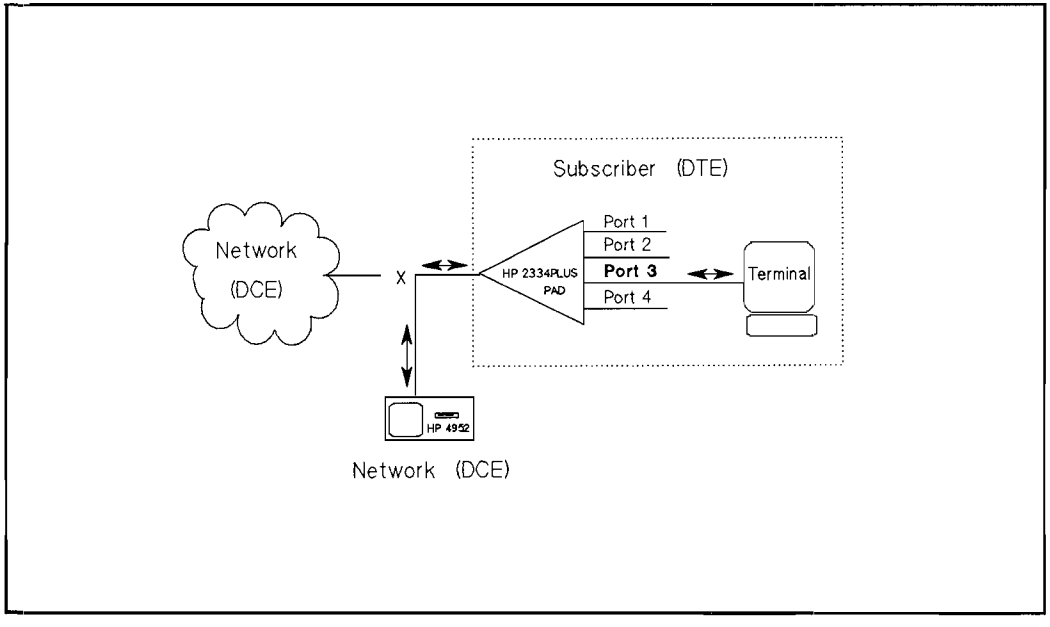

Figure 5-2. Subscriber Test Setup

Step 2: Ensuring Network/Subscriber Parameter Consistency

In step 1 the Level 1, 2, and 3 parameters were determined and recorded in the Installation Record for both the network and the subscriber equipment. Make sure that the network and subscriber equipment are not both physical DTE's or DCE's, and that they are not both a network or subscriber. If either of these situations exist, they must be remedied before installation. Also make sure the other parameters, such as T1 timer, window size, etc., are the same for the network and subscriber equipment.

Step 3: Ensuring Network/Subscriber Operation Before Installation

Before installing the subscriber equipment to the network, load and execute the appropriate X.25 Test Library menu either DTE_CALL_1 or DCE_CALL_1 on the network and subscriber equipment to ensure proper operation. This test places a call to a single logical channel number, sends data, and clears the call. If you would like to test multiple logical numbers, load and execute the X.25 Test Library test either DTE_CALL_M or DCE_CALL_M on the network and subscriber equipment instead. Refer to Chapter 6 for information on how to execute these tests and interpret the results.

If your network or equipment requires the appropriate facilities to be listed in the Call packets, modify the Call packet in the Emulate menu. Refer to Chapter 6 for information on how to add facilities.

Step 4: Ensuring Network/Subscriber Operation After Installation

Now that you have tested the network and subscriber equipment separately, connect them together. In some situations you may start installation testing at this step. If improper operation is indicated here in step 4, start at step 1 and go through the process. This will most likely find the problem.

Load and execute the X.25 Test Library monitor test MON_TEST. This test will give results indicating whether the network and subscriber equipment are working properly. This test is not foolproof, but should give a high level of confidence that the installation is operational. Refer to Chapter 6 for information on how to execute this test and interpret the results.

Installation Record

Identification

Network Port -
Subscriber -

Parameters	Network	Subscriber (PAD)
Level 1 Parameters		
Speed (bits/sec)		
Data Code		
DTE Clock		
Bit Sense		
Device Emulating		
Level 2 Parameters		
Frame Size (N1)		
Window Size (k)		
Timer (T1)		
Retry Counter (N2)		
Extended Control		
Level 3 Parameters		
Virtual Call LCN Range		
Window Size		
Facilities Subscribed		

6

X.25 Test Library Emulate Menu Listings

The X.25 Test Library tests are intended for installation and troubleshooting of X.25 equipment and networks. Refer to Chapter 5 for an installation procedure using the following tests.

The HP 4952A is connected to the device under test for all tests.

LEVEL1_MON

This test checks the DTR and DSR leads of the device under test to determine whether the HP 4952A should emulate the DTE or the DCE.

This is a monitor menu (Emulator not loaded).

To execute this test press **<Run Menu>**, then **<Monitor Line>**. The test will beep when it completes.

Test Results

If DTR is high, the message reads EMULATOR = DCE.
If DSR is high, the message reads EMULATOR = DTE.
If neither DTR or DSR is high, the message reads DTR & DSR NOT ON.

NOTE

Once the emulator is determined to be the DCE or DTE device, use the tests prefixed by that device name, i.e., DCE_ or DTE_ respectively.

LEVEL1_MON Listing

```
Monitor

Block  1
Message CHECK DTE LEADS

If Lead DSR  is  On
   then goto Block  3
If Lead DTR  is  OA
   then goto Block  4
Block  2
Message DTR & DSR NOT ON
   and then
Beep
   and then
Goto Block  5

Block  3
Message EMULATOR = DTE
   and then
Beep
   and then
Goto Block  5
Block  4
Message EMULATOR = DCE
   and then
Beep

Block  5
Goto Block  5
```

DTE_SUBNET/DCE_SUBNET

This test determines the following Level 2 Setup parameters:

Network/Subscriber
Timer T1
Retry Count N2
Extended Control

This is a Simulate menu (Emulator not loaded)

To execute this test press **<Run Menu>**, then **<Simulate>**.

Test Results

The test looks at the link level address to determine if the device under test is the network or the subscriber. If after 10 seconds, the device under test has not sent a command, the emulator sends a SABM with address 1, waits for a response, then sends a SABM with address 3, waits for a response, then sends a SABME with address 1, waits for a response, then sends a SABME with address 3. Once a response has been received, the emulator beeps and displays one of the following messages:

EM = SUBSCRIBER
EMUL = NETWORK
EM = SUB, EXT CT (Emulator = Subscriber, Extended Control On)
EM = NET, EXT CT (Emulator = Network, Extended Control On)

You can stop the test at this point by pressing **[EXIT]**, or allow the test to continue to determine Timer T1 and Retry Count N2.

If this test is left to run, Timer T1 and Retry Count N2 are determined. This portion of the test may take several minutes. When the test completes, the HP 4952A beeps again. Check Counter 1 for N2, and Timer 1 for the approximate value of T1.

Setup the appropriate Level 2 Setup parameters accordingly.

DCE_SUBNET Listing


```
Simulate  DCE

Block   1
Message  BRING UP LEVEL 1
   and then
Set Lead  CS      On
   and then
Set Lead  CD      On

If Lead  DTR   is  Off
   then goto Block  27
If Lead  RS    is  Off
   then goto Block  27
If Lead  RTS   is  Off
   then goto Block  28
Block   2
Message  WAIT FOR SABM,DM
   and then
Reset Timer  1
   and then
Start Timer  1

When DTE  [illegible]
   then goto Block  13
When DTE  [illegible]
   then goto Block  17
When DTE  [illegible]
   then goto Block  11
When DTE  [illegible]
   then goto Block  15
When DTE  [illegible]
   then goto Block   3
When DTE  [illegible]
   then goto Block   5
When Timer  1   >  10000
   then goto Block   3
Block   3
Reset Counter  1
```

```
Block   4
Message   SABM,  ADDR  =  1
   and  then
Reset  Timer  1
   and  then
Start  Timer  1
   and  then
Increment  Counter  1  by          1
   and  then
Send  1 [illegible]

If  Counter  1    >          2
   then  goto  Block     5
When  DTE  [illegible]
   then  goto  Block    12
When  Timer  1    >     4000
   then  goto  Block     4
Block   5
Reset  Counter  1

Block   6
Message   SABM,  ADDR  =  3
   and  then
Reset  Timer  1
   and  then
Start  Timer  1
   and  then
Increment  Counter  1  by          1
   and  then
Send  1 [illegible]

If  Counter  1    >          2
   then  goto  Block     7
When  DTE  [illegible]
   then  goto  Block    14
When  Timer  1    >     4000
   then  goto  Block     6
Block   7
Reset  Counter  1
```

```
Block   8
Message  SABME, ADDR = 1
   and then
Reset Timer 1
   and then
Start Timer 1
   and then
Increment Counter 1 by        1
   and then
Send  1 9 7 6 0 ▸

If Counter 1   >        2
   then goto Block    9
When DTE  9 7 6 0 ▸
   then goto Block   16
When Timer 1   >    4000
   then goto Block    8
Block   9
Reset Counter 1

Block 10
Message  SABME, ADDR = 3
   and then
Reset Timer 1
   and then
Start Timer 1
   and then
Increment Counter 1 by        1
   and then
Send  1 9 7 6 0 ▸

If Counter 1   >        2
   then goto Block   19
When DTE  9 7 6 0 ▸
   then goto Block   18
When Timer 1   >    4000
   then goto Block   10
Block 11
Send  1 9 7 6 0 ▸
```

```
Block 12
Message EM = SUBSCRIBER
   and then
Goto Block 20

Block 13
Send 192GG

Block 14
Message EMUL = NETWORK
   and then
Goto Block 20

Block 15
Send 192GG

Block 16
Message EM = SUB, EXT CT
   and then
Goto Block 20

Block 17
Send 192GG

Block 18
Message EM = NET, EXT CT
   and then
Goto Block 20

Block 19
Message NO RESPONSE
   and then
Goto Block 20

Block 20
Reset Counter 1
   and then
Beep
   and then
Increment Counter 1 by 1

When DTE 3FGG
   then goto Block 21
```

```
Block 21
Reset Timer 1
   and then
Start Timer 1
Block 22
Reset Timer 2
   and then
Start Timer 2
   and then
Increment Counter 1 by          1

When DTE 2666r
   then goto Block  23
When Timer 2   >  10000
   then goto Block  24
Block 23
Stop Timer 1
   and then
Goto Block  22

Block 24
Stop Timer 2
   and then
Reset Timer 2
   and then
Beep
   and then
Goto Block  25

Block 25
Message  PRESS SUMMARY
   and then
Beep
```

```
Block 26
When DTE X
   then goto Block 26
Block 27
Message DTR NOT ACTIVE

When Lead DTR goes On
   then goto Block 1
Block 28
Message RTS NOT ACTIVE

When Lead RS goes On
   then goto Block 1
```

DTE_FRAME/DCE_FRAME

This test determines the maximum frame size allowed by the device under test up to and greater than 128 bytes.

This is an Emulate menu test (X.25 Level 2 Emulator loaded)

Test Setup

Update the Level 1 Setup menu so that the parameters match device under test.

Update the Level 2 Setup menu parameters with the values determined by DTE_SUBNET or DCE_SUBNET.

Enter the device under test's Called/Calling Address in the Call Setup menu's Call #1 field.

This test assumes LCN 1 will be used for the call. If a different LCN is desired for the call, enter the Emulate menu and change the Increment Counter 5 by 1 statement in Block 1 to reflect the desired LCN. For example, if you wish to use LCN 8, change the Increment Counter 5 statement to:

Increment Counter 5 by 8

If facility information is required by the device under test in the Call packet, that information must be entered in the Call packet send string in Block 4 of the Emulate menu. Enter the facilities into the send string in place of 0_0 which follows 0_B.

To execute this test press **<Run Menu>**, then **<Emulate>**. The test beeps when it completes.

Test Results

The emulator waits 5 seconds for a restart from the device under test. If no resart is received, a SABM is sent and the emulator waits again for a restart from the device under test. If no restart is received, the emulator sends a restart, waits for confirmation, and starts the test. A call is placed to the device under test, and then packets of sizes 16, 32, 64, 128, and > 128 bytes are sent. The emulator will display an appropriate message indicating the maximum frame size after a frame is rejected.

One of the following messages will appear:

PACKET SIZE < 16
PACKET SIZE = 16
PACKET SIZE = 32
PACKET SIZE = 64
PACKET SIZE = 128
PACKET SIZE > 128

DCE_FRAME Listing

```
Simulate DCE

Block 1
Message WAIT FOR RESTART
   and then
Reset Counter 5
   and then
Increment Counter 5 by 1
   and then
Reset Timer 1
   and then
Start Timer 1

When DCE 1XRRXR
   then goto Block 4
When DTE 1XR
   then goto Block 2
When Timer 1 > 5000
   then goto Block 2
```

```
Block   2
Message      SABM SENT
   and then
Set Lead  CTS      On

When DTE  1[illegible]
   then goto Block    3
Block   3
Message      RESTART SENT
   and then
Reset Timer  1
   and then
Start Timer  1
   and then
Send  1[illegible]

When DTE  1[illegible]
   then goto Block    4
When Timer  1   >    3000
   then goto Block    2
Block   4
Message      WAIT CALL CONF
   and then
Send  1[illegible]

When DTE  1[illegible]
   then goto Block    5
When DCE  1[illegible]
   then goto Block   13
Block   5
Message  PACKET SIZE < 16
   and then
Send  1[illegible]PACK SIZE = 16
[illegible]

When DTE  1[illegible]
   then goto Block    6
When DTE  1[illegible]
   then goto Block   11
```

DCE_FRAME Listing (Continued)

```
Block   6
Message  PACKET SIZE = 16
   and  then
Send  %%%%%%PACKET SIZE =
32  XXXXXXXXXXXXXXXX↵↳GG▸

When DTE  1XX
   then goto Block   7
When DTE  1XX
   then goto Block  11
Block   7
Message  PACKET SIZE = 32
   and  then
Send  %%%%%%PACKET SIZE =
64  XXXXXXXXXXXXXXXXXXXXXXXXXXXX
XXXXXXXXXXXXXXXXXXXXXXXXXXXX↵↳
GG▸

When DTE  1XX
   then goto Block   8
When DTE  1XX
   then goto Block  11
Block   8
Message  PACKET SIZE = 64
   and  then
Send  %%%%%%PACKET SIZE =
128  XXXXXXXXXXXXXXXXXXXXXXXXXXXX
XXXXXXXXXXXXXXXXXXXXXXXXXXXXXXXX
XXXXXXXXXXXXXXXXXXXXXXXXXXXXXXXX
XXXXXXXXXXXXXXXXXXXXXXXXXXXXXXXX
XXXXXXXXXXXXXXXX↵↳GG▸

When DTE  1XX
   then goto Block   9
When DTE  1XX
   then goto Block  11
```

DCE_FRAME Listing (Continued)

```
Block   9
Message  PACKET SIZE =128
   and then
Send  1%%%%%PACKET SIZE >
128 BYTES.  XXXXXXXXXXXXXXXX
XXXXXXXXXXXXXXXXXXXXXXXXXXXX
XXXXXXXXXXXXXXXXXXXXXXXXXXXX
XXXXXXXXXXXXXXXXXXXXXXXXXXXX
XXXXXXXXXXXXXXXXXXXXXXXXXXXX
XXXXXXXXXXXXXXXXXXXXXXXXXXXX
XXXXXXXXXXXXXXXXXXXXXXXXXXXX
XXXXXXXXXXXXXXXXXXXXXXXXXXXX
XXXXXXXXXXXXXXXXXXXXXXXXXXXX
XXXXXXXXXXXXXXXXXXXXXXXXXXXX

When DTE  1%%
   then goto Block  10
When DTE  1%%
   then goto Block  11
Block  10
Message  PACKET SIZE >128

Block  11
Beep

Block  12
When DTE  %
   then goto Block  12
Block  13
Message  .CALL CLEARED
   and then
Goto Block  13
```

DTE_LCN1/DCE_LCN1

This test determines what switched virtual LCN range the device under test is set up for. It only is an effective test if the device under test clears calls which are outside its switched virtual LCN range.

If the device under test will accept all calls regardless of the LCN used, use the DTE_LCN2 or DCE_LCN2 test instead.

This is an Emulate menu test (X.25 Level 2 Emulator loaded)

Test Setup

Update the Level 1 Setup menu so that the parameters match device under test.

Update the Level 2 Setup menu parameters with the values determined by DTE_SUBNET or DCE_SUBNET.

Enter the device under test's Called/Calling Address in the Call Setup menu's Call #1 field.

If facility information is required by the device under test, that information must be entered in the Call packet send strings in Block 4 and 6 of the Emulate menu. Enter the facilities into the send string in place of 0_0 which follows 0_B.

To execute this test press **<Run Menu>**, then **<Emulate>**. The test beeps when it is completed.

Test Results

The emulator waits 5 seconds for a restart from the device under test. If no resart is received, a SABM is sent and the emulator waits again for a restart from the device under test. If no restart is received, the emulator sends a restart, waits for confirmation, and starts the test.

Calls are then placed by the emulator starting on LCN1, then LCN2, then LCN3, etc., until a call is accepted. The LCN which a call was first accepted is assumed to be the lowest legal switched virtual LCN. Calls are then placed and cleared on subsequent LCNs until calls are no longer accepted. The last LCN on which a call was accepted is assumed to be the highest legal switched virtual LCN.

Counter 1 indicates the lowest legal switched virtual LCN.

Counter 2 indicates the highest legal switched virtual LCN.

Some devices require a few seconds delay between clearing a call and placing another call to the same address. This test is set up for a delay of 6 seconds between calls. If a shorter or longer delay is desired, modify the wait statements in Block 4 and 6.

DCE_LCN1 Listing

```
Simulate DCE

Block 1
Message WAIT FOR RESTART
  and then
Reset Counter 1
  and then
Reset Counter 2
  and then
Reset Counter 5
  and then
Reset Timer 1
  and then
Start Timer 1

When DCE 1 2 3 4 5
  then goto Block 4
When DTE 1 2 3 4 5
  then goto Block 2
When Timer 1 > 5000
  then goto Block 2
Block 2
Message SABM SENT
  and then
Set Lead CTS On

When DTE 1 2 3 4 5
  then goto Block 3
```

DCE_LCN1 Listing (Continued)

```
Block   3
Message   RESTART SENT
   and  then
Reset  Timer  1
   and  then
Start  Timer  1
   and  then
Send  [illegible]

When DTE  [illegible]
   then  goto  Block   4
When  Timer  1   >   3000
   then  goto  Block   2
Block   4
Message  TEST FOR LOW LCN
   and  then
Reset  Timer  1
   and  then
Start  Timer  1
   and  then
Wait   6000
   and  then
Increment  Counter  1  by   1
   and  then
Increment  Counter  2  by   1
   and  then
Increment  Counter  5  by   1
   and  then
Send  [illegible]

When DTE  [illegible]
   then  goto  Block   5
When DCE  [illegible]
   then  goto  Block   4
When  Timer  1   >   7000
   then  goto  Block   4
```

```
Block   5
Message  WAIT FOR CLR CNF
   and then
Send  1[illegible]

When DTE  1[illegible]
   then goto Block   6
Block   6
Message  TEST FOR HI LCN
   and then
Reset Timer  1
   and then
Start Timer  1
   and then
Wait    6000
   and then
Increment Counter  5  by    1
   and then
Send  1[illegible]

When DTE  1[illegible]
   then goto Block   7
When DCE  1[illegible]
   then goto Block   8
When Timer  1   >    7000
   then goto Block   8
Block   7
Message  WAIT FOR CLR CNF
   and then
Increment Counter  2  by    1
   and then
Send  1[illegible]

If Counter  2   >    4095
   then goto Block   8
When DTE  1[illegible]
   then goto Block   6
```

DCE_LCN1 Listing (Continued)

```
Block   8
Reset  Counter  5
   and  then
Reset  Timer  1
   and  then
Beep

Block   9
Message  TEST COMPLETE
   and  then
Wait    1000
   and  then
Goto  Block   10

Block  10
Message  CHECK COUNTERS
   and  then
Wait    1000
   and  then
Goto  Block    9
```

DTE_LCN2/DCE_LCN2

This test is used to determine one end of the switched virtual circuit LCN range. It is used when the device under test will accept all calls regardless of the LCN.

This is an Emulate menu test (X.25 Level 2 Emulator loaded)

Test Setup

Update the Level 1 Setup menu so that the parameters match device under test.

Update the Level 2 Setup menu parameters with the values determined by DTE_SUBNET or DCE_SUBNET.

To execute this test press **<Run Menu>**, then **<Emulate>**. The test will beep when it completes.

Test Results

The emulator waits 5 seconds for a restart from the device under test. If no restart is received, a SABM is sent and the emulator waits again for a restart from the device under test. If no restart is received, the emulator sends a restart, waits for confirmation, and starts the test.

Enter Examine Data and find the decoded Call Request/Incoming Call packet sent from the device under test to determine the high or low end of the range. If the device under test is the network, the LCN displayed is the low end of the range. If the device under test is the subscriber, the LCN is the high end of the range.

DCE_LCN2 Listing

```
Simulate DCE

Block 1
Message WAIT FOR RESTART
   and then
Reset Timer 1
   and then
Start Timer 1

When DCE 1
   then goto Block 4
When DTE 1
   then goto Block 2
When Timer 1 > 5000
   then goto Block 2
Block 2
Message SABM SENT
   and then
Set Lead CTS On

When DTE 1
   then goto Block 3
Block 3
Message RESTART SENT
   and then
Reset Timer 1
   and then
Start Timer 1
   and then
Send 1

When DTE 1
   then goto Block 4
When Timer 1 > 3000
   then goto Block 2
```

Menu Listings

```
Block    4
Message  WAITING FOR CALL

When  DTE  10669
   then  goto  Block    5
Block    5
Reset  Timer  1
   and  then
Beep

Block    6
Message   TEST COMPLETE
   and  then
Wait     1000
   and  then
Goto  Block    7

Block    7
Message  LCN VALUE ABOVE
   and  then
Wait     1000
   and  then
Goto  Block    6
```

DTE_WINDOW/DCE_WINDOW

This test determines the Level 3 window size of the device under test.

This is an Emulate menu test (X.25 Level 2 Emulator loaded)

Test Setup

Update the Level 1 Setup menu so that the parameters match the device under test.

Update the Level 2 Setup menu parameters with the values determined by DTE_SUBNET or DCE_SUBNET.

Select the switched virtual LCN range in the Level 3 Setup menu.

Enter the device under test's Called/Calling Address in the Call Setup menu's Call #1 field.

This test assumes LCN 1 will be used for the call. If a different LCN is desired for the call, enter the Emulate menu and change the Increment Counter 5 by 1 statement in Block 1 to reflect the desired LCN. For example, if you wish to use LCN 8, change the Increment Counter 5 statement to:

Increment Counter 5 by 8

If facility information is required by the device under test in the Call packet, that information must be entered in the Call packet send string in Block 4 of the Emulate menu. Enter the facilities into the send string in place of 0_0 which follows 0_B.

To execute this test press **<Run Menu>**, then **<Emulate>**.

Test Results

The emulator waits 5 seconds for a restart from the device under test. If no restart is received, a SABM is sent and the emulator waits again for a restart from the device under test. If no restart is received, the emulator sends a restart, waits for confirmation, and starts the test.

When the call is accepted, the message WAITING FOR DATA appears. Data packets must then be repetitively sent to the emulator from the device under test for about 5 seconds. No packet level responses are issued by the emulator so that the device under test will fill its window, The HP 4952A beeps when the test is completed and counter 1 has the Level 3 window size of the device under test.

The message CALL CLEARED appears if the call is not accepted. If this is the case, recheck the Called and Calling addresses, and the Level 1, 2, and 3 Setup parameters.

Send data packets to the emulator for 5 seconds. If more time is needed in order to fill the device under test packet window, enter the Emulate menu and increase the timeout value in the "When Timer 1 statement in Block 5".

DCE_WINDOW Listing

```
Simulate  DCE

Block   1
Message  WAIT FOR RESTART
   and  then
Reset  Counter  5
   and  then
Increment  Counter  5  by        1
   and  then
Reset  Timer  1
   and  then
Start  Timer  1

When  DCE  1 2 2 2 7
   then  goto  Block     4
When  DTE  1 2 2 6 6
   then  goto  Block     2
When  Timer  1    >     5000
   then  goto  Block     2
Block   2
Message   SABM SENT
   and  then
Set  Lead  CTS      On

When  DTE  1 2 2 6 6
   then  goto  Block     3
```

DCE_WINDOW Listing (Continued)

```
Block   3
Message    RESTART SENT
   and then
Reset Timer 1
   and then
Start Timer 1
   and then
Send [illegible]

When DTE [illegible]
   then goto Block   4
When Timer 1   >   5000
   then goto Block   2
Block   4
Message    PLACING CALL
   and then
Reset Timer 1
   and then
Send [illegible]

When DTE [illegible]
   then goto Block   5
When DCE [illegible]
   then goto Block   10
When DTE [illegible]
   then goto Block   11
Block   5
Message  WAITING FOR DATA

When Timer 1   >   5000
   then goto Block   7
When DTE [illegible]
   then goto Block   8
Block   6
Increment Counter 1 by   1
   and then
Reset Timer 1
   and then
Start Timer 1
   and then
Goto Block   5
```

```
Block   7
Send  1231231236 ▶
   and  then
Reset  Timer  1
   and  then
Beep

Block   8
Message  TEST COMPLETE
   and  then
Wait   1000

Block   9
Message CHECK COUNTER 1
   and  then
Wait   1000
   and  then
Goto  Block   8

Block  10
Message   CALL CLEARED
   and  then
Beep
   and  then
Goto  Block  12

Block  11
Message RESET REQ RECVED
   and  then
Beep

Block  12
When  DTE  2
   then  goto  Block  12
```

DTE_CALL_1/DCE_CALL_1

This test allows a call to be placed to the device under test, data to be sent on the LCN that is set up, and the call to be cleared using the softkeys.

This is an Emulate menu test (X.25 Level 2 Emulator loaded)

Test Setup

Update the Level 1 Setup menu so that the parameters match the device under test.

Update the Level 2 Setup menu parameters with the values determined by DTE_SUBNET or DCE_SUBNET.

Enter the device under test's Called/Calling Address into the Call Setup menu, Call #1.

This test assumes LCN 1 will be used for the call. If a different LCN is desired for the call, enter the Emulate menu and change the Increment Counter 5 by 1 statement in Block 1 to reflect the desired LCN. For example if you wish to use LCN 8, change the Increment Counter 5 statement to:

Increment Counter 5 by 8

If facility information is required by the device under test in the Call packet, that information must be entered in the call packet send string in Block 6 of the Emulate menu. Enter the facilities into the send string in place of the 0_0H which follows the 0_BH.

To execute this test press **<Run Menu>**, then **<Emulate>**.

Test Results

The user definable softkeys (3,4,5) will indicate CALL DATA MORE if the device under test sends a SABM to bring up level 2. If the device under test does not send a SABM, the softkeys will read SABM DISC MORE. If the second set of softkeys appear, press SABM to bring up level 2 and press MORE twice and then press RESTART to send a restart request packet.

Pressing MORE twice will display the CALL DATA MORE softkeys.

At this point a call can be placed to the device under test by pressing the CALL softkey. Once the call has been confirmed, data can be transmitted to the device under test using the DATA softkey. The data transmitted has no significance and can be modified to fit any particular need by modifying the send string in Block 7 of the Emulate menu.

The call can be cleared by pressing the MORE key and then CLR.

The softkey tree is as follows:

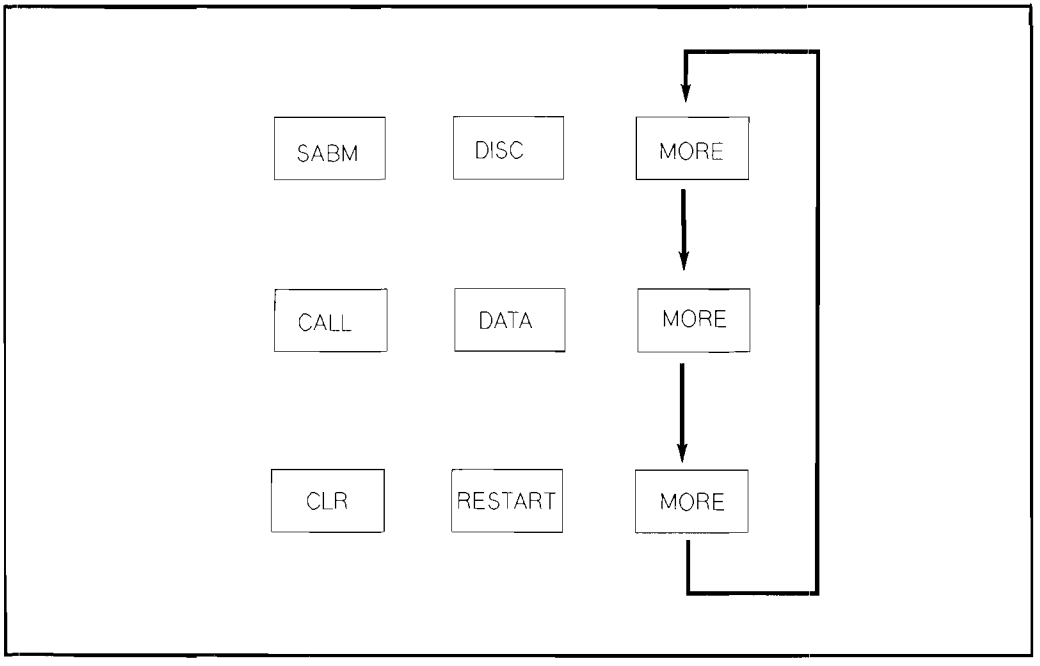

Figure 6-1. DTE_CALL_1/DCE_CALL_1 Softkey Tree

DCE_CALL_1 Listing

```
Simulate DCE

Block 1
Message SABM DISC MORE
  and then
Reset Counter 5
  and then
Increment Counter 5 by 1

When DCE 1
  or
When DCE 1
  then goto Block 5
When Softkey 3
  then goto Block 2
When Softkey 4
  then goto Block 3
When Softkey 5
  then goto Block 5
Block 2
Set Lead CTS On
  and then
Goto Block 4

Block 3
Set Lead CTS Off

Block 4
Message WAITING FOR UA
  and then
Reset Timer 1
  and then
Start Timer 1

When DTE 1
  or
When DCE 1
  then goto Block 5
When Timer 1 > 5000
  then goto Block 1
```

DCE_CALL_1 Listing (Continued)

```
Block   5
Message CALL   DATA   MORE

When Softkey 3
   then goto Block   6
When Softkey 4
   then goto Block   7
When Softkey 5
   then goto Block   8
Block   6
Message   WAIT CALL CONF
   and then
Reset Timer 1
   and then
Start Timer 1
   and then
Send 1[illegible]

When DTE 1[illegible]
   then goto Block   5
When Timer 1   >   5000
   then goto Block   5
Block   7
Send 1[illegible]DCE DATA[illegible]
   and then
Goto Block   5

Block   8
Message CLR RESTART MORE

When Softkey 3
   then goto Block   9
When Softkey 4
   then goto Block  10
When Softkey 5
   then goto Block   1
```

DCE_CALL_1 Listing (Continued)

```
Block   9
Message  WAITING FOR CONF
   and  then
Reset  Timer  1
   and  then
Start  Timer  1
   and  then
Send  1[illegible]

When DTE  1[illegible]
   then  goto  Block   5
When  Timer  1   >   5000
   then  goto  Block   8
Block  10
Message     RESTART SENT
   and  then
Reset  Timer  1
   and  then
Start  Timer  1
   and  then
Send  1[illegible]

When DTE  1[illegible]
   then  goto  Block   5
When  Timer  1   >   5000
   then  goto  Block   1
```

Menu Listings

DTE_CALL_M/DCE_CALL_M

This test allows calls to be placed to the device under test, data to be sent on the multiple LCNs that are set up, and the calls cleared using the softkeys.

This is an Emulate menu test (X.25 Level 2 Emulator loaded)

Test Setup

Update the Level 1 Setup menu so that the parameters match the device under test.

Update the Level 2 Setup menu parameters with the values determined by DTE_SUBNET or DCE_SUBNET.

Enter the device under test's Called/Calling Addresses into the Call Setup menu's Call #1 - Call #6 fields.

This test assumes LCN 1 will be the first one used. If a different LCN is desired for the first call, enter the Emulate menu and change the Increment Counter 5 by 1 statement in Block 1 to reflect the desired LCN. For example if you wish to start with LCN 8, change the Increment Counter 5 statement to:

Increment Counter 5 by 8

If facility information is required by the device under test in the Call packet, that information must be entered in the call packet send string in Block 7 of the Emulate menu. Enter the facilities into the send string in place of the 0_0H which follows the 0_BH.

To execute this test press **<Run Menu>**, then **<Emulate>**.

Test Results

The user definable softkeys (3,4,5) will indicate CALL DATA MORE if the device under test sends a SABM to bring up level 2. If the device under test does not send a SABM, the softkeys will read SABM DISC MORE. If the second set of softkeys appear, press SABM to bring up level 2, press MORE twice, and then press RESTART to send a Restart Request packet. Pressing MORE twice will display the CALL DATA MORE softkeys.

At this point a call can be placed to the device under test by pressing the CALL softkey. Once the call has been confirmed, data can be transmitted to the device under test using the DATA softkey. The data transmitted has no significance and can be modified to fit any particular need by modifying the send string in Block 8 of the Emulate menu.

The call can be cleared by pressing the MORE key, and then CLR.

To send a call on another LCN, press the MORE softkey until the INC/DEC LCN MORE softkeys appear. Press softkey 3 to increment the LCN, softkey 4 to decrement the LCN. Any calls, data packets or clear packets will be transmitted on the new LCN.

The softkey tree is as follows:

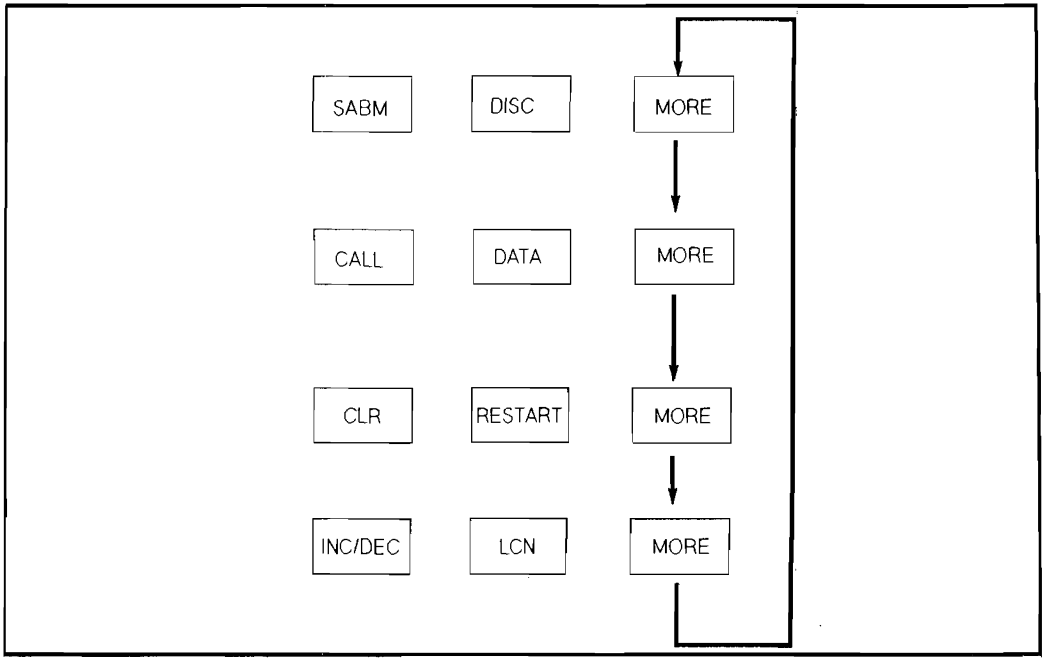

Figure 6-2. DTE_CALL_M/DCE_CALL_M Softkey Tree

DCE_CALL_M Listing

```
Simulate DCE

Block 1
Reset Counter 5
  and then
Increment Counter 5 by 1

Block 2
Message SABM DISC MORE

When DCE 1 X ? ? X F
  or
When DCE 1 X ? G G F
  then goto Block 6
When Softkey 3
  then goto Block 3
When Softkey 4
  then goto Block 4
When Softkey 5
  then goto Block 6
Block 3
Set Lead CTS On
  and then
Goto Block 5

Block 4
Set Lead CTS Off

Block 5
Message WAITING FOR UA
  and then
Reset Timer 1
  and then
Start Timer 1
```

DCE_CALL_M Listing (Continued)

```
When DTE 1XXGG
   or
When DCE 1XXGG
   then goto Block 6
When Timer 1 > 5000
   then goto Block 2
Block 6
Message CALL DATA MORE

When Softkey 3
   then goto Block 7
When Softkey 4
   then goto Block 8
When Softkey 5
   then goto Block 9
Block 7
Message WAIT CALL CONF
   and then
Reset Timer 1
   and then
Start Timer 1
   and then
Send 1XXXXXXXXXXXGG

When DTE 1XXXXX
   then goto Block 6
When Timer 1 > 5000
   then goto Block 6
Block 8
Send 1XXXXXDCE DATA44GG
   and then
Goto Block 6
```

```
Block  9
Message  CLR RESTART MORE

When Softkey 3
   then goto Block  10
When Softkey 4
   then goto Block  11
When Softkey 5
   then goto Block  12
Block 10
Message  WAITING FOR CONF
   and then
Reset Timer 1
   and then
Start Timer 1
   and then
Send  1[illegible]

When DTE  1[illegible]
   then goto Block  6
When Timer 1  >  5000
   then goto Block  9
Block 11
Message  RESTART SENT
   and then
Reset Timer 1
   and then
Start Timer 1
   and then
Send  1[illegible]

When DTE  1[illegible]
   then goto Block  6
When Timer 1  >  5000
   then goto Block  2
```

DCE_CALL_M Listing (Continued)

```
Block 12
Message INC/DEC LCN MORE

When Softkey 3
   then goto Block 13
When Softkey 4
   then goto Block 14
When Softkey 5
   then goto Block 2
Block 13
Message
   and then
Reset Timer 1
   and then
Start Timer 1
   and then
Increment Counter 5 by 1

When Timer 1 > 75
   then goto Block 12
Block 14
Message
   and then
Reset Timer 1
   and then
Start Timer 1
   and then
Increment Counter 5 by 65535

When Timer 1 > 75
   then goto Block 12
```

DTE_FACIL/DCE_FACIL

This test is an example of tests that can be used to determine if particular facilities are supported by the device under test. In this example two calls are placed to the device under test. The first call requests reverse charging, the second call requests fast select.

This is an Emulate menu test (X.25 Level 2 Emulator loaded)

Test Setup

Update the Level 1 Setup menu so that the parameters match the device under test.

Update the Level 2 Setup menu parameters with the values determined by DTE_SUBNET or DCE_SUBNET.

Select the switched virtual LCN range in the Level 3 Setup menu.

Enter the device under test's Called/Calling Address into the Call Setup menu's Call #1 field.

This test assumes LCN 1 will be used for the call. If a different LCN is desired for the call, enter the Emulate menu and change the Increment Counter 5 by 1 statement in Block 1 to reflect the desired LCN. For example, if you wish to use LCN 8, change the Increment Counter 5 statement to:

Increment Counter 5 by 8

If different facility information is required by the device under test in the Call packet, that information must be entered in the call packet send strings in Block 5 and 7 of the Emulate menu. Enter the facilities into the send string following the 0_BH.

To execute this test press **<Run Menu>**, then **<Emulate>**. The test beeps when it is completed.

Test Results

The emulator waits 5 seconds for a restart from the device under test. If no restart is received, a SABM is sent and the emulator waits again for a restart from the device under test. If no restart is received, the emulator sends a restart, waits for confirmation, and starts the test.

Two calls are then placed to the device under test. The first call requests reverse charging, the second call requests fast select.

The HP 4952A beeps when the test completes. Counter 1 will be 1 if reverse charging is available; Counter 2 will be 1 if fast select is available. Some devices require all supported facilities to be included in the call packet. If this is the case the facilities field of the two call packets will need to be modified to include all necessary facilities.

The message line at the bottom of the display will give messages indicating the progress of the test.

DCE_FACIL Listing

```
Simulate DCE

Block  1
Reset  Counter 1
   and  then
Reset  Counter 2

Block  2
Message WAIT FOR RESTART
   and  then
Reset  Timer 1
   and  then
Start  Timer 1

When DCE 1XXXX
   then goto Block  5
When DTE 1XXGG
   then goto Block  3
When Timer 1   >  5000
   then goto Block  3
Block  3
Message      SABM SENT
   and  then
Set Lead CTS      On

When DTE 1XXGG
   then goto Block  4
```

```
Block    4
Message    RESTART SENT
   and  then
Reset  Timer  1
   and  then
Start  Timer  1
   and  then
 Send  1[illegible]

When  DTE  1[illegible]
   then  goto  Block    5
When  Timer  1    >    5000
   then  goto  Block    3
Block    5
Message    PLACING CALL
   and  then
Reset  Timer  1
   and  then
Send  1[illegible]

When  DTE  1[illegible]
   then  goto  Block    6
When  DCE  1[illegible]
   then  goto  Block    7
Block    6
Message    CLEARING CALL
   and  then
Increment  Counter  1  by    1
   and  then
Send  1[illegible]

When  DTE  1[illegible]
   then  goto  Block    7
Block    7
Message    PLACING CALL
   and  then
Wait    500
   and  then
Send  1[illegible]
```

DCE_FACIL Listing (Continued)

```
When DTE [illegible]
   then goto Block  8
When DCE [illegible]
   then goto Block  9
Block  8
Message  CLEARING CALL
   and then
Increment Counter 2 by  1
   and then
Send [illegible]

When DTE [illegible]
   then goto Block  9
Block  9
Beep

Block 10
Message  TEST COMPLETE
   and then
Reset Timer 1
   and then
Start Timer 1

When Timer 1  >  1000
   then goto Block  11
Block 11
Message  CHECK COUNTERS
   and then
Reset Timer 1
   and then
Start Timer 1

When Timer 1  >  1000
   then goto Block  10
```

MON_TEST

This test is used as a final check prior to installation. The line between the network and installed equipment is monitored for 240 seconds to determine if all the leads are up, if level 2 has come up and if a Restart Request/Restart Confirmation has occurred.

This is a Monitor menu test

Test Setup

Update the Level 1 Setup menu so that the parameters match the device under test.

To execute this test press **<Run Menu>**, then **<Monitor Line>**. The test beeps when it is completed.

Test Results

One of the following messages will appear:

NO SABMS SENT

Indicates that neither device has tried to bring up level 2 by sending a SABM.

NO RESTARTS SENT

Indicates that a SABM/UA exchange has taken place but no Restart Request/Restart Confirmation exchange occurred.

SAME LINK ADDRS

Indicates both devices are using the same link level addresses.

DSR IS OFF

Indicates the DCE is not driving the DSR lead on.

DTR IS OFF

Indicates the DTE is not driving the DTR lead on.

RTS IS OFF

Indicates the DTE is not driving the RTS lead on.

CTS IS OFF

Indicates the DCE is not driving the CTS lead on.

CD IS OFF

Indicates the DCE is not driving the CD lead on.

CALL ACCEPTED

Indicates that a call was requested and accepted.

CALL CLEARED

Indicates that a call Request/Incoming call packet was transmitted by one of the devices but the call was not accepted. The calling device may be using the wrong called address or there may be a facilities compatibility problem between the two devices.

LEVEL 2 PROBLEM

One of the devices sent over 10 SABMs trying to bring up Level 2 but no UA was received from the other device, or a FRMR was sent by one of the devices.

TEST COMPLETE

No calls were requested during the time of the test but a SABM/UA exchange and a Restart Request/Restart Confirmation exchange both occurred.

MON_TEST Listing

```
Monitor

Block   1
Message   CHECK LEADS

If Lead DSR   is Off
   then goto Block   14
If Lead DTR   is Off
   then goto Block   15
If Lead RTS   is Off
   then goto Block   16
If Lead CTS   is Off
   then goto Block   17
If Lead CD    is Off
   then goto Block   18
Block   2
Message WAITING FOR RRs
   and then
Reset Timer 1
   and then
Reset Timer 2
   and then
Reset Timer 3
   and then
Reset Timer 4
   and then
Start Timer 1
   and then
Reset Counter 1
   and then
Reset Counter 2
   and then
Reset Counter 3
   and then
Reset Counter 4
   and then
Reset Counter 5
```

```
Block   3
When  DTE [illegible]
   or
When  DTE [illegible]
   then goto  Block   4
When  DCE [illegible]
   or
When  DCE [illegible]
   then goto  Block   5
When  DTE [illegible]
   or
When  DTE [illegible]
   or
When  DCE [illegible]
   then goto  Block   5
When  DTE [illegible]
   or
When  DTE [illegible]
   then goto  Block   6
When  DCE [illegible]
   or
When  DCE [illegible]
   then goto  Block   7
When  DTE [illegible]
   or
When  DCE [illegible]
   then goto  Block   9
When  DTE [illegible]
   or
When  DCE [illegible]
   then goto  Block   8
When  DTE [illegible]
   or
When  DCE [illegible]
```

MON_TEST Listing (Continued)

```
When DTE 4GG
   or
When DCE 4GG
   then goto Block 21
When DTE 1XXGG
   or
When DCE 1XXGG
   then goto Block 19
Block 4
Message DTE SABM, ADD=1
   and then
Increment Counter 1 by 1

If Counter 2 > 0
   then goto Block 13
If Counter 1 > 10
   then goto Block 20
If Counter 1 > 0
   then goto Block 3
Block 5
Message DCE SABM, ADD=1
   and then
Increment Counter 2 by 1

If Counter 1 > 0
   then goto Block 13
If Counter 3 > 10
   then goto Block 20
If Counter 3 > 0
   then goto Block 3
Block 7
Message DCE SABM, ADD=3
   and then
Increment Counter 4 by 1

If Counter 3 > 0
   then goto Block 13
If Counter 4 > 10
   then goto Block 20
If Counter 4 > 0
   then goto Block 3
```

```
Block  8
Message WAITING_FOR_CALL
  and then
Increment Counter 5 by     1
  and then
Goto Block    3

Block  9
Message WAITING FOR CALL
  and then
Increment Counter 5 by     1
  and then
Goto Block    3

Block 10
Message    CHECK SABMS

If Counter 5   >       0
  then goto Block  21
If Counter 1   >       0
  then goto Block  12
If Counter 2   >       0
  then goto Block  12
If Counter 3   >       0
  then goto Block  12
If Counter 4   >       0
  then goto Block  12
If Counter 1   >       0
  then goto Block  12
Block 11
Message   NO SABMS SENT
  and then
Beep
  and then
Goto Block   22
```

```
Block 12
Message NO RESTARTS SENT
   and then
Beep
   and then
Goto Block 22

Block 13
Message SAME LINK ADDRS
   and then
Beep
   and then
Goto Block 22

Block 14
Message DSR IS OFF

When Lead DSR goes On
   then goto Block 2
Block 15
Message DTR IS OFF

When Lead DTR goes On
   then goto Block 2
Block 16
Message RTS IS OFF

When Lead RTS goes On
   then goto Block 2
Block 17
Message CTS IS OFF

When Lead CTS goes On
   then goto Block 2
Block 18
Message CD IS OFF

When Lead CD goes On
   then goto Block 2
```

MON_TEST Listing (Continued)

```
Block 19
Message   CALL CLEARED
   and then
Beep
   and then
Goto Block  22

Block 20
Message LEVEL 2 PROBLEM
   and then
Beep
   and then
Goto Block  22

Block 21
Message   TEST PASSED
   and then
Beep

Block 22
When DTE ☒
   then goto Block  22
```

Index

a

b

c

d

e

f

g

h

i

l

m

n

o

p

q

r

s

t

u

v

w

X

Softkeys

Please send directory corrections to:
Test & Measurement Catalog
Hewlett-Packard Company
3200 Hillview Avenue
Palo Alto, CA 94304
Tel: (415) 857-4706
Fax: (415) 857-3880

HEADQUARTERS OFFICES

If there is no sales office listed for your area, contact one of these headquarters offices.

ASIA
Hewlett-Packard Asia Ltd.
22/F Bond Centre, West Tower
89 Queensway, Central
HONG KONG
G.P.O. Box 863, Hong Kong
Tel: 5-8487777
Telex: 76793 HPA HX
Cable: HPASIAL TD

CANADA
Hewlett-Packard (Canada) Ltd.
6877 Goreway Drive
MISSISSAUGA, Ontario L4V 1M8
Tel: (416) 678-9430
Fax: (416) 678-9421

EASTERN EUROPE
Hewlett-Packard Ges.m.b.h.
Lieblgasse 1
P.O. Box 72
A-1222 **VIENNA,** Austria
Tel: (222) 2500
Telex: 1 3 4425 HEPA A

NORTHERN EUROPE
Hewlett-Packard S.A.
V. D. Hooplaan 241
P.O. Box 999
NL-118 LN 15 **AMSTELVEEN**
The Netherlands
Tel: 20 5479999
Telex: 18919 hpner

SOUTH EAST EUROPE
Hewlett-Packard S.A.
World Trade Center
110 Avenue Louis-Casai
1215 Cointrin, **GENEVA,** Switzerland
Tel: (022) 98 96 51
Telex: 27225 hpser
Mail Address:
P.O. Box
CH-1217 Meyrin 1
GENEVA
Switzerland

MIDDLE EAST AND CENTRAL AFRICA
Hewlett-Packard S.A.
International Sales Branch
Middle East/Africa
7, rue du Bois-du-Lan
P.O. Box 364
CH-1217 Meyrin 1
GENEVA
Switzerland
Tel: (41/22) 780 7111
Fax: 783 7535

European Operations
Hewlett-Packard S.A.
150, Route du Nant d'Avril
1217 Meyrin 2
GENEVA, Switzerland
Tel: (41/22) 780 .8111
Fax: (41/22) 780 .8542

UNITED KINGDOM
Hewlett-Packard Ltd.
Nine Mile Ride
WOKINGHAM
Berkshire, RG113LL
Tel: 0344 773100
Fax: (44/344) 763526

UNITED STATES OF AMERICA
Customer Information Center
(800) 752-0900
6:00 AM to 5:00 PM Pacific Time

EASTERN USA
Hewlett-Packard Co.
4 Choke Cherry Road
ROCKVILLE, MD 20850
Tel: (301) 670-4300

MIDWESTERN USA
Hewlett-Packard Co.
5201 Tollview Drive
ROLLING MEADOWS, IL 60008
Tel: (312) 255-9800

SOUTHERN USA
Hewlett-Packard Co.
2015 South Park Place
ATLANTA, GA 30339
Tel: (404) 955-1500

WESTERN USA
Hewlett-Packard Co.
5161 Lankershim Blvd.
NORTH HOLLYWOOD, CA 91601
Tel: (818) 505-5600

OTHER INTERNATIONAL AREAS
Hewlett-Packard Co.
Intercontinental Headquarters
3495 Deer Creek Road
PALO ALTO, CA 94304
Tel: (415) 857-5027
Telex: 034-8300
Cable: HEWPACK

Hewlett-Packard Trading S.A.
Bureau de Liaison/Bureau de Spport
Villa des Lions
9, Hai Galloul
DZ-BORDJ EL BAHRI
Tel: 76 02 07
Fax: 281 0367

ANGOLA
Telectra Angola LDA
Empresa Técnica de Equipamentos
16 rue Cons. Julio de Vilhema
LUANDA
Tel: 35515,35516
Telex: 3134

ARGENTINA
Hewlett-Packard Argentina S.A.
Montaneses 2140/50
1428 **BUENOS AIRES**
Tel: (54/1) 781 4059
(54/1) 781-4090

Laboratorio Rodriguez
Corswant S.R.L.
Misiones, 1156 - 1876
Bernal, Oeste
BUENOS AIRES
Tel: 252-3958, 252-4991

Argentina Esanco S.R.L.
A/ASCO 2328
1416 **BUENOS AIRES**
Tel: 541-58-1981, 541-59-2767
Telex: 22796 HEW PAC-AR

AUSTRALIA
Customer Information Centre
Tel: (008) 033821

Adelaide, South Australia Office
Hewlett-Packard Australia Ltd.
PARKSIDE, S.A. 5063
153 Greenhill Road
ADELAIDE (Parkside) Sales
Tel: (61-8-) 272-5911
Fax: (61/8) 373-1398

Brisbane, Queensland Office
Hewlett-Packard Australia Ltd.
10 Payne Road
THE GAP, Queensland 4061
Tel: 61-7-300-4133
Telex: 42133
Cable: HEWPARD Brisbane

Canberra, Australia Capital Territory Office
Hewlett-Packard Australia Ltd.
Thynne Street, Fern Hill Park
BRUCE, A.C.T. 2617
P.O. Box 257,
JAMISON, A.C.T. 2614
Tel: 61-62-51-6999
Telex: 62650
Cable: HEWPARD Canberra

Melbourne, Victoria Office
Hewlett-Packard Australia Ltd.
31-41 Joseph Street
P.O. Box 221
BLACKBURN, Victoria 3130
Tel: (61/3) 895-2895
Fax: (61/3) 898-7831
Cable: HEWPARD Melbourne

Perth, Western Australia Office
Hewlett-Packard Australia Ltd.
Herdsman Business Park
Cnr. Hasler & Gould Strs.
Osborne Park
CLAREMONT, W.A. 6017
Tel: (61/9) 242 1414
Fax: (61/9) 242-1682
Cable: HEWPARD Perth

Sydney, New South Wales Office
Hewlett-Packard Australia Ltd.
17-23 Talavera Road
P.O. Box 308
NORTH RYDE, N.S.W. 2113
Sydney, Australia
Tel: (61/2) 888-4444
Fax: (61/2) 888-9072
Cable: HEWPARD Sydney

AUSTRIA
Hewlett-Packard GmbH
Verkaufsbuero Graz
Grottenhofstrasse 94
A-8052 **GRAZ**
Tel: 43-316-291-5660
Telex: 312375

Hewlett-Packard GmbH
Lieblgasse 1
P.O. Box 72
A-1222 **VIENNA**
Tel: (43/222) 2500
Fax: (48/222) 2500 Ext 444

BAHRAIN
Modern Electronic
Establishment
Hewlett-Packard Division
P.O. Box 22015
RIYADH 11495
SAUDI ARABIA
Tel: (966/1) 4763030
Telex: 595 (0495) 202049

Wael Pharmacy
P.O. Box 648
MANAMA
Tel: 256123
Telex: 8550 WAEL BN

BELGIUM
Hewlett-Packard Belgium S.A./N.V.
Blvd de la Woluwe, 100
Woluwedal
1200 **BRUSSELS**
Tel: (32/2) 761.31.11
Fax: (32/2) 763.06.13

BENIN
S.I.T.E.L.
Immeuble le General
Av. General de Gaulle
P.O. Box 161
ABIDJAN 01
Ivory Coast
Tel: 32 12 27
Telex: 22149

BERMUDA
Applied Computer Technologies
Atlantic House Building
P.O. Box HM 2091
Par-La-Ville Road
HAMILTON 5
Tel: 295-1616
Telex: 380 3589/ACT BA

BOLIVIA
Arrellano Ltda
Av. 20 de Octubre #2125
Casilla 1383
LA PAZ
Tel: 368541

Siser Ltda. (Sistemas de
Importacion y Servicios Ltda.)
Gabriel Gozalvez 221
Casilla 4084
LA PAZ
Tel: (591/2) 340962/
363365/343245
Fax: 35-9268

BRAZIL
Hewlett-Packard do Brasil S.A.
Praia de Botafago 228-A-614
6. AND.-CONJ. 601
Edificio Argentina - Ala A
22250 **RIO DE JANEIRO, RJ**
Tel: (55/21) 552-6422
Telex: 21905 HPBR BR
Cable: HEWPACK Rio de Janeiro

BRUNEI
Komputer Wisman Sdn Bhd
G6, Chandrawaseh Cmplx,
Jalan Tutong
P.O. Box 1297,
BANDAR SERI BEGAWAN
NEGARA BRUNI DARUSSALAM
Tel: 673-2-2000-70/26711

BURKINA FASSO
S.I.T.E.L.
Immeuble le General
Avenue General de Gaulle
P.O. Box 161
ABIDJAN 01
Ivory Coast
Tel: 32 12 27
Telex: 22149

CAMEROON
R.T.I.
175 Rue Blomet
75015 **PARIS**
France
Tel: (1) 45 31 0906
Telex: 203376
Fax: (1) 45 31 09 18

CANADA

Alberta
Hewlett-Packard (Canada) Ltd.
3030 3rd Avenue N.E.
CALGARY, Alberta T2A 6T7
Tel: (1/403) 235-3100
Fax: (1/403) 272-2299

Hewlett-Packard (Canada) Ltd.
11120-178th Street
EDMONTON, Alberta T5S 1P2
Tel: (1/403) 486-6666
Fax: (1/403) 489-8764

SALES OFFICES
Arranged alphabetically by country (cont'd)

CANADA (Cont'd)

British Columbia
Hewlett-Packard (Canada) Ltd.
10691 Shellbridge Way
RICHMOND,
British Columbia V6X 2W8
Tel: (1/604) 270-2277
Fax: (1/604) 270-0859

Manitoba
Hewlett-Packard (Canada) Ltd.
1825 Inkster Blvd.
WINNIPEG, Manitoba R2X 1R3
Tel: (204) 694-2777

New Brunswick
Hewlett-Packard (Canada) Ltd.
814 Main Street
MONCTON, New Brunswick E1C 1E6
Tel: (506) 855-2841

Nova Scotia
Hewlett-Packard (Canada) Ltd.
201 Brownlow Avenue
DARTMOUTH, Nova Scotia B3B 1W2
Tel: (1/902) 469-7820
Fax: (1/902) 468-2817

Hewlett-Packard
(Canada) Ltd.
475 Hood Rd., Unit #2
MARKHAM, L3R 8H1
Tel: (416) 479-1770

Ontario
Hewlett-Packard (Canada) Ltd.
552 Newbold Street
LONDON, Ontario N6E 2S5
Tel: (1/519) 686-9181
Fax: (1/519) 686-9145

Hewlett-Packard (Canada) Ltd.
6877 Goreway Drive
MISSISSAUGA, Ontario L4V 1M8
Tel: (1/416) 678-9430
Fax: (1/416) 673-7253

Hewlett-Packard (Canada) Ltd.
2670 Queensview Dr.
OTTAWA, Ontario K2B 8K1
Tel: (1/613) 820-6483
Fax: (1/613) 820-0377

Hewlett-Packard (Canada) Ltd.
3790 Victoria Park Ave.
WILLOWDALE, Ontario M2H 3H7
Tel: (1/416) 499-2550

Quebec
Hewlett-Packard (Canada) Ltd.
17500 Trans Canada Highway
South Service Road
KIRKLAND, Quebec H9J 2X8
Tel: (1/514) 697-4232
Fax: (1/514) 697-6941

Saskatchewan
Hewlett-Packard (Canada) Ltd.
#1, 2175 Airport Rd.
SASKATOON, Saskatchewan S7L 7E1
Tel: (306) 242-3702

CHILE
Ricardo Borzutsky
Avanzados Sistemas de
Conocimientos S. A.
Austria 2041
SANTIAGO
America del Sur
Tel: (562) 223-5946/6148

CHINA, People's Republic of
China Hewlett-Packard Co., Ltd.
22/F Bond Centre, West Tower
89 Queensway, Central
HONG KONG
Tel: (852/5) 8487777
Fax: (852/5) 868 4997

China Hewlett-Packard Co., Ltd.
P.O. Box 9610, Beijing
38 Bei San Huan X1 Road
Shuang Yu Shu, Hai Dian District
BEIJING
Tel: 256-6888
Fax: 256-3207

China Hewlett-Packard Co., Ltd.
23/F Shanghai Union Building
100 Yan An Road
SHANG-HAI
Tel: 203-240
Fax: 202-149

COLOMBIA
Instrumentación
H. A. Langebaek & Kier S.A.
Carrerra 4A No. 52A-26
Apartado Aereo 6287
BOGOTA 1, D.E.
Tel: 212-1466
Telex: 44400 INST CO
Cable: AARIS Bogota

CONGO
Sema-Metra
16-18 Rue Barbes
92126 Montrouge Cedex
FRANCE
Tel: (1) 657/300
Telex: 200601 Semetra
Fax: (1) 46 56 96 53

COSTA RICA
Cientifica Costarricense S.A.
Avenida 2, Calle 5
San Pedro de Montes de Oca
Apartado 10159
SAN JOSE
Tel: 9-011-506-243-820
Telex: 3032367 GALGUR CR

Continex S.A.
Avenida 10C
Apartado 746-1000
34-36 **SAN JOSE**
Tel: (506) 33-0933
Telex: 2310 Continex CR
Fax: 21-6905

O. Fischel R. Y. Cia. S.A.
Apartados 434-10174
SAN JOSE
Tel: 23-72-44
Telex: 2379
Cable: OFIR

CYPRUS
Hellamco - M. Cotoyannis
2, Sikelianou St. & Kifissias Av.
P.O. Box 65074
N. Psyhiko 15410
ATHENS
Greece
Tel: 647 79 426, 647 79 427
Telex: 224903

Telerexa Ltd.
P.O. Box 1152
Valentine House
8 Stassandrou St.
NICOSIA
Tel: 45 628, 62 698
Telex: 5845 tlrx cy

DEMSTAR Ltd.
P.O. Box 2260
NICOSIA
Cyprus
Tel: 44 10 64
Telex: 3085
Fax: 46 46 35

DENMARK
Hewlett-Packard A/S
Kongevejen 25
3460 **BIRKEROD**
Tel: (45/42) 816640
Fax: (45/42) 815810

Hewlett-Packard A/S
Rolighedsvej 32
DK-8240 **RISSKOV,** Aarhus
Tel: 45-06-17-6000
Telex: 37409 hpas dk

DOMINICAN REPUBLIC
Microprog S.A.
Juan Tomás Mejia y Cotes No. 60
Arroyo Hondo
SANTO DOMINGO
Tel: 565-6268
Telex: 4510 ARENTA DR (RCA)

ECUADOR
CYEDE Cia. Ltda.
Avenida Eloy Alfaro 1749
y Belgica
Casilla 6423 CCI
QUITO
Tel: 9-011-593-2-450975
Telex: 39322548 CYEDE ED

EGYPT
International Engineering Associates
6 El Gamea Street
Agouza
CAIRO
Tel: 71-21-681 348 0904
Telex: 93830 IEA UN
Cable: INTEGASSO

EL SALVADOR
IPESA de El Salvador S.A.
29 Avenida Norte 1223
SAN SALVADOR
Tel: 9-011-503-266-858
Telex: 301 20539 IPESA SAL

ETHIOPIA
R.T.I.
175 rue Blomet
75016 **PARIS**
France
Tel: (1) 45 31 09 06
Telex: 203376
Fax: (1) 45 31 09 18

FINLAND
Hewlett-Packard Finland
Field Oy
Niittylanpolku IO
00620 **HELSINKI**
Tel: (90) 757-1011
Telex: 122022 Field SF

Hewlett-Packard Oy
Piispankalliontie 17
02200 **ESPOO**
Tel: (358/0) 88721
Fax: (358/0) 887 2277

Hewlett-Packard Oy
Väinönkatu 9 C
40100 **JYVÄSKYLÄ**
Tel: (358/41) 21 85 11

Hewlett-Packard Oy
Valtatie 57
90500 **OULU**
Tel: (358/81) 340 144

FRANCE
Hewlett-Packard France
Z.I. Mercure B
Rue Berthelot
13763 Les Milles Cedex
AIX-EN-PROVENCE
Tel: 33-42-59-41-02
Telex: 410770F

Hewlett-Packard France
ZA Kergaradec
Rue Fernand Forest
29239 **GOUEESNOU** (Brest)
Tel: (98) 41-87-90

Hewlett-Packard France
Chemin des Mouilles
Boite Postale 162
69131 **ECULLY** Cedex (Lyon)
Tel: (33) 72-29-32-93
Telex: 310617F

Hewlett-Packard France
Z.I. Mercure B
Rue Berthelot
F-13763 **LES MILLES** Cédex
Aix-en-Provence
Tel: (33/42) 59-41-02
Telex: 410770
Fax: 594872

Hewlett-Packard France
Parc Club des Tanneries
Batiment B4
4, Rue de la Faisanderie
67381/**LINGOLSHEIM** (Strasbourg)
Tel: (88) 76-15-00
Telex: 890141F

Hewlett-Packard France
Parc d'activités Cadéra
Quartier Jean-Mermoz
Avenue du Président JF Kennedy
33700 **MÉRIGNAC** (Bordeaux)
Tel: (33) 56-34-00-84
Telex: 550105F

Hewlett-Packard France
Miniparc-ZIRST
Chemin du Vieux Chêne
38240 **MEYLAN** (Grenoble)
Tel: (76) 90-38-40

Hewlett-Packard France
Ru de l'Hôtellerie
Le Petit Bel Air
44470 **CARQUEFOU** (Nantes)
Tel: 40-30-38-38
Telex: 711085F

Hewlett-Packard France
Parc Tertiaire Héliopolis
Route de Micy
45380 **La CHAPELLE ST MESMIN**
(Orléans)
Tel: 38-43-93-56
Telex: 783 497F

Hewlett-Packard France
Zone Industrielle de Courtaboeuf
1, av. du Canada
91947 **LES ULIS** Cedex (Orsay)
Tel: 69-82-60-60
Telex: 600048F

R.T.I. (Realisations
Telematiques Internationales)
175, rue Blomet
F-75015 **PARIS**
Tel: (33/1) 45310906
Telex: 42/203376

Hewlett-Packard France
Parc d'activités de la Poterie
Rue Louis Kerautel-Botmel
35000 **RENNES**
Tel: 99-51-42-44
Telex: 740912F

Hewlett-Packard France
45, rue des 3 Soeurs
Centre d'Affaires Paris Nord II
F-93420 Villepinte
B.P. 60020
F-95971 **ROISSY**
CHARLES DE GAULLE Cédex
Tel: (33/48) 91-68-00
Telex: 232366
Fax: 632183

Hewlett-Packard France
P.A.T. Lavatine
3, rue Jacques Monod
BP 185
76136 **MONT-ST-AIGNAN** (Rouen)
Tel: 35-59-19-20
Telex: 770035F

Hewlett-Packard France
Innoparc
BP 167 - Voie n°7
31328 **LABEGE** Cedex (T[illegible]ouse)
Tel: 61-39-11-40
Telex: 531639F

Hewlett-Packard France
Les Cardoulines
Batiment B2
Route des Dolines
Parc d'activite de Valbonne
Sophia Antipolis
06560 **VALBONNE** (Nice)
Tel: 93-65-39-40

Hewlett-Packard France
Parc d'activité des Prés
1, Rue Papin Cedex
59658 **VILLENEUVE D'ASCQ**
Tel: 20-91-41-25
Telex: 160124F

FRENCH WEST INDIES (Antilles)

R.T.I.
175, Rue Blomet
75015 **PARIS**
FRANCE
Tel: (1) 45 31 09 06
Telex: 203376
Fax: (1) 45 31 09 18

GABON

R.T.I. Cameroon
Distribution/Services
B.P. 3899
OOULA, CAMEROON
(Please contact R.T.I. France.)
Tel: (237) 423291
Telex: 970/5385

R.T.I.
175, rue Blomet
75015 **PARIS**
France
Tel: (1) 45 31 09 06
Telex: 203376
Fax: (1) 45 31 09 18

GERMAN FEDERAL REPUBLIC

Hewlett-Packard GmbH
Vertriebzentrale Deutschland
Hewlett-Packard-Strasse
Postfach 1641
D-6380 **BAD HOMBURG v.d.H**
Tel: (06172) 400-0
Telex: 410 844 hpbhg

Hewlett-Packard GmbH
Geschäftsstelle
Keilhstrasse 2-4
D-1000 **BERLIN** 30
Tel: (030) 21 99 04-0
Telex: 018 3405 hpbln d

Hewlett-Packard GmbH
Verbindungsstelle Bonn
Friedrich-Ebert-Allee 26
5300 **BONN**
Tel: (0228) 234001
Telex: 8869421

Hewlett-Packard GmbH
Vertriebszentrun Südwest
Schickardstrasse 2
D-7030 **BÖBLINGEN**
Postfach 1427
Tel: (49/7031) 645
Fax: (49/7031) 645-429

Hewlett-Packard GmbH
Zeneralbereich Mktg
Herrenberger Strasse 130
D-7030 **BÖBLINGEN**
Tel: (49/7031) 14-0
Fax: (49/7031) 14-2999

Hewlett-Packard GmbH
Geschäftsstelle
Schleefstr. 28a
D-4600 **DORTMUND-41**
Tel: (0231) 45001
Telex: 822858 hepdod

Hewlett-Packard gmbH
Reparaturzentrum Frankfurt
Berner Strasse 117
6000 **FRANKFURT/MAIN 60**
Tel: (069) 500001-0
Telex: 413249 hpffm

Hewlett-Packard GmbH
Vertriebszentrum Nord
Kapstadtring 5
D-2000 **HAMBURG** 60
Tel: 49-40-63-804-0
Telex: 021 63 032 hphh d

Hewlett-Packard GmbH
Geschäftsstelle
Heidering 37-39
D-3000 **HANNOVER** 61
Tel: (49/511) 5706-0
Fax: (49/511) 5706-126

Hewlett-Packard GmbH
Geschäftsstelle
Rosslauer Weg 2-4
D-6800 **MANNHEIM**
Tel: 49-0621-70-05-0
Telex: 0462105 hpmhm

Hewlett-Packard GmbH
Geschäftsstelle
Messerschmittstrasse 7
D-7910 **NEU ULM**
Tel: 49-0731-70-73-0
Telex: 0712816 HP ULM-D

Hewlett-Packard GmbH
Geschäftsstelle
Emmericher Strasse 13
D-8500 **NÜRNBERG** 10
Tel: (0911) 5205-0
Telex: 0623 860 hpnbg

Hewlett-Packard GmbH
Vertriebszentrum Ratingen
Berliner Strasse 111
D-4030 **RATINGEN**
Postfach 31 12
Tel: (02102) 494-0
Telex: 589 070 hprad

Hewlett-Packard GmbH
Vertriebszentrum Muchen
Eschenstrasse 5
D-8028 **TAUFKIRCHEN**
Tel: 49-89-61-2070
Telex: 0524985 hpmch

Hewlett-Packard GmbH
Geschäftsstelle
Ermlisallee
7517 **WALDBRONN 2**
Postfach 1251
Tel: (07243) 602-0
Telex: 782 838 hepk

GREAT BRITAIN

See United Kingdom

GREECE

Hewlett-Packard Hellas
32, Kiftissias Avenue
15125 Amaroussion
ATHENS
Greece
Tel: 6828811
Telex: 218588 hpat gr
Fax: 6832978

GUATEMALA

IPESA DE GUATEMALA
Avenida Reforma 3-48, Zona 9
GUATEMALA CITY
Tel: 316627, 317853,66471/5
9-011-502-2-316627
Telex: 3055765 IPESA GU

GUINEA

R.T.I.
175, Rue Blomet
75015 **PARIS**
France
Tel: (1) 45 31 09 06
Telex: 203376
Fax: (1) 45 31 09 18

HONG KONG

Hewlett-Packard Asia, Ltd.
22/F, West Tower Bond Centre
89 Queensway Central
HONG KONG
Tel: (852/5) 848-7777
Fax: (85215) 868-4997
Cable: HEWPACK HONG KONG

ICELAND

Hewlett-Packard Iceland
Hoefdabakka 9
112 **REYKJAVIK**
Tel: 354-1-67-1000
Telex: 37409
Fax: 354-1-673031

INDIA

Computer products are sold through Blue Star Ltd. All computer repairs and maintenance service is done through Computer Maintenance Corp.

Blue Star Ltd.
B. D. Patel House
Near Sardar Patel Colony
AHMEDABAD 380 014
Tel: 403531, 403532
Telex: 0121-234
Cable: BLUE FROST

Blue Star Ltd.
40/4 Lavelle Road
BANGALORE 560 001
Tel: 57881, 867780
Telex: 0845-430 BSLBIN
Cable: BLUESTAR

Blue Star Ltd.
Sahas
414/2 Vir Savarkar Marg
Prabhadevi
BOMBAY 400 025
Tel: 422-6155
Telex: 011-71193 BSSS IN
Cable: FROSTBLUE

Blue Star Ltd.
Kalyan, 19 Vishwas Colony
Alkapuri, **BARODA**, 390 005
Tel: 65235, 65236
Cable: BLUE STAR

Blue Star Ltd.
7 Hare Street
P.O. Box 506
CALCUTTA 700 001
Tel: 230131, 230132
Telex: 031-61120 BSNF IN
Cable: BLUESTAR

Blue Star Ltd.
13 Community Center
New Friends Colony
NEW DELHI 110 065
Tel: 682547
Telex: 031-2463
Cable: BLUEFROST

Blue Star Ltd.
2-2-47/1108 Bolarum Rd.
SECUNDERABAD 500 003
Tel: 72057, 72058
Telex: 0155-459
Cable: BLUEFROST

Blue Star Ltd.
T.C. 7/603 Poornima
Maruthunkuzhi
TRIVANDRUM 695 013
Tel: 65799, 65820
Telex: 0884-259
Cable: BLUESTAR

Hewlett-Packard India
Meridian Commercial Complex
6th Floor
8 Windsor Place
Janpath
NEW DELHI 110 001
Tel: 91-11384911
Telex: 31-4935 HPNDIN

INDONESIA

BERCA Indonesia P.T.
P.O.Box 496/Jkt.
Jl. Abdul Muis 62
JAKARTA
Tel: 21-373009
Telex: 46748 BERSAL IA
Cable: BERSAL JAKARTA

BERCA Indonesia P.T.
P.O.Box 2497/Jkt
Antara Bldg., 12th Floor
Jl. Medan Merdeka Selatan 17
JAKARTA-PUSAT
Tel: 21-340417
Telex: 46748 BERSAL IA

BERCA Indonesia P.T.
Jalan Kutai 24
SURABAYA
Tel: 67118
Telex: 31146 BERSAL SB
Cable: BERSAL-SURABAYA

IRAQ

Hewlett-Packard Trading S.A.
Service Operation
Al Mansoor City 609/10/7
BAGHDAD
Tel: 551-49-73
Telex: 212-455 HEPAIRAQ IK

IRELAND

Hewlett-Packard Ireland Ltd.
Temple House, Temple Road
Blackrock, Co. **DUBLIN**
Tel: (353/1) 883399
Telex: 30439

Hewlett-Packard Ltd.
75 Belfast Rd, Carrickfergus
Belfast BT38 8PH
NORTHERN IRELAND
Tel: 09603-67333
Telex: 747626

ISRAEL

Eldan Electronic Instrument Ltd.
P.O. Box 1270
JERUSALEM 91000
16, Ohaliav St.
JERUSALEM 94467
Tel: 533 221, 553 242
Telex: 25231 AB/PAKRD IL

Computation and Measurement
Systems (CMS) Ltd.
11 Masad Street
67060
TEL-AVIV
Tel: 388 388
Telex: 33569 Motil IL

ITALY

Hewlett-Packard Italiana Spa
Via G. di Vittorio 10
20094 **CORSICO (MI)**
Tel: 02/4408351
Fax: 02/4409964

Hewlett-Packard Italiana Spa
Via Nuova Rivoltana 95
20090 **LIMITO (MI)**
Tel: 02/75761
Fax: 02/7576230

Hewlett-Packard Italiana Spa
Via Emilia 51/C
40011 **ANZOLA**
DELL'EMILIA (BO)
Tel: 051/731061

Hewlett-Packard Italiana Spa
Via M. Ricci 17 - Palombina Nuova
60100 **ANCONA**
Tel: 071/883782

Hewlett-Packard Italiana Spa
Traversa 99C Giulio Petroni 19
70124 **BARI**
Tel: 080/410744
Fax: 080/417891

Hewlett-Packard Italiana Spa
Via Principe Nicola 43G/C
95126 **CATANIA**
Tel: 095/371087
Fax: 095/388569

Hewlett-Packard Italiana Spa
Via G. Di Vittorio 9
20063 **CERNUSCO S/N (MI)**
Tel: 02/923691
Fax: 02/9237746

Hewlett-Packard Italiana Spa
Via Sacco e Vanzetti 1/A
50145 **FIRENZE**
Tel: 055/318533
Fax: 055/373965

Hewlett-Packard Italiana Spa
Viale Brigata Bisagno 2
16129 **GENOVA**
Tel: 010/541141
Fax: 010/591733

Hewlett-Packard Italiana Spa
Via Orazio 16
80122 **NAPOLI**
Tel: 081/7611444
Fax: 081/680164

Hewlett-Packard Italiana Spa
Via Pellizzo 15
35128 **PADOVA**
Tel: 049/8070166
Fax: 049/773097

Hewlett-Packard Italiana Spa
Via Del Tintoretto 200
00144 **ROMA**
Tel: 06/54831
Fax: 06/5408710

SALES OFFICES
Arranged alphabetically by country (cont'd)

ITALY (Cont'd)

Hewlett-Packard Italiana Spa
Corso Svizzera 185
10149 **TORINO**
Tel: 011/744044
Fax: 011/771 0815

IVORY COAST

Ste Ivoirienne des Techniques
de l'Informatique
Immeuble C.N.A. - 5e etage
Avenue General de Gaulle
P.O. Box 161
ABIDJAN 01
Tel: 32 12 27
Telex: 22149

Engineering Business Concept (E.B.C.)
Angle Avenue J. Anoma et Bd.
République
08 B.P. 323 **ABIDJAN** 08
Tel: 32 50 24, 41 48 70
Fax: 35 37 90

JAPAN

Yokogawa-Hewlett-Packard Ltd.
Nihon-Seimei Akita
Chuo-Dori Bldg.
4-2-7 Naka-dori
AKITA, 010
Tel: (81/188) 36-5021

Yokogawa-Hewlett-Packard Ltd.
152-1, Onna
ATSUGI, Kanagawa, 243
Tel: (81/462) 25-0031
Fax: (81/462) 25-0064

Yokogawa-Hewlett-Packard Ltd.
3-1 Motochiba-Cho
CHIBA, 280
Tel: (81/472) 25-7701
Fax: (81/472) 21-0382

Yokogawa-Hewlett-Packard Ltd.
Dai-3 Hakata-Kaisei Bldg.
1-3-6 Hakata-eki Minami
Hakata-Ku, **FUKUOKA** 812
Tel: (81/92) 472-8731

Yokogawa-Hewlett-Packard Ltd.
Nihon-Dantai-Seimei-
Koriyama Bldg.
21-10 Toramaru-Cho,
Koriyama **FUKUSHIMA,** 963
Tel: (81/249) 39-7111

Yokogawa-Hewlett-Packard Ltd.
Yasuda-Seimei Hiroshima Bldg.
6-11, Hon-dori, Naka-ku
HIROSHIMA, 730
Tel: (81/82) 241-0611
Fax: (81/82) 241-0619

Yokogawa-Hewlett-Packard Ltd.
Issei Bldg.
2-3-17 Takezono, Tsukuba
IBARAGI, 305

Yokogewa-Hewlett-Packard Ltd.
Mito Mitsui Bldg.
1-4-73, Senno-maru
Mito, **IBARAKI** 310
Tel: (81/292) 25-7470

Yokogawa-Hewlett-Packard Ltd.
Towa Building 2-2-3
Kaigan-dori, Chuo-ku
KOBE, 650
Tel: (81/78) 392-4791
Fax: (81/78) 392-4839

Yokogawa-Hewlett-Packard Ltd.
Kumagaya Asahi 82 Bldg.
3-4 Tsukuba
KUMAGAYA, Saitama 360
Tel: (81/485) 24-6563
Fax: (81/485) 24-9050

Yokogawa-Hewlett-Packard Ltd.
Shin-Kyoto Center Bldg.
614 Higashi-Shiokoji-cho
Karasuma-Nishi-Iru, Shiokoji-Dori
Shimogyo-Ku, **KYOTO,** 600
Tel: (81/75) 343-0921
Fax: (81/75) 343-4356

Yokogawa-Hewlett-Packard Ltd.
Mito Mitsui Bldg.
1-4-73, Sanno-Maru
MITO, Ibaraki 310
Tel: (81/292) 25-7470
Fax: (81/292) 31-6589

Yokogawa-Hewlett-Packard Ltd.
Nagano-Tokyokaijyo Bldg.
1081, Minamiagata-Machi
Nagano-Shi, **NAGANO,** 380
Tel: (81/262) 24-8012
Fax: (81/262) 24-8016

Yokogawa-Hewlett-Packard Ltd.
Nagoya Kokusai Center Building
1-47-1, Nagono, Nakamura-ku
NAGOYA, AICHI 450
Tel: (81/52) 571-5171
Fax: (81/52) 565-0896

Yokogawa-Hewlett-Packard Ltd.
Sai-Kyo-Ren Building
1-2 Dote-cho
OOMIYA-SHI SAITAMA 330
Tel: (0486) 45-8031

Yokogawa-Hewlett-Packard Ltd.
Chuo Bldg., 5-4-20 Nishi-Nakajima
4-20 Nishinakajima, 5 Chome,
Yodogawa-ku
OSAKA, 532
Tel: (81/6) 304-6021
Fax: (81/6) 304-0216

Yokogawa-Hewlett-Packard Ltd.
1-27-15, Yabe
SAGAMIHARA Kanagawa, 229
Tel: (81/427) 59-1311

Yokogawa-Hewlett-Packard Ltd.
Hamamtsu Motoshiro-Cho Daichi
Seimei Bldg 219-21, Motoshiro-Cho
Hamamatsu-shi
SHIZUOKA, 430
Tel: (81/534) 56-1771
Fax: (81/534) 552371

Yokogawa-Hewlett-Packard Ltd.
Shinjuku Daiichi Seimei Bldg.
Nishi Shinjuku 2-7-1,
Shinjuku-ku,**TOKYO** 163
Tel: (81/3) 348-4611
Fax: (81/3) 348-7969

Yokogawa-Hewlett-Packard Ltd.
9-1, Takakura-cho
Hachioji-shi, **TOKYO,** 192
Tel: 81-426-42-1231

Yokogawa-Hewlett-Packard Ltd.
Tokyo-Nissam-Minato Bldg.
1-6-34 Konan, Minato-Ku
TOKYO 108
Tel: (81/3) 458-5411

Yokogawa-Hewlett-Packard Ltd.
29-21 Takaido-Higashi, 3-chome
Suginami-ku **TOKYO** 168
Tel: (03) 331-6111
Telex: 232-2024 YHPTOK

Yokogawa Hokushin Electric Corp.
(YEW)
Shinjuku-NS Bldg. 10F
9-32 Nokacho 2 Chome
Shinjuku-ku
TOKYO, 163
Tel: (03) 349-1859
Telex: J27584

Yokogawa-Hewlett-Packard Ltd.
Toyoda-Tokyo-Kaijo Bldg.
1-179 Miyuki-Hon-Cho
TOYODA 473
Tel: (81/565) 27-5611

Yokogawa-Hewlett-Packard Ltd.
Chiyodaseimei-Utsunomiya Bldg.
2-3-1, Ohdori, **UTSUNOMIYA,** Tochigi-Shi 320
Tel: (81/286) 33-1153
Fax: (61/286) 33-1175

Yokogawa-Hewlett-Packard Ltd.
No. 2 Yasuda Bldg.
2-32-12, Tsuruyo-cho
Kanagawa-ku, **YOKOHAMA** 221
Tel: (81/45) 312-1252
Fax: (81/45) 311-8328

KENYA

ADCOM Ltd., Inc., Kenya
P.O. Box 30070
NAIROBI
Tel: 331955
Telex: 22639

KOREA

Samsung Hewlett-Packard Co. Ltd.
Dongbang Yeoeuido Building
36-1 Yeoeui Do-Dong
Youngdeungpo-Ku
SEOUL, 150
Tel: (82/2) 784-4666, 784-2666
Fax: (82/2) 784-7084
Telex: 25166 SAMSAN K

KUWAIT

Al-Khaldiya Trading & Contracting
P.O. Box 830
SAFAT 13009
Tel: 242 49 10, 241 17 26
Telex: 22481 AREEG KT
Cable: VISCOUNT

LEBANON

Computer Information Systems S.A.L.
Chammas Building
P.O. Box 11-6274
DORA BEIRUT
Tel: 89 31 13, 58 18 35
Telex: 42309 chacis le
Fax: 58 18 34

LUXEMBOURG

Hewlett-Packard Belgium S.A./N.V.
Blvd de la Woluwe, 100
Woluwedal
B-1200 **BRUSSELS**
Tel: (32/2) 761-3111
Telex: 23-494 paloben bru

MADAGASCAR

R.T.I.
175, Rue Blomet
75015 Paris
FRANCE
Tel: (1) 45 31 09 06
Tlx: 203376
Fax: (1) 45 31 09 18

MALAWI

Systron (Private) Ltd.
Manhattan Court
61 Second Street
P.O. Box 3458
HARARE
Zimbabwe
Tel: 739881/739885
Telex: 4122
Fax: 70 20 08

MALAYSIA

Hewlett-Packard Sales (Malaysia)
Sdn. Bhd.
9th Floor
Chung Khiaw Bank Building
46, Jalan Raja Laut
50350 **KUALA LUMPUR, MALAYSIA**
Tel: (60/3) 298-6555
Fax: (60/3) 291-5495

Protel Engineering
P.O.Box 1917
Lot 6624, Section 64
23/4 Pending Road
Kuching, **SARAWAK**
Tel: 36299
Telex: 70904 PROMAL MA
Cable: PROTELENG

MALTA

R.T.I.
175, Rue Blomet
75015 **PARIS**
France
Tel: (1) 45 31 09 06
Telex: 203376
Fax: (1) 45 31 09 18

MAURITANIA

R.T.I.
175, Rue Blomet
75015 **PARIS**
France
Tel: (1) 45 31 09 06
Tlx: 203376
Fax: (1) 45 31 09 18

MAURITIUS

R.T.I.
175, Rue Blomet
75015 **PARIS**
France
Tel: (1) 45 31 09 06
Telex: 203376
Fax: (1) 45 31 09 18

MEXICO

Hewlett-Packard de Mexico,
S.A. de C.V.
Rio Nio No. 4049 Desp. 12
Fracc. Cordoba
JUAREZ, Mexico
Tel: 161-3-15-62

Hewlett-Packard de Mexico,
S.A. de C.V.
Condominio Kadereyta
Circuito del Mezon No. 186 Desp. 6
Col. Del Prado - 76030
QRO, Mexico
Tel: 463-6-02-71

Hewlett-Packard de Mexico,
S.A. de C.V.
Monti Morelos No. 299
Fraccionamiento Loma Bonita 45060
GUADALAJARA, Jalisco
Tel: (52/36) 31 46 00
Telex: 0684 166 ECOME

Hewlett-Packard de Mexico,
S.A. de C.V.
Monte Pelvoux No. 111
Lomas de Chapultepec
11000 **MEXICO, D.F.**
Tel: (52/5) 596 79 33
Fax: (52/5) 596 42 08 (Ext 3231)

Hewlett-Packard de Mexico,
S.A. de C.V.
Czda. del Valle
409 Ote. 4th Piso
Colonia del Valle
Municipio de Garcia
66220 **NUEVO LEON**
Tel: 83-78-42-40
Telex: 382410 HPMY

Hewlett-Packard Co.
Latin America Region
Customer Support Center
7208 N.W. 31st St.
MIAMI, FL 33122
United States
Tel: (305) 599-0465
Telex: 441603 HPMIAMI
Fax: 599-0277

Hewlett-Packard de Mexico,
S.A. de C.V.
Blvd. Independencia No. 2000 Ote.
Ote Zerpiso
Co 1 Estrella
27010 **TORREON, COA.**
Tel: (52/171) 8 22 01

MOROCCO

Sicotel
Complexe des Habous
Tour C, avenue des Far
CASABLANCA 01
Tel: 31 22 70
Telex: 27604

R.T.I.
175, Rue Blomet
75015 **PARIS**
France
Tel: (1) 45 31 09 06
Tlx: 203376
Fax: (1) 45 31 09 18

Socofren Maroc
164, Boulevard D' Anfa
CASABLANCA
Tel: 36 08 84, 36 01 77
Telex: 23940

NETHERLANDS

Hewlett-Packard Nederland
Startbaan 16
1187 XR **AMSTELVEEN**
Tel: (31/20) 5476911
Telex: 13 216 HEPA NL
Fax: (31/20) 471825

Hewlett-Packard Nederland B.V.
Bongerd 2
NL 2900AA **CAPELLE A/D IJSSEL**
Tel: 31-20-51-6444
Telex: 21261 HEPAC NL

Hewlett-Packard Nederland B.V.
Pastoor Petersstraat 134-136
P.O. Box 2342
NL 5600 CH **EINDHOVEN**
Tel: 31-40-32-6911
Telex: 51484 hepae nl
Fax: (31/40) 446546

NEW ZEALAND

Hewlett-Packard (N.Z.) Ltd.
5 Owens Road
P.O. Box 26-189
Epsom, **AUCKLAND**
Tel: (64/9) 605-651
Fax: (64/9) 600-507

Hewlett-Packard (N.Z.) Ltd.
186-190 Willis Street
P.O. Box 9443
WELLINGTON
Tel: (64/4) 820-400
Fax: (64/4) 843-380

NIGER

S.I.T.E.L.
Immeuble le General
Avenue General de Gaulle
PO Box 161
ABIDJAN 01
Ivory Coast
Tel: 32 12 27
Telex: 22149

NIGERIA

Management Information Systems Ltd.
3 Gerrard Road, Ikoyi
LAGOS
Tel: 68 08 87
Telex: 23582
Fax: 68 54 87

NORTHERN IRELAND

See United Kingdom

NORWAY

Hewlett-Packard Norway A/S
Oesterndalen 16-18
P.O. Box 34
N-1345 **OESTERAAS**
Tel: (47/2) 24-6090
Telex: 76621 HPNAS N

Hewlett-Packard Norway A/S
Boemergt. 42
Box 2470
N-5037 **SOLHEIMSVIK**
Tel: (5/29) 10 72

OMAN

Suhail & Saud Bahwan
P.O.Box 169
MUSCAT/SULTANATE OF OMAN
Tel: 79 37 41
Telex: 3585 mb
Fax: 79 61 58

Imtac LLC
P.O. Box 9196
MINA AL FAHAL/SULTANATE OF OMAN
Tel: 70-77-27, 70-77-23
Telex: 3865 Tawoos On

PAKISTAN

Mushko & Company Ltd.
House No. 16, Street No. 16
Sector F-6/3
ISLAMABAD
Tel: 824545
Telex: 54001 Muski Pk
Cable: FEMUS Islamabad

Mushko & Company Ltd.
Oosman Chambers
Abdullah Haroon Road
KARACHI 0302
Tel: 524131, 524132
Telex: 2894 MUSKO PK
Cable: COOPERATOR Karachi

PANAMA

Electronico Balboa, S.A.
Calle Samuel Lewis, Ed. Alfa
Apartado 4929
PANAMA CITY
Tel: 9-011-507-636613
Telex: 368 3483 ELECTRON PG

PERU

Cía Electro Médica S.A. (ERMED)
Los Flamencos 145, Ofc. 301/2
San Isidro
Casilla 1030
LIMA 1 Peru
Tel: 9-011-511-4-414325, 41-3705
Telex: 39425257 PE PB SIS

PHILIPPINES

The Online Advanced Systems Corp.
2nd Floor, Electra House
115-117 Esteban Street
P.O. Box 1510
Legaspi Village, Makati
Metro **MANILA**
Tel: 815-38-10 (up to 16)
Telex: 63274 ONLINE PN

PORTUGAL

Mundinter Intercambio
Mundial de Commercio
Avenida Antonio 2761
LISBON
Tel: 53 21 31, 53 21 37
Telex: 16691

CPC Instrumentacao
Torre de Santo Antonio
rue Gregorio Lopes, Lote
Restelo
1400 **LISBON**
Tel: 617343/44/45/46
Telex: 27432/26054
Fax: 617345

C.P.C.S.I.
Rua de Costa Cabral 575
4200 **PORTO**
Tel: 493122
Telex: 26054, 27432
Fax: 48 87 21

PUERTO RICO

Hewlett-Packard Puerto Rico
Box 4048
Aguadilla, PR 00605
Tel: (809) 891-5235

Hewlett-Packard Puerto Rico
101 Munoz Rivera Avenue
Esu. Calle Ochoa
HATO REY, 00918
Tel: (809) 754-7800

QATAR

Qatar Datamation Systems
P.O. Box 350
DOHA
Tel: 41 32 82
Tlx: 4833
Fax: 42 63 78

REUNION ISLAND

R.T.I.
175, Rue Blomet
75015 **PARIS**
France
Tel: (33/1) 45310906
Telex: 42/203376

RWANDA

R.T.I.
175, Rue Blomet
75015 **PARIS**
France
Tel: (33/1) 45310906
Telex: 42/203376
Fax: (1) 45 31 09 18

SAUDI ARABIA

Modern Electronics Establishment
P.O. Box 281
Thuobah
AL-KHOBAR 31952
Tel: 895-1760, 895-1764
Telex: 671 106 HPMEEK SJ
Cable: ELECTA AL-KHOBAR

Modern Electronics Establishment
P.O. Box 1228
Redec Plaza, 6th Floor
JEDDAH
Tel: 644 96 28
Telex: 4027 12 FARNAS SJ
Cable: ELECTA JEDDAH

Modern Electronics Establishment
P.O.Box 22015
RIYADH 11495
Tel: 4763030
Telex: 402040 MEERYD SJ

SCOTLAND

See United Kingdom

SENEGAL

2SC
10, rue Tolbiac
B.P. 3716
DAKAR R.P.
(Please contact R.T.I. France.)
Tel: (221) 222248
Telex: 906/671

R.T.I.
175, Rue Blomet
75015 **PARIS**
France
Tel: 45310906
Telex: 203376
Fax: (1) 45 31 09 18

SINGAPORE

Hewlett-Packard Singapore Ltd.
1150 Depot Road
SINGAPORE, 0410
Tel: (65) 273 7388
Fax: (65) 278 8990

SOUTH AFRICA

Hi Performance Systems (Pty.) Ltd.
P.O. Box 120, Howard Place
CAPE TOWN 7450
Tel: (27/21) 53-7954
Fax: (27/21) 53-5119

Hi Performance Systems (Pty.) Ltd.
Private Bag Wendywood
SANDTON 2144
Tel: (27/11) 802-5111
Fax: (27/11) 802-6332

SPAIN

Hewlett-Packard Española, S.A.
Avda. Diagonal, 605
08028-**BARCELONA**
Tel: (34/3) 401 91 00
Telex: 52603 hpbee

Bilbao (Vizcaya) Sales
Hewlett-Packard Español, S.A.
Avda. Zugazarte, 8
48930 - Las Arenas - **VIZCAYA**

Hewlett-Packard Española, S.A.
Crta. N-VI, Km. 16, 500
Las Rozas
E-MADRID
Tel: (34/1) 6370011
Telex: 23515 HPE

Hewlett-Packard Española, S.A.
Avda. S. Francisco Javier, S/N
Planta 10. Edificio Sevilla 2
E-SEVILLA 5, SPAIN
Tel: (34/54/64) 4454
Telex: 72933

Hewlett-Packard Española, S.A.
Isabel La Catolica, 8
46004 **VALENCIA**
Tel: (34/6) 351 59 44
Telex: 63435
Fax: (34/6) 351 59 44

Hewlett-Packard Española, S.A.
Avda. de Zugazarte, 8
48930 - Las Arenas
VIZCAYA
Tel: (34/4) 464 32 55
Telex: 33032

SUDAN

Mediterranean Engineering &
Trading Co., Ltd.
P.O. Box 1025
KHARTOUM
Tel: (249) 41184
Telex: 24052

R.T.I.
175, Rue Blomet
75015 **PARIS**
France
Tel: (1) 45 31 09 06
Tlx: 203376
Fax: (1) 45 31 09 18

SWEDEN

Hewlett-Packard Sverige AB
Östra Tullgatan 3
20011 **MALMÖ**
Box 6132
Tel: (46/40) 702 70
Telex: (854) 17886 (via Spånga office)
Fax: (46/40) 97 74 18

Hewlett-Packard Sverige AB
Elementvagen 16
S-7022 7 **ÖREBRO**
Tel: (49/19) 10 48 80
Telex: (854) 17886 (via Spånga office)

Hewlett-Packard Sverige AB
Skalholtsgatan 9, Kista
P.O. Box 19
S-16493 **KISTA**
Tel: 46/8/750-200
Telex: (854) 17886
Telefax: (08) 7527781

Hewlett-Packard Sverige AB
Box 266
Topasgatan 1A
S-42123 **VÄSTRA-FROLUNDA**
(Gothenburg)
Tel: (031) 891000
Telex: (854) 17886 (via Spånga office)

SWITZERLAND

Hewlett-Packard (Schweiz) AG
Clarastrasse 12
CH-4058 **BASEL**
Tel: (41/61) 681 59 20
Fax: (41/61) 681 98 59

Hewlett-Packard (Schweiz) AG
7, rue du Bois-du-Lan
Case postale 365-1366
CH-1217 **MEYRIN** 1
Tel: (41/22) 7804111
Telex:27333 HPAG CH

Hewlett-Packard (Schweiz) AG
Allmend
CH-8967 **WIDEN**
Tel: (41/57) 321 111
Telex: 53933 HPAG CH
Fax: (41/57) 321 475

SYRIA

Middle East Electronics
P.O.Box 2308
Abu Rumaneh
DAMASCUS
Tel: 33 45 92
Telex: 411 771 Meesy

TAIWAN

Hewlett-Packard Taiwan Ltd.
Taipei Office
8th Floor, Hewlett-Packard Building
337 Fu Hsing North Road
TAIPEI
Tel: (02) 712-0404
Telex: 24439 HEWPACK
Cable: HEWPACK Taipei

Hewlett-Packard Taiwan Ltd.
THM Office
2, Huan Nan Road
CHUNG LI, Taoyuan
Tel: (034) 929-666

SALES OFFICES
Arranged alphabetically by country (cont'd)

TAIWAN (Cont'd)

Hewlett-Packard Taiwan Ltd.
Taichung Office
5FL, 67, Sec. 3,
Wen-Hsin Road,
TAICHUNG
Tel: (04) 254-1201

Hewlett-Packard Taiwan Ltd.
Kaohsiung Office
11/F, 456, Chung Hsiao 1st Road
KAOHSIUNG
Tel: (07) 2412318

TANZANIA

Adcom Ltd, Inc. Kenya
P.O. Box 30070
NAIROBI
Kenya
Tel: 33 19 55
Telex: 22639

THAILAND

Unimesa Co. Ltd.
2540 Sukumwit Avenue
Bangna
BANGKOK 10260
Tel: 662-398-6953
Telex: 84439 Simonco TH
Cable: UNIMESA Bangkok

TOGO

S.I.T.E.L.
Immeuble le General
Avenue General de Gaulle
P.O. Box 161
ABIDJAN 01
Ivory Coast
Tel: 32 12 27
Telex: 22149

Societe Africaine De Promotion
Immeuble Sageb
Rue d'Atakpame
P.O. Box 4150
LOME
Tel: 21-62-88
Telex: 5357

TRINIDAD & TOBAGO

Caribbean Telecoms Ltd.
Corner McAllister Street &
Eastern Main Road, Laventille
P.O. Box 732
PORT-OF-SPAIN
Tel: 624-4213
Telex: 22561 CARTEL WG
Cable: CARTEL, PORT OF SPAIN

Computer and Controls Ltd.
P.O. Box 51
1 Taylor Street
PORT-OF-SPAIN
Tel: (809) 622-7719/622-7985
Telex: 38722798 COMCON WG
LOOGO AGENCY 1264

TUNISIA

Precision Electronique
5, rue de Chypre
Mutuelleville
1002 **TUNIS BELVEDERE**
Tunisia
Tel: 78 50 37
Tlx: 13238

TURKEY

E.M.A.
Mediha Eldem Sokak No. 41/6
Yenisehir
ANKARA
Tel: 131 4695, 131 9175
Telex: 46912n emsetr
Cable: EMATRADE ANKARA

Hewlett-Packard Bilgisayar Ve Olcum
Sistemleri A.S. (Headquarter)
Mesrutiyet Mah. 19 Mayis Cad.
Nova-Baran Plaza Kat: 11-12
SISLI / ISTANBUL
Tel: 175 29 70
Telex: 39150
Fax: 175 29 92

Hewlett-Packard Bilgisayar Ve Olcum
Sistemleri A.S.
Paris Caddesi No 3
Diare 9
06670 **ANKARA**
Tel: 125 83 13
Telex: 46180
Fax: 125 47 45

UGANDA

Adcom Ltd, Inc. Kenya
P O Box 30070
NAIROBI
Kenya
Tel: 33 19 55
Telex: 22639

UNITED ARAB EMIRATES

Emitac Ltd.
P.O. Box 1641
SHARJAH
Tel: 591181
Telex: 48710 EMITAC EM
Cable: EMITAC SHARJAH

Emitac Ltd.
P.O. Box 2711
ABU DHABI
Tel: 820419-20
Cable: EMITACH ABUDHABI

Emitac Ltd.
P.O. Box 8391
DUBAI,
Tel: 377591

Emitac Ltd.
P.O. Box 473
RAS AL KHAIMAH
Tel: 28133, 21270

UNITED KINGDOM

ENGLAND

Hewlett-Packard Ltd.
Customer Information Centre
King St. Lane
Winnersh, Wokingham
GB-**BERKSHIRE** RG11 5AR
Tel: (44/734) 784774
Telex: 847178
Fax: 777285

Hewlett-Packard Ltd.
Miller House
The Ring, **BRACKNELL**
Berkshire RG12 1XN
Tel: (44/344) 424-898
Fax: (44/344) 860015, Ext 56023

Hewlett-Packard Ltd.
Customer Sales & Support
Building 1, Filton Road
Stoke Gifford
BRISTOL, BS12 6QZ
Tel: (44/272) 236000

Hewlett-Packard Ltd.
Oakfield House, Oakfield Grove
Clifton **BRISTOL,** Avon BS8 2BN
Tel: 44-272-736 806
Telex: 444302

Hewlett-Packard Ltd.
9 Bridewell Place
LONDON EC4V 6BS
Tel: (44/583) 6565
Fax: (44/583) 6565, Ext 4713

Hewlett-Packard Ltd.
Heathside Park Rd.
Cheadle Heath, Stockport
GB-**MANCHESTER** SK3 ORB
Tel: (44/61) 428-0828
Telex: 668068
Fax: 4955009

Hewlett-Packard Ltd.
Harman House
No. 1 George St.
Uxbridge,
GB-**MIDDLESEX** UB8 1YH
Tel: (44/895) 72020
Telex: 893135
Fax: 73684

Hewlett-Packard Ltd.
Pontefract Road
NORMANTON,
West Yorkshire WF6 1RN
Tel: (44/924) 695-566
Fax: (44/924) 896-691
Telex: 557355

Hewlett-Packard Ltd.
The Quadrangle
106-118 Station Road
REDHILL, Surrey RH1 1PS
Tel: 44-737-686-55
Telex: 947234

Hewlett-Packard Ltd.
Avon House
435 Stratford Road
Shirley, **SOLIHULL,** West Midlands
B90 4BL
Tel: 44-21-745-8800
Telex: 339105

Hewlett-Packard Ltd.
Heathside Park Road
Cheadle Heath, Stockport
Cheshire SK3 ORB
Tel: (44/61) 428-0828
Fax: (44/61) 495-5009
Telex: 668068

Hewlett-Packard Ltd.
Harman House
No. 1 George Street
UXBRIDGE, Middlesex UB8 1YH
Tel: (44/895) 72020
Fax: (44/895) 73684

Hewlett-Packard Ltd.
King Street Lane
Winnersh, **WOKINGHAM**
Berkshire RG11 5AR
Tel: (44/734) 784774
Fax: (44/734) 777285 Ext 52285

NORTHERN IRELAND

Hewlett-Packard (Ireland) Ltd.
Carrickfergus Industrial Centre
75 Belfast Road, Carrickfergus
CO. ANTRIM BT38 8PM
Tel: 09603 67333

Unit 5
Bridgewood House
Newforge Lane
Malone Road
BELFAST BT95 NW
Tel: (353/232) 664-851
Fax: (353/232) 665-619

SCOTLAND

Hewlett-Packard Ltd.
1/3 Springburn Place
College Milton North
EAST KILBRIDE, G74 5NU
Tel: 035-52-49261
Fax: 03552-35929
Telex: 779615

Hewlett-Packard Ltd.
SOUTH QUEENSFERRY
West Lothian, EH30 9TG
Tel: 031-331-1188
Fax: 031-331-7412

UNITED STATES

Hewlett-Packard Co.
Customer Information Center
Tel: (800) 752-0900
Hours: 6:00 AM to 5:00 PM
Pacific Time

Alabama

Hewlett-Packard Co.
2100 Riverchase Center
Building 100 - Suite 118
BIRMINGHAM, AL 35244
Tel: (205) 988-0547
Fax: (205) 988-5308

Hewlett-Packard Co.
620 Discovery Dr.
HUNTSVILLE, AL 35806
Tel: (205) 830-2000
Fax: (205) 830-1427

Alaska

Hewlett-Packard Co.
4000 Old Seward Highway
Suite 101
ANCHORAGE, AK 99503
Tel: (907) 563-8855
Fax: (907) 561-7409

Arizona

Hewlett-Packard Co.
8080 Pointe Parkway West
PHOENIX, AZ 85044
Tel: (602) 273-8000
Fax: (602) 273-8080

Hewlett-Packard Co.
3400 East Britannia Dr.
Bldg. C, Suite 124
TUCSON, AZ 85706
Tel: (602) 573-7400
Fax: (602) 573-7429

Arkansas

Hewlett-Packard Co.
10816 Executive Center Dr
Conway Bldg. Suite 116
LITTLE ROCK, AR 72211
Tel: (501) 225-7178
Fax: (501) 221-3614

California

Hewlett-Packard Co.
26701 W. Argoura Rd.
CALABASAS, CA 91302
Tel: (818) 880-3400
Fax: (818) 880-3437

Hewlett-Packard Co.
353 Lakeside Dr
FOSTER CITY, CA 94404
Tel: (415) 378-8400
Fax: (415) 378-8405

Hewlett-Packard Co.
1907 North Gateway Blvd.
FRESNO, CA 93727
Tel: (209) 252-9652
Fax: (209) 456-9302

Hewlett-Packard Co.
1421 S. Manhattan Av.
FULLERTON, CA 92631
Tel: (714) 999-6700
Fax: (714) 778-3033

Hewlett-Packard Co.
7408 Hollister Ave. #A
GOLETA, CA 93117
Tel: (805) 685-6100
Fax: (805) 685-6163

Hewlett-Packard Co.
9800 Muirlando Ave.
IRVINE, CA 92718
Tel: (714) 472-3000
Fax: (714) 581-3607 (Direct Dial only)

Hewlett-Packard Co.
2525 Grand Avenue
LONG BEACH, CA 90815
Tel: (213) 498-1111
Fax: (213) 494-1986

Hewlett-Packard Co.
5651 West Manchester Ave.
LOS ANGELES, CA 90045
Tel: (213) 337-8000
Fax: (213) 337-8338

Hewlett-Packard Co.
321 E. Evelyn Ave.
Bldg. 330
MOUNTAIN VIEW, CA 94039
Tel: (415) 694-2000
Fax: (415) 694-0600

Hewlett-Packard Co.
5161 Lankershim Blvd.
NORTH HOLLYWOOD, CA 91601
Tel: (818) 505-5600
Fax: (818) 505-5875

Hewlett-Packard Co.
5725 W. Las Positas Blvd.
PLEASANTON, CA 94566
Tel: (415) 460-0282
Fax: (415) 460-0713

Hewlett-Packard Co.
4244 So. Market Court, Suite A
SACRAMENTO, CA 95834
Tel: (916) 929-7222
Fax: (916) 927-7152

Hewlett-Packard Co.
9606 Aero Drive
SAN DIEGO, CA 92123
Tel: (619) 279-3200
Fax: (619) 268-8487

Hewlett-Packard Co.
50 Fremont St. Suite 200
SAN FRANCISCO, CA 94105
Tel: (415) 882-6800
Fax: (415) 882-6805

Hewlett-Packard Co.
3003 Scott Boulevard
SANTA CLARA, CA 95054
Tel: (408) 988-7000
Fax: (408) 988-7103

Hewlett-Packard Co.
5280 Valentine Rd. Suite 205
VENTURA, CA 93003
Tel: (805) 658-6898
Fax: (805) 650-0721

Colorado

Hewlett-Packard Co.
2945 Center Green Court South
Suite A
BOULDER, CO 80301
Tel: (303) 938-3065
Fax: (303) 938-3025

Hewlett-Packard Co.
24 Inverness Place, East
ENGLEWOOD, CO 80112
Tel: (303) 649-5000
Fax: (303) 649-5787

Connecticut

Hewlett-Packard Co.
3 Parkland Dr.
DARIEN, CT 06820
Tel: (203) 656-0040
Fax: (203) 656-5563

Hewlett-Packard Co.
115 Glastonbury Blvd
GLASTONBURY, CT 06033
Tel: (203) 633-8100
Fax: (203) 659-6087

Florida

Hewlett-Packard Co.
5900 N. Andrews, Suite 100
FORT LAUDERDALE, FL 33309
Tel: (305) 938-9800
Fax: (305) 938-2293

Hewlett-Packard Co.
6800 South Point Parkway
Suite 301
JACKSONVILLE, FL 32216
Tel: (904) 636-9955
Fax: (904) 636-9955

Hewlett-Packard Co.
255 East Drive, Suite B
MELBOURNE, FL 32901
Tel: (407) 729-0704
Fax: (407) 723-4557

Hewlett-Packard Co.
6177 Lake Ellenor Drive
ORLANDO, FL 32809
Tel: (407) 859-2900
Fax: (407) 826-9309

Hewlett-Packard Co.
4700 Bayou Blvd.
Building 5
PENSACOLA, FL 32503
Tel: (904) 476-8422
Fax: (904) 476-4116

Hewlett-Packard Co.
5550 Idlewild, #150
TAMPA, FL 33634
Tel: (813) 884-3282
Fax: (813) 889-4445

Georgia

Hewlett-Packard Co.
2015 South Park Place
ATLANTA, GA 30339
Tel: (404) 955-1500
Fax: (404) 980-7669

Hewlett-Packard Co.
3607 Parkway Lane
Suite 300
NORCROSS, GA 30092
Tel: (404) 448-1894
Fax: (404) 246-5206

Hawaii

Hewlett-Packard Co.
Pacific Tower
1001 Bishop St.
Suite 2400
HONOLULU, HI 96813
Tel: (808) 526-1555
Fax: (808) 536-7873

Idaho

Hewlett-Packard Co.
11309 Chinden Blvd.
BOISE, ID 83714
Tel: (208) 323-2700
Fax: (208) 323-2528

Illinois

Hewlett-Packard Co.
2205 E. Empire St.
BLOOMINGTON, IL 61704
Tel: (309) 662-9411
Fax: (309) 662-0351

Hewlett-Packard Co.
525 W. Monroe St., Suite 1308
CHICAGO, IL 60606
Tel: (312) 930-0010
Fax: (312) 930-0986

Hewlett-Packard Co.
1200 East Diehl Road
NAPERVILLE, IL 60566
Tel: (312) 357-8800
Fax: (312) 357-9896

Hewlett-Packard Co.
5201 Tollview Drive
ROLLING MEADOWS, IL 60008
Tel: (312) 255-9800
Fax: (312) 259-5878

Indiana

Hewlett-Packard Co.
11911 N. Meridian St.
CARMEL, IN 46032
Tel: (317) 844-4100
Fax: (317) 843-1291

Hewlett-Packard Co.
111 E. Ludwig Road
Suite 108
FT. WAYNE, IN 46825
Tel: (219) 482-4283
Fax: (219) 482-9907

Iowa

Hewlett-Packard Co.
4050 River Center Court
CEDAR RAPIDS, IA 52402
Tel: (319) 393-0606
Fax: (319) 378-1024

Hewlett-Packard Co.
4201 Corporate Dr.
WEST DES MOINES, IA 50265
Tel: (515) 224-1435
Fax: (515) 224-1870

Kansas

Hewlett-Packard Co.
North Rock Business Park
3450 N. Rock Rd.
Suite 300
WICHITA, KS 67226
Tel: (316) 636-4040
Fax: (316) 636-4504

Kentucky

Hewlett-Packard Co.
305 N. Hurstbourne Lane,
Suite 100
LOUISVILLE, KY 40222
Tel: (502) 426-0100
Fax: (502) 426-0322

Louisiana

Hewlett-Packard Co.
160 James Drive East
ST. ROSE, LA 70087
Tel: (504) 467-4100
Fax: (504) 467-4100 x 291

Maryland

Hewlett-Packard Co.
3701 Koppers Street
BALTIMORE, MD 21227
Tel: (301) 644-5800
Fax: (301) 362-7650

Hewlett-Packard Co.
2 Choke Cherry Road
ROCKVILLE, MD 20850
Tel: (301) 948-6370
Fax: (301) 948-5986

Massachusetts

Hewlett-Packard Co.
1775 Minuteman Road
ANDOVER, MA 01810
Tel: (508) 682-1500
Fax: (508) 794-2619

Hewlett-Packard Co.
29 Burlington Mall Rd.
BURLINGTON, MA 01803-4514
Tel: (617) 270-7000
Fax: (617) 221-5240

Michigan

Hewlett-Packard Co.
3033 Orchard Vista S.E.
GRAND RAPIDS, MI 49546
Tel: (616) 957-1970
Fax: (616) 956-9022

Hewlett-Packard Co.
39550 Orchard Hill Place Drive
NOVI, MI 48050
Tel: (313) 349-9200
Fax: (313) 349-9240

Hewlett-Packard Co.
560 Kirts Rd.
Suite 101
TROY, MI 48084
Tel: (313) 362-5180
Fax: (313) 362-3028

Minnesota

Hewlett-Packard Co.
2025 W. Larpenteur Ave.
ST. PAUL, MN 55113
Tel: (612) 644-1100
Fax: (612) 641-9787

Mississippi

Hewlett-Packard Co.
800 Woodland Parkway, Suite 101
RIDGELAND, MS 39157
Tel: (601) 957-0730
Fax: (601) 957-2515

Missouri

Hewlett-Packard Co.
13001 Hollenberg Drive
BRIDGETON 63044
Tel: (314) 344-5100
Fax: (314) 344-5273

Hewlett-Packard Co.
6601 Winchester Ave.
KANSAS CITY, MO 64133
Tel: (816) 737-0071
Fax: (816) 737-4690

Montana

Hewlett-Packard Co.
13001 Hollenberg Drive
BRIDGETON, MT 63044
Tel: (314) 344-5100
Fax: (314) 344-5273

Nebraska

Hewlett-Packard
11626 Nicholas St.
OMAHA, NE 68154
Tel: (402) 493-0300
Fax: (402) 493-4334

New Jersey

Hewlett-Packard Co.
120 W. Century Road
PARAMUS, NJ 07653
Tel: (201) 599-5000
Fax: (201) 599-5382

Hewlett-Packard Co.
10 Sylvan Way
PARSIPPANY, NJ 07054
Tel: (201) 682-4000
Fax: (201) 682-4031

Hewlett-Packard Co.
20 New England Av.
PISCATAWAY, NJ 08854
Tel: (201) 562-6100
Fax: (201) 562-6246

New Mexico

Hewlett-Packard Co.
7801 Jefferson N.E.
ALBUQUERQUE, NM 87109
Tel: (505) 823-6100
Fax: (505) 823-1243

Hewlett-Packard Co.
1362-C Trinity Dr.
LOS ALAMOS, NM 87544
Tel: (505) 662-6700
Fax: (505) 662-4312

New York

Hewlett-Packard Co.
5 Computer Drive South
ALBANY, NY 12205
Tel: (518) 458-1550
Fax: (518) 458-1550 x 0393

Hewlett-Packard Co.
130 John Muir Dr.
AMHERST, NY 14228
Tel: (716) 689-3003
Fax: (716) 636-7034

Hewlett-Packard Co.
200 Cross Keys Office Park
FAIRPORT, NY 14450
Tel: (716) 223-9950
Fax: (716) 223-6331

Hewlett-Packard Co.
7641 Henry Clay Blvd.
LIVERPOOL, NY 13088
Tel: (315) 451-1820
Fax: (315) 451-1820 x 255

Hewlett-Packard Co.
No. 1 Pennsylvania Plaza
55th Floor
34th Street & 7th Avenue
MANHATTAN NY 10119
Tel: (212) 971-0800
Fax: (212) 330-6967

Hewlett-Packard Co.
2975 Westchester Ave
PURCHASE, NY 10577
Tel: (914) 935-6300
Fax: (914) 935-6497

Hewlett-Packard Co.
Executive Square Office Bldg.
66 Middlebush Rd.
WAPPINGERS FALLS, NY 12590
Tel: (914) 298-9125
Fax: (914) 298-9154

Hewlett-Packard Co.
3 Crossways Park West
WOODBURY, NY 11797
Tel: (516) 682-7800
Fax: (516) 682-7806 (2)

North Carolina

Hewlett-Packard Co.
305 Gregson Dr.
CARY, NC 27511
Tel: (919) 467-6600
Fax: (919) 460-2296
(919) 460-2297

Hewlett-Packard Co.
P.O. Box 240318
CHARLOTTE, NC 28224
Tel: (704) 527-8780
Fax: (704) 523-7857

Hewlett-Packard Co.
7029 Albert Pick Rd. #100
GREENSBORO, NC 27409
Tel: (919) 665-1800
Fax: (919) 668-1797
Mailing Address
PO Box 26500
Greensboro, NC 27426

Ohio

Hewlett-Packard Co.
2717 S. Arlington Rd.
AKRON 44312
Tel: (216) 644-2270
Fax: (216) 644-7415

Hewlett-Packard Co.
4501 Erskine Road
CINCINNATI, OH 45242
Tel: (513) 891-9870
Fax: (513) 891-0033

SALES OFFICES
Arranged alphabetically by country (cont'd)

UNITED STATES (Cont'd)

Hewlett-Packard Co.
Mcutroffe West Ave.
COPLEY, OH 44321
Tel: (216) 666-7711
Fax: (216) 666-6054

Hewlett-Packard Co.
7887 Washington Village Dr.
DAYTON, OH 45459
Tel: (513) 433-2223
Fax: (513) 433-8633

Hewlett-Packard Co.
9080 Springboro Pike
MIAMISBURG 45342
Tel. (513) 433-2223
Fax: (513) 433-3633

Hewlett-Packard Co.
15885 Sprague Road
STRONGSVILLE, OH 44136
Tel: (216) 243-7300
Fax: (216) 234-7230

Hewlett-Packard Co.
One Maritime Plaza, 5th Floor
720 Water Street
TOLEDO, OH 43604
Tel: (419) 242-2200
Fax: (419) 241-7655

Hewlett-Packard Co.
675 Brooksedge Blvd.
WESTERVILLE, OH 43081
Tel: (614) 891-3344
Fax: (614) 891-1476

Oklahoma

Hewlett-Packard Co.
3525 N.W. 56th St.
Suite C-100
OKLAHOMA CITY, OK 73112
Tel: (405) 946-9499
Fax: (405) 942-2127

Hewlett-Packard Co.
6655 South Lewis,
Suite 105
TULSA, OK 74136
Tel: (918) 481-6700
Fax: (918) 481-2250

Oregon

Hewlett-Packard Co.
9255 S. W. Pioneer Court
WILSONVILLE, OR 97070
Tel: (503) 682-8000
Fax: (503) 682-8155

Pennsylvania

Hewlett-Packard Co.
Heatherwood Industrial Park
50 Dorchester Rd.
P.O. Box 6080
HARRISBURG, PA 17112
Tel: (717) 657-5900
Fax: (717) 657-5946

Hewlett-Packard Co.
111 Zeta Drive
PITTSBURGH, PA 15238
Tel: (412) 782-0400
Fax: (412) 963-1300

Hewlett-Packard Co.
2750 Monroe Boulevard
VALLEY FORGE, PA 19482
Tel: (215) 666-9000
Fax: (215) 666-2034

South Carolina

Hewlett-Packard Co.
Brookside Park, Suite 122
1 Harbison Way
COLUMBIA, SC 29212
Tel: (803) 732-0400
Fax: (803) 732-4567

Hewlett-Packard Co.
545 N. Pleasantburg Dr.
Suite 100
GREENVILLE, SC 29607
Tel: (803) 232-8002
Fax: (803) 232-8739

Tennessee

Hewlett-Packard Co.
One Energy Center Suite 200
Pellissippi Pkwy.
KNOXVILLE, TN 37932
Tel: (615) 966-4747
Fax: (615) 966-8147

Hewlett-Packard Co.
889 Ridge Lake Blvd.,
Suite 100
MEMPHIS, TN 38119
Tel: (901) 763-4747
Fax: (901) 762-9723

Hewlett-Packard Co.
44 Vantage Way,
Suite 160
NASHVILLE, TN 37228
Tel: (615) 255-1271
Fax: (615) 726-2310

Texas

Hewlett-Packard Co.
9050 Capital of Texas Highway, North
#290
AUSTIN, TX 78759
Tel: (512) 346-3855
Fax: (512) 338-7201
Mailing Address
PO Box 9431
Austin, TX 78766-9430

Hewlett-Packard Co.
5700 Cromo Dr
EL PASO, TX 79912
Tel: (915) 833-4400
Fax: (915) 581-8097

Hewlett-Packard Co.
10535 Harwin Drive
HOUSTON, TX 77036
Tel: (713) 776-6400
Fax: (713) 776-6495

Hewlett-Packard Co.
3301 West Royal Lane
IRVING, TX 75063
Tel: (214) 869-3377
Fax: (214) 830-8951

Hewlett-Packard Co.
109 E. Toronto, Suite 100
McALLEN, TX 78503
Tel: (512) 630-3030
Fax: (512) 630-1355

Hewlett-Packard Co.
930 E. Campbell Rd.
RICHARDSON, TX 75081
Tel: (214) 231-6101
Fax: (214) 699-4337

Hewlett-Packard Co.
14100 San Pedro Ave., Suite 100
SAN ANTONIO, TX 78232
Tel: (512) 494-9336
Fax: (512) 491-1299

Utah

Hewlett-Packard Co.
3530 W. 2100 South
SALT LAKE CITY, UT 84119
Tel: (801) 974-1700
Fax: (801) 974-1780

Virginia

Hewlett-Packard Co.
840 Greenbrier Circle
Suite 101
CHESAPEAKE, VA 23320
Tel: (804) 424-7105
Fax: (804) 424-1494

Hewlett-Packard Co.
4401 Water Front Dr.
GLEN ALLEN, VA 23060
Tel: (804) 747-7750
Fax: (804) 965-9297

Hewlett-Packard Co.
2800 Electric Road Suite 100
ROANOKE, VA 24018
Tel: (703) 774-3444
Fax: (703) 989-8049

Washington

Hewlett-Packard Co.
15815 S.E. 37th Street
BELLEVUE, WA 98006
Tel: (206) 643-4000
Fax: (206) 643-8748

Hewlett-Packard Co.
N. 1225 Argonne Rd
SPOKANE, WA 99212-2657
Tel: (509) 922-7000
Fax: (509) 927-4236

West Virginia

Hewlett-Packard Co.
501 56th Street
CHARLESTON, WV 25304
Tel: (304) 925-0492
Fax: (304) 925-1910

Wisconsin

Hewlett-Packard Co.
275 N. Corporate Dr.
BROOKFIELD, WI 53005
Tel: (414) 792-8800
Fax: (414) 792-0218

URUGUAY

Pablo Ferrando S.A.C. e I.
Avenida Italia 2877
Casilla de Correo 370
MONTEVIDEO
Tel: 59-82-802-586
Telex: 398802566

Olympia de Uruguay S.A.
Maquines de Oficina
Avda. del Libertador 1997
Casilla de Correos 6644
MONTEVIDEO
Tel: 91-1809, 98-3807
Telex: 6342 OROU UY

VENEZUELA

Analytical Supplies, CA
Quinta #103 Impermes
Av El Centro
Los Chorros
Apartado 75472
CARACAS
Tel: 364904, 2394047
Telex: 26274 CABIC

Hewlett-Packard de Venezuela C.A.
Residencias Tia Betty Local 1
Avenida 3 Y con Calle 75
MARACAIBO, Estado Zulia
Apartado 2646
Tel: 586175669
Telex: 62464 HPMAR

YUGOSLAVIA

Do Hermes
General Zdanova 4
YU-11000 **BEOGRAD**
Tel: (011) 342 641
Telex: 11433

Do Hermes
Celovska 73
YU-61000 **LJUBLJANA**
Tel: (061) 553 170
Telex: 31583

ZAIRE

C.I.E.
Computer & Industrial Engineering
25 Ave. de la Justice Gombe
Boite Postale 10976
KINSHASA
Tel: 32 063, 32 633, 28 251
Telex: 21552
Fax: 22 850

ZAMBIA

R.J. Tilbury (Zambia) Ltd.
P.O. Box 32792
LUSAKA
Tel: 21 55 80
Telex: 40128

ZIMBABWE

Field Consolidated (Private) Ltd.
Systron Division
Manhattan Court
61 Second Street
P.O. Box 3458
HARARE
Tel: 73 98 81
Telex: 26241
Fax: 70 20 08

Please send directory corrections to:
Test & Measurement Catalog
Hewlett-Packard Company
3200 Hillview Avenue
Palo Alto, CA 94304
Tel: (415) 857-4706
Fax: (415) 857-3880

September 1989